KANON LOADING EQUIPMENT	End User: GASCO Egypt Order: 4500000845 - SUMED	Kanon reference P242068 Front

INSTALLATION, OPERATING and MAINTENANCE manual

Marine Loading Arm

2x270 +ERC+QCDC
16”

Marine Loading Arm

Kanon Loading Equipment B.V.
P.O. Box 385
3840 AJ Harderwijk
The Netherlands

Phone : +31 36 52 19 777
Fax : +31 36 52 19 770
E-mail : kanon@kanon.nl

Preface

This Installation, Operating and Maintenance manual must be used according to the national valid legalisation. It must be seen as an element of the machine and must be, as required by the valid legalisation, preserved till dismantling. If the machine is provided to a third party the original Installation, Operating and Maintenance manual should be provided with the machine.

The Installation, Operating and Maintenance manual must be kept, by the owner or performing institution, on the workplace in a safe, dry and shadowy place. It must always be available for consulting. One copy of the electric-, pneumatic-, or hydraulic scheme (if applicable) must be kept in the control box for fast consulting.
If damaged, a user must order a new sample of this Installation, Operating and Maintenance manual at KANON Loading Equipment B.V..

The Installation, Operating and Maintenance manual must be carefully read prior to starting any work!

This manual is compiled of both general and project specific documents. Where references are made to drawings in general documents, __ is used as reference to the project nr in the drawing names, for instance as in P__A05.

Models shown in procedures may differ from actual supply.

© KANON Loading Equipment B.V. NL 2025

All rights reserved. This manual is confidential and the information contained herein is a confidential disclosure. No part of this manual may be reproduced or copied by any means (graphic, electronic or mechanical, including photocopying, recording) without the written permission of KANON Loading Equipment B.V.

Procedures described in this manual may be subject to changes. KANON Loading Equipment B.V. reserves the right to revise procedures provided in this publication without the obligation to notify any person or organisation about such revision or change.

1. Guide to Directives

Certificate of approval Quality management system	ISO 9001:2015
Marine loading arm MLA General safety requirements	002-001-000-00

2. Transport, Installation and storage

Technical data MLA 270 CNG	
MLA Terminology	002-002-020-00
Installation plan MLA concrete	002-002-000-00
Installation plan MLA steel structure	002-002-021-00
Instructions dummy manifold	002-002-029-00
Installation plan	P242068A01
Lifting & installation plan Triple Assembly	INSTRIP
Adjustment ballance	002-006-033-00
Storage recommendations	002-002-034-00
General requirements for tightening bolt and nuts	000-000-002-00
Cleaning the outside of the MLA	002-002-001-00

3. Operating Instructions

General instructions for operation and maintenance MLA	General
Description Operating Envelope hydr. operated with ERC	OPE ENV1
Operating envelope	P242068A09
Operating instructions MLA 270 Hydraulicly operated	002-003-016-00
Hydraulic locking device MLA with ERC	002-003-004-00
General instructions hydraulic system	HYD
Instructions to connect	260075
Locking device & maintenance device inboard, description & operating	002-003-000-00
Support jack instructions	002-003-015-00
Operating Flow Chart	PFC
Narative explanation start-up and use of the control panel	NAR
Purging and flushing CNG Loading arm	002-006-037-00

4. Quick Connect / Disconnect Coupler

Installation,operating and maintenance Manual Hydraulically Operated (Adaple) CNG QCDC	014-999-003-00
Connecting with the QCDC.	014-999-004-00

5. Emergency Release Coupler

Operating & Maintenance manual for Emergency Release Coupler	MIB
Installation of an ERC before or after the FSU arrived.	015-006-005-00

6. Maintenance & Repair

Warranty conditions Maintenance & Repair	Warr-MLA
Maintenance	
Swiveljoints CNG 242068	002-006-040-00
Maintenance, lubrication scheme & grease MLA single riser single inboard	LUB
Summary maintenance / preventive schedule MLA CNG	002-006-025-00
Summary maintenance / preventive schedule MLA	002-006-016-00
Lubrication points MLA270 CNG	002-006-038-00
Maintenance instructions swivel joint SHP834 DN 400	082-006-004-00
Information about grease and hydraulic oil	002-999-001-00
Maintenance instructions hydraulically operated CNG MLA 270	002-006-039-00
Position for inspection, maintenance or repair of the triple with ERC	002-006-011-00
Repair	
Instructions to replace insulation flange or insulation spool	002-006-015-00
Instructions for lifting bridge	002-006-006-00
Aligning sliding brackets	002-006-002-00
CNG 270 MLA swivel 1 repair	002-006-036-00
Replacing product seal swivel 2 CNG MLA 270	002-006-035-00
Inspection or repair of swivel 4, 5 and 6 CNG loading arm	002-006-037-00

7. Final drawings as built

Declaration drawings as Built	
Design data	P242068A05
Baseload diagram	P242068A06
Baseload Diagram	P242068B06
Jetty layout	P242068A08
MLA270 General Arrangement	P242068A10
MLA270 General Arrangement	P242068B10
Triple assembly	P242068A11

8. Appendages

Operating and maintenance manual Ball valve	Gefa
Operating and maintenance manual Non Return valve	Gefa
Operating and maintenance manual Ball valve	JC
Radio receiver FSE726	HBC
Radio remote control spectrumEEX	HBC
Radio receiver RX-HL	Hetronic
Radio remote control EX manual + NOVA XL datasheets	Hetronic
Datasheet Proximity switch NJ4-12GK-N-5M	Pepperl & Fuchs
Instruction manual Proximity switch NJ4-12GK-N-5M	Pepperl & Fuchs
Datasheet Proximity switch NJ10-30GK-N-15M	Pepperl & Fuchs
Instruction manual Proximity switch NJ10-30GK-N-15M	Pepperl & Fuchs
Liquiphant	Endress & Hauser
Nivotester	Endress & Hauser
Safety guard and ladders	SÖLL/MILLER

9. Hydraulic electric system

Electrical Wiring Diagram	P242068A91
P&ID	P242068A92
Cause & effect diagram	P242068 CE
Hydraulic diagram valve block	P242068A95
Hydraulic scheme for powerpack	P242068A96
Dimensional drawing powerpack	P242068A97
Dimensional drawing of valve block	P242068A98
Functional design specification	P242068FDS
General IOM instructions for Hydraulic Power Units and Assemblies	DOEDIJNS

KANON
LOADING EQUIPMENT

Installation, Operating and Maintenance manual

Section 1

Current issue date: 1 February 2024
Expiry date: 31 January 2027
Certificate identity number: 10561994

Original approval(s):
ISO 9001 - 21 January 2000

Certificate of Approval

This is to certify that the Management System of:

Kanon Loading Equipment B.V.

Edisonweg 27, 3899 AZ Zeewolde, The Netherlands

has been approved by LRQA to the following standards:

ISO 9001:2015

Approval number(s): ISO 9001 – 0025269

The scope of this approval is applicable to:

Design, management of production, installation, repair and maintenance of loading and unloading systems for fluids and gases, including safety access systems.

Paul Graaf

Area Operations Manager, Europe

Issued by: LRQA Limited

UKAS MANAGEMENT SYSTEMS
0001

LRQA Group Limited, its affiliates and subsidiaries and their respective officers, employees or agents are, individually and collectively, referred to in this clause as 'LRQA'. LRQA assumes no responsibility and shall not be liable to any person for any loss, damage or expense caused by reliance on the information or advice in this document or howsoever provided, unless that person has signed a contract with the relevant LRQA entity for the provision of this information or advice and in that case any responsibility or liability is exclusively on the terms and conditions set out in that contract.
Issued by: LRQA Limited, 1 Trinity Park, Bickenhill Lane, Birmingham B37 7ES, United Kingdom

1.0 Introduction

This document shall be used as general reference. All instructions shall be thoroughly reviewed by user. The specific safety requirements are in the specific instructions.

2.0 Before accessing the site

NOTE; when Kanon arranges transportation, a Kanon supervisor or experienced Kanon contractor shall always be present.

WARNING; all personal protection is to local requirements.

3.0 Installation & commissioning

3.1 Preparation

All instructions to install the MLA can be found in section “Installation and Commissioning”.

WARNING; Lifting the complete MLA may only be done on the red lifting lugs.

Figure 1 Sticker on MLA points prohibited for lifting

Figure 2 Painted on TSK point prohibited for lifting

WARNING; lifting where the symbol of figure 1 and / or figure 2 shows is prohibited.

WARNING; installation of the MLA shall always be supervised by a Kanon service engineer.

WARNING; a newly delivered MLA shall not exceed 80 dB(A).

WARNING; wear a safety harness / guide / rope when climbing the MLA.

WARNING; locking device levers shall be in upwards position to lock inboard on riser.

WARNING; the pins maintenance devices shall be installed in reverse position.

3.2 Lifting

NOTE; the center of gravity is clearly marked

Figure 3

WARNING; stay clear from the lifting area.

WARNING; it is inevitable that the Kanon service engineer will be under the load for a short period of time.

WARNING; be sure there is enough clearance to manoeuvre the MLA into position.

CAUTION; ensure there is enough clearance underneath the baseplate.

3.3 Installing the MLA

NOTE; ignoring the instructions can void the warranty.
NOTE; installing the MLA without supervision of a Kanon service engineer will void the warranty
NOTE; installing anchors and additional civil work is always the responsibility of the client.

WARNING; installing shall be executed in accordance with:

- Kanon instruction:
  - 002-002-001-00 Marine loading arm installation plan".
- Drawings :
  - P__06 "Base-load diagram".
  - "MLA-template".
  - "Anchor detail-plan".

NOTE; installing anchors and additional civil work is always the responsibility of the client.
WARNING; installing shall be executed in accordance with:

- Kanon instruction:
  - 002-002-001-00 Marine loading arm installation plan".
- Drawings :
  - P__06 "Base-load diagram".
  - "MLA-template".
  - "Anchor detail-plan".

3.4 Installing hydraulics and electrics

WARNING; connecting hydraulics and electrics shall be executed in accordance with:

- Kanon instruction:
  - "002-002-001-00 Marine loading arm installation plan".
- Drawings and schemes:
  - P__95, 96, 97 & 98 (hydraulics).
  - P__91 (electrics).

NOTE; drawings and schematics are part of section "Hydraulic electric system" or of a book named "Hydraulic and electric system".

3.5 Commissioning

NOTE; commissioning the MLA shall always be done by a Kanon field service commissioning engineer.

NOTE; operators and site service engineers are required to attend an operator training.

Any follow up training after, can be done by:

- a trainer who has attend the operating training by a Kanon trainer.
- a Kanon field trainer.

NOTE; Operation of the MLA only to be done by a trained professional.

4.0 Operating of MLA

The MLA is an enclosed and safe connection between an on-shore storage facility and a ship. The MLA shall only be used to (un)load the liquid for which it is designed.

4.1 Windspeeds

WARNING; operation / stored

- **Normal operation:** the maximum wind speed shall be lower than 22 m/s during mooring (connecting/disconnecting) the MLA,
- **Windspeeds above 22 m/s:** wind speeds over 22 m/s, the pins maintenance devices inboard shall be installed in reverse position

WARNING; maintenance

- **General maintenance:** upto 10 m/s
  Swivel seal replacement: upto 8 m/s

WARNING; the MLA shall never be used for:

- lifting any objects.
- (un)loading of granulates.
  transporting people.

WARNING; the design and intend of use of the MLA is for:

- a static position, when not mounted on a trolley.
- a particular location.
- a prescribed operating range.
  a particular medium.

WARNING; only the operator shall operate the MLA.

5.0 Maintenance, Repair and Warranty

5.1 Safety warnings for maintenance and repair

WARNING; during maintenance, only the service engineer shall operate the MLA.

WARNING; During maintenance the area around the loading arm will be secured.

WARNING; the MLA shall not be climbed without the safety garment

WARNING; during maintenance the inboard shall always be mechanically locked

WARNING;

- activate hydraulic lock.
- turn off hydraulic power pack.
- lock start-switch in off position.
- advise to use “log-out-tag-out” procedure (LOTO).

In case of any questions please contact the Kanon Loading Equipment Service Department +3136 521 97 77.

5.2 Warranty

Invalid warranty claims:

- the repair procedure has not been followed.
- the instructions of Kanon Loading Equipment are ignored
- repairs are made by third parties, which are not appointed by Kanon Loading Equipment.

6.0 Disassembly and disposal of MLA(`s) and / or components

6.1 Disassembly and disposal

If a MLA is at end of lifetime make sure the:

- product is flushed and collected.
- hydraulic lines are flushed.
- electric power is disconnected.
- product lines are blinded off.
- hydraulic fluids are drained and collected.

NOTE; the MLA shall be unplugged or disconnected from main electricity supply.

Electrical, electronic and hydraulic appliances contain materials potentially hazardous to human health and environment., please dispose of properly.

KANON
LOADING EQUIPMENT

Installation, Operating and Maintenance manual

Section 2

Technical data MLA 270-16" with ERC and QCDC.

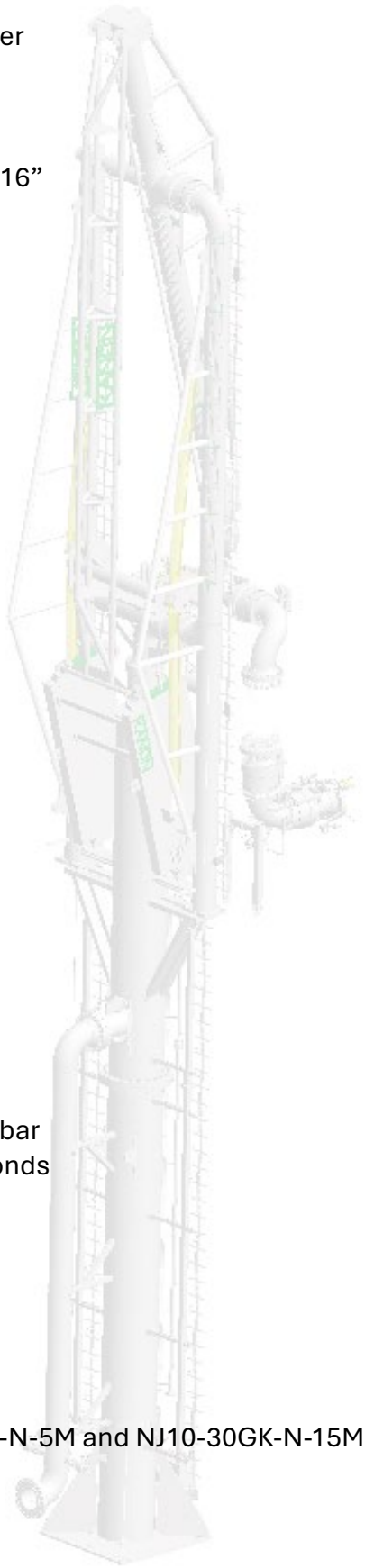

Total height MLA; 26,671 meter
Total weight MLA ; 47.500 kg
Weight Triple Unit ; 4642 kg
Weight ERC :437 kg
Diameter connecting flange ;16"

Hydraulic Power Pack
Tank 120 liter
Oil Shell Tellus S2 V32
E-motors 11 kW at 400 V.
control voltage 24V
p nom 200 Bar at 27 liter/min
p min.135 Bar
Filter 10 micron
Return filter 25 micron

Accumulator
Contents10 dm3
p nom. 135 bar

QCDC.
Hydr. output 140 Bar
Oilflow 20 liter/min
4 Claws

ERC.
Hydr. pressure140 Bar
Design pressure 250 bar
Test pressure 325 Bar
Total weight1437 kg
Gas side pressure 77 Bar
Gas side test pressure 115.5 bar
closing time valves 5-30 seconds
Release time max 2 seconds

Electrics
Supply 400V/25 A
Mains 230 V/10 A
Safety 24 Volt/2A

Proximity switches NJ4-12GK-N-5M and NJ10-30GK-N-15M

Accumulator; A pressure storage reservoir in which a non compressable fluid is held under pressure by an external source e.g a piston or nitrogen contained in a bladder.

Apex; Highest point of the MLA, Inboard and outboard arm connect here.

Apex alarm; Detects the maximum angle between the inboard and outboard arm.(maximum reach).
The proximity switches are installed near the counterweights.

Apex angle; Or included angle is the angle between inboard and outboard arm.

Apex swivel; The articulated fluid carrying joint located between the inboard arm and the outboard arm. Located at the apex.

Attitude; The various modes of use and/or location of the MLA (manouevering, stowed, connected, washng, hydrostatic, test and maintenance.There can be many positions for each attitude.

Baseplate; Also known as foundation plate, is the plate securing the MLA to the jetty.

Blowdown valve (BDV); A valve or system of valves that , when activated, initiates a blowdown of a pipeline, plant, proces, or platform similar to an emergency shutdown valve (ESDV) that shuts in a pipeline, the BDV opens a pipeline.

Brinelling; The permanent deformation of the ball races in the swiveljoints. If the deformation is over 8% of the ball diameterwe speak of brinelling.

Bunkering; A fuelling operation that involves the transfer of fuel. Ships of any size may be involved in bunkering.

Bunkering vessel; A ship, boat or barge used to transport fuel to a ship.

Cavitation; The formation or collapse of gas bubbles in a liquid when the pressure falls to or below the liquid vapour pressure that can damage equipment.

Clash; Any contact between:
MLA's, or an MLA and adjacent equipment, when in normal operation, stored or during maintenance.
Adjecent sections of the same arm,e.g.the triple swivel and outboard arm.
Between MLA's following an emergency seperation.

Column seperation; The development of a significant vapour cavity in a liquid flow.

Contact angle; The angle between the plane of the swivel joint structual bearing balls or rollers and the center of contact at the ball or roller raceway.

Control center; The control center located on or near the jetty that is used to monitor the MLA's.

Counterweight; Section of the loading arm that balances the arm in every position. Situated at the short end of the inboard arm.

Envelope; The three dimensional space or pocket that encompasses all MLA positions in which the ships manifold can be located during operations and in an emergency.

ERC; Emergency Release Coupler. Generates a disconnection of the loading arm from the ship in case of an emergency. The ERC consists of two valves clamped together, which are closed before disconnecting. This way the spill is limited to an absolute minimum.

ERC alarm; Is the second stage alarm with proximity switches, which indicates that the maximum mechanical reach is nearby.The ERS is activated and takes care of automatic disconnection before mechanical damages occur. The alarm is made visible and audible by a flashing light and horn with continuous tone.

ERC lock; This is a block valve that prevents accidental ERC activation.

ERS; Emergency release system Guards, starts and controles the emergency release system including the ERC.

Floating liquified natural gas facility (FLNG); A floating unit for the production, liquefaction, storage and transfer of LNG.These units can receive gas from offshore fields, onshore fields, onshore pipelines or other facilities.

Floating storage and regasification unit (FSRU); A floating unit for the storage and regasification of LNG for sending out to a natural gas grid or a designated customer. An FSRU is intended to be moored or anchored for extended periodes as part of an LNG terminal located in a protected harbour, near shore location or in some cases an exposed offshore jetty.

Fluid; Any substance that flows through an MLA.This includes crude oil, refined and chemical product, liquified gasses, vapour and ballast water.

Freeboard; The vertical distance between the ships deck and the waterline at the manifold.

Freewheeling; Operation mode in which the loading arm can move freely, also known as the floating position. The loading arm will follow the movement of the ship while connected.

Hazardous area; An area on shore which, for the purpose of the installation and use of electrical equipment , is regarded as dangerous. Such hazardous area's are graded in Hazardous zones depending upon the probbility of the presence of a flamable gasmixture.

Hydraulic lock; This is a combination of 3 block valves, fitted together as an "aircraft fuel handle" fitted in the hydraulic lines of the drives cylinders. They are located at the base of the riser. In locked position effects of wind, hydraulic pressure, unbalance etc. will have no influence on the loading arm.

Hydraulic Power Unit (HPU); A unit that generates hydraulic power to enable the normal operation and emergency release sequence of the arms.

Inboard Arm; Fitted between the riser and the outboard arm containing the product pipe and the counterwheights.

Inboard drive; Cylinder(s) for the up and down movements of the loading arm.

Installation, operating and maintenance Manual (IOM); This manual shall be used for :
- Installing the MLA
- Operating the MLA
- General maintenance by the on site maintenance crew.

Insulating Flange; An electical insulating flange is used to prevent stray current and electricaly isolate ship and shore. It is installed in the lower end of the outboard arm or in the vertical part of the triple assembly.

Locking Device or Parking lock; Mechanical/ hydraulic device to secure the loading arm in stored position.

Lock out, tag out (try out) LOTO (TO); A proces of installing locks and tags at points of isolation to disable equipment preventing potentialy dangerous situations and the release of hazardous energy while personnel perform repair or maintenance activities.

Maneuvering; Operational mode in which the loading arm can be hydraulically operated from a control panel, pendant or radio control.

Manifold; The flanged pipe assembly mounted onboard a ship to which the presentation flange or the QCDC of the MLA connects.

Manifold height; The vertical distance between the ships manifold and the water level.

Manifold setback; The horizontal distance between the outboard side of the ship and the face of the cargo manifold.

Manifold spacing; The horizontal distance between two adjecent manifold flange centers.

Marine loading arm; Mechanical device used to transfer liquid or liquified gasses between a shore based pipeline and a ship or barge.

Operating envelope; This is the working area of the loading arm. The dimensions of the loading arm and the surroundings of the loading arm determines the area.

Outboard arm; Part of the loading arm that connects the inboard arm with the triple assembly.

Outboard drive; Cylinder for the ship/shore movements of the loading arm.

Pantograph or parallel structure; Connects the outboard arm to the counterweights. This connection enables the parallel movement of the counterweight and outboard arm.The pantograph is essential for the balance of the MLA.

Parcel; A volume of product for transfer from ship to shore or vice versa.

Powered emergency release coupling (PERC); A powered device to quickly release the MLA in an emergency.

Pre-alarm; The 1st stage alarm that indicates the limits of the operating envelope are near. This will trigger a flashing light and an intermittent horn signal.

Presentation flange; the MLA flange for connecting to the ships manifold or a spool piece.

Proximity switch; Solid state switch (sensor) used for detection.

Riser or standpost; The fluid carrying vertical structural member that supports the MLA assemblies .Also known as the stem.

Rotation drive; Cylinder for the sideways movements (slewing).

Safety fork; To prevent falling over of the lower part of the ERC after emergency seperation and for easy reassembly.

Stage alarm; Aalrm that is activated at specific stages such as when a position or limit is reached during operation.

Stay bolt; Bolt used to support the inboard while replacing the product seal in swivel 2.

Stowing; Returning the MLA **to** the starting position where it is locked and secured when not in use or for maintenance and repairs.

Strong block: spacer used for safety when replacing product seals of swivels.

Support jack; Is mounted under the triple assembly and has adjustable legs. The additional weight of the transported product in the arm is absorbed by the ships deck.

Swivel joint; Allows the MLA to rotate or move where it is needed. A swivel joint is a leak free construction of pipes and elbows.

Vacuum breaker; System that allows airflow through a ball valve or non return valve at the apex, draining the outboard arm.

Triple assembly; Consists of 3 swivel joints, ERC,QCDC, and presentation face, is situated at the end of the outboard arm.

1.0 Introduction

This instruction describes how to lift an MLA on / from truck, semi-trailer or a skid.
The preparations on the jetty before installation of the MLA as well as the preparations for installation of electric and hydraulic components are included.

1.1 Relevant drawings

Installation and lifting plan P_01.

1.2 Safety requirements

Please read Kanon instruction "002-001-000-00, General safety requirements MLA" thoroughly.

1.3 Lifting definitions

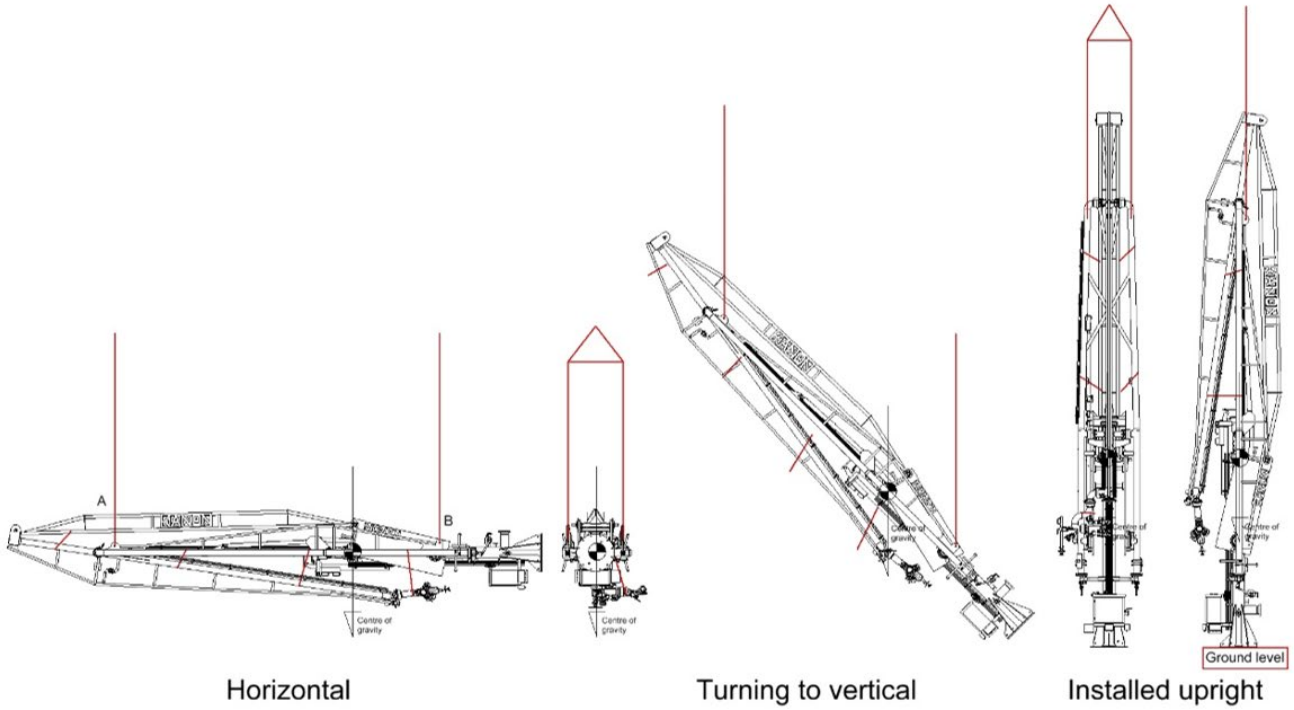

Figure 1

2.0 General data and equipment for installation

MLA will be transported on a truck in horizontal position.

Total weight of MLA: see drawing P_01.

Lifting lugs are designed for service class 0 (design category A) according to ASME BTH-1-2023.

Equipment:

- Required number of cranes: 2
- D- or H- shackles shall have a “green pin” quality or better.
- Bolt diameter H-or D-shackle:
    - ø38 mm. for hole lifting lug ø41 mm.
    - ø42 mm. for hole lifting lug ø45 mm.
    - ø57 mm. for hole lifting lug ø60 mm.
- Lifting cables or slings in several lengths.
- Straps in several lengths.

3.0 Lifting points

The MLA shall be transported and horizontally lifted with the triple pointing down.
The triple pointing up is an option at request of the client.

- Two lifting lugs at bottom side of the inboard. See P_01, point AA.
- Two lifting lugs at top side of the inboard arm. See P_01, point BB.
- Lifting lugs are marked in a different bright colour.

WARNING; lifting the complete MLA may only be done on the lifting lugs of a different painted color.

WARNING; for very specific work it is inevitable that the Kanon service engineer will be under the load for a short period of time.

WARNING; During lifting of the loading arm we will secure the area around the loading arm.

Figure 2 Sticker on MLA points prohibited for lifting

Figure 3 Painted on TSK point prohibited for lifting

WARNING; lifting at the lifting lugs where the symbol of figure 2 and / or figure 3 is added is prohibited.
Can only be used for lifting at approval of a Kanon service engineer!

4.0 Pins parallel structure

Pins to connect the outboard and the parallel structure. See P_01 sheet 1, detail FF and figures 4, 5 and 6.

WARNING; before lifting the MLA: on both sides of the riser the “pin maintenance device inboard” shall be installed in reverse (locked) position and the locking device shall be locked. See P_01, detail CC.

NOTE; to secure the inboard to the outboard, apply straps around the inboard arm / outboard arm, and around the inboard arm / triple assy.

NOTE; in case of any doubt please contact Kanon Loading Equipment: +31 36 52 19 777.

5.0 Lifting plan from truck

5.1 General

See P_01, sheet 1.

There are two sets of lifting points:

- Lifting lugs at top of the inboard MLA. See P_01, sheet 1, point BB.
- Lifting lugs at bottom of the inboard arm. See P_01, sheet 1, point AA.
- For each crane a spreader shall be used.

- Have a spreader available with a width as mentioned at P_01, sheet 1, point AA and sheet 2, distance EE at lifting lugs set inboard parallel to riser top.
- Have a spreader available with a width as mentioned at P_01, sheet 1, points BB and sheet 2, distance DD at lifting lugs set inboard to inboard.
- Use two lifting cables / slings per spreader.
- For length requirements cables / slings see P_01, distance CC + 250 mm.

CAUTION; the cables of the cranes shall be free of the MLA in any position.

5.2 When lifting MLA from truck semi-trailer.

Lift the MLA from its truck semi-trailer supports. The truck semi-trailer supports can be re-used to store the MLA.
When MLA is installed, on truck semi-trailer supports should be sent back to Kanon Loading Equipment.
When truck semi-trailer supports are needed for storage of the MLA, please contact Kanon project manager and make arrangements.

5.3 When skid is used

Remove upper part of pipe clamps from the skid supports, so the MLA can be lifted.
Lift the MLA from the supports.

6.0 Placing and securing pins of the parallel structure

6.1 Situation sketch

Truck with MLA arrives on site where the MLA shall be lifted following procedure point 6.2 till 6.4.

6.2 Procedure

1. Lift the MLA from the supports.
2. Place a standard wooden pallet on the floor underneath the triple.
3. Lower the MLA until the end of the outboard with the triple rests on the pallet.
4. Check if straps, which secured outboard and triple to inboard, are free of tension.
5. When the straps are free of tension they can be removed and replaced by two chain hoists.

6. Lift the MLA so the outboard is horizontal (base plate up, apex down). The connecting point at the top of outboard and parallel structure is now accessible.
7. Lift the parallel structure and fill the space underneath with pieces of wood until the connection holes in outboard and parallel structure are aligned.
   When necessary, lift the base plate and lower the apex. Use the chain hoists on the outboard to align the holes in outboard box and parallel structure.

6.3 Positioning of the pins.

For the next steps see: P_01 sheet 1, detail FF and figures 4, 5 and 6.

1. Position the V-rings, see figure 4.
2. Grease both pins with Kroon LITHEP Grease EP2.
3. Install the pins.
4. Lock the pins with the lock plates, see figures 5 and 6.

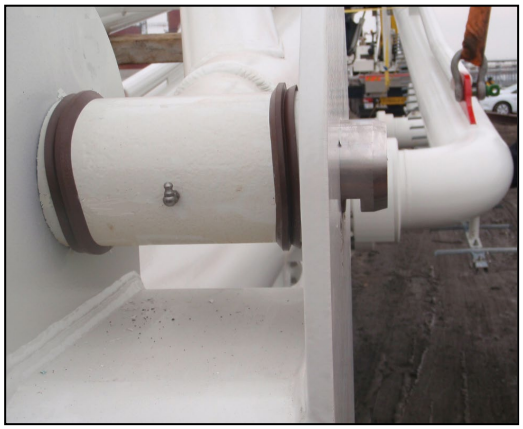

Figure 4

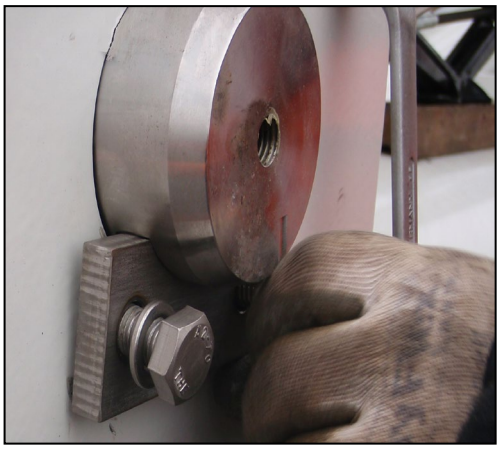

Figure 5

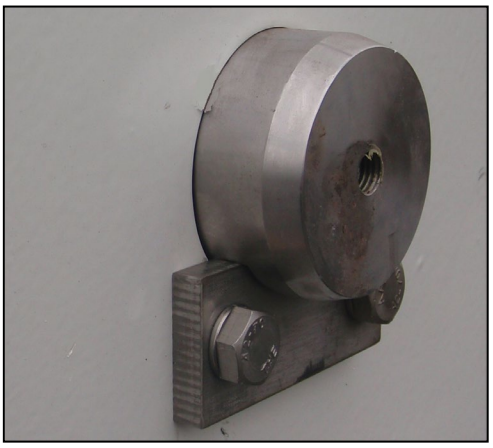

Figure 6

6.4 After placing the pins

1. Use straps and chain hoists to strap the outboard and triple again.
2. When the outboard is secured, remove the chain hoists.

WARNING; check again if the pins are installed correctly and locked with lock plates.

3. Follow the erection plan to erect the MLA. See P_01, sheet 2.

NOTE; in case of any doubt please contact Kanon Loading Equipment: +31 36 52 19 777.

7.0 Installation plan (installing MLA on Jetty)

For the installation procedure see P_01 sheet 2

1. Lift MLA in a horizontal position with both cranes.
2. Slowly lower the base plate until the MLA is in an upright position.
3. Remove straps at this position See P_01, sheet 1.
4. Manoeuvre MLA to the correct position over jetty foundation.
5. Install MLA in the upright position on the foundation.
6. Tighten anchor nuts on the base plate.

NOTE; In case of any doubt please contact Kanon Loading Equipment: +31 36 52 19 777.

8.0 Preparation and set up on concrete

8.1 General

The length of the anchor bolts and concrete foundation on jetty shall be calculated by clients civil engineer. See drawing P_06 in section “Drawings as Built” for Baseload diagram.

8.2 Anchors and grouting

The lower levelling nuts of the anchor bolts shall be levelled with a spirit level, before placing the MLA. Please check level after placement of the MLA. If necessary, re-level the MLA with the lower levelling nuts.

NOTE; if it is not possible/ permitted to install the MLA on the nuts of the anchor-bolts, use shims, or contact Kanon Loading Equipment: +31 36 52 19 777.

After placement of the MLA there shall be a formwork made around the baseplate. This formwork shall be filled with shrink resistant mortar see figure 7.

NOTE; filling the formwork with shrink resistant mortar grout shall be done **max. 1 week after placement of the MLA**.

NOTE; placing the anchors and other civil work is always responsibility of the client.

NOTE; not following the advices for installation of the MLA, can have consequences for the warranty.

Installation shall be executed in accordance with drawings:

- P_06 “Base-load diagram”, in section “Drawings as Built”
- “MLA-template”
- “Anchor detail-plan”

The instruction and anchor bolt plan drawing are part of section “Transport, Installation, Commissioning and Storage” in this manual.

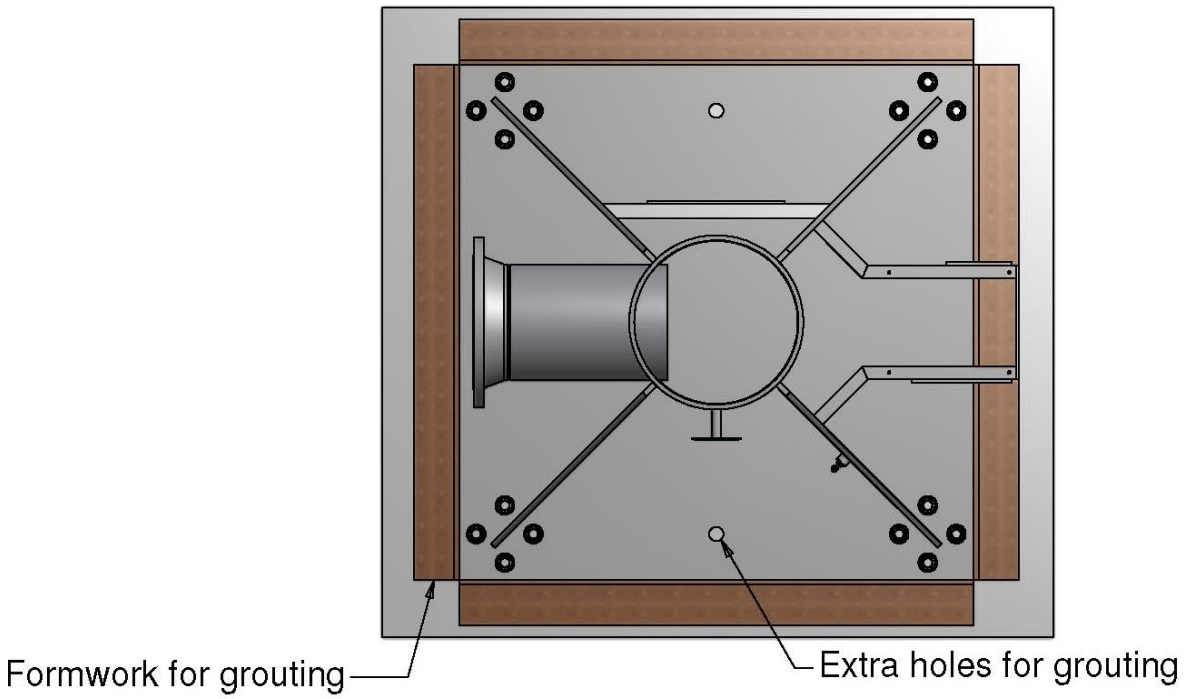

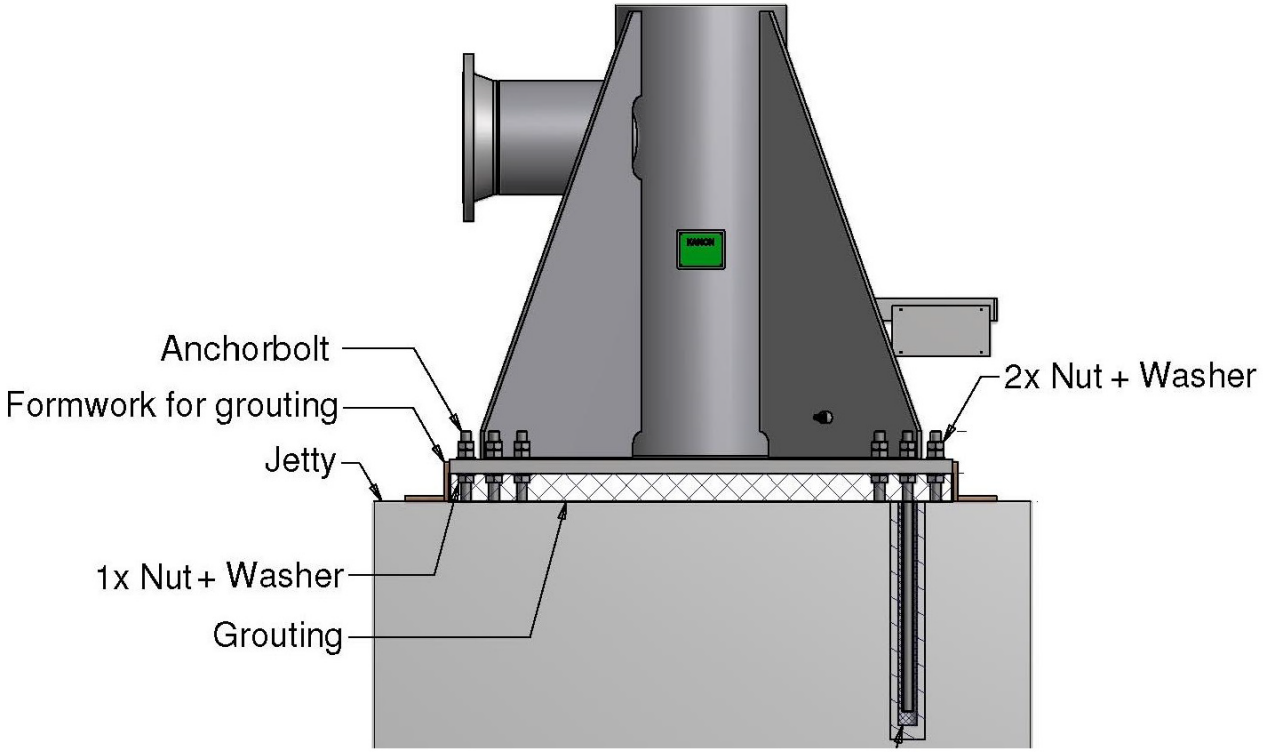

Figure 7

8.3 Hydraulic

- In order to connect the hydraulic pipework Kanon Loading Equipment, requires client to hire a specialized company that has experience with similar project and is capable to install hydraulics according ISO 4413:2010. For information about connection of hydraulic pipework see section “Appendages” in the manual. When necessary Kanon can advice in this matter.
- If applicable:
  When connecting use drawings P_95, P_96, P_97 and P_98.
  These drawings are to be found in section “Hydraulic and electric system” of the IOM, or in the separate book “Hydraulic and electric system”.
- Use proper stainless steel 316L hydraulic tubes and fittings of brands like Parker, EMB or equivalent. Hydraulic equipment shall be suitable for a minimum working pressure of 250 Barg.
- Prior to start-up, the flushing and subsequent cleanliness check has to be carried out, in accordance to range code 18/ ISO 4406.

8.4 Electric

- In order to connect the electric system Kanon Loading Equipment requires client to hire a specialized company that has experience with similar projects. When necessary Kanon can advice in this matter.
- When connecting, use schematic P_91.
  This schematic is part of section “Hydraulic electric system “of the IOM or the separate book “Hydraulic electric system”.
  Kanon advices to use cable trays, for the exact cable trays and an experienced company that has done similar projects Kanon can advise.

It is possible to install both hydraulic and electric lines in the cable tray, but they shall be installed separately on the cable tray, see figure 8.

Figure 8

1.0 Introduction

This instruction describes how to lift an MLA on / from truck, semi-trailer or a skid.
The preparations on the jetty before installation of the MLA as well as the preparations for installation of electric and hydraulic components are included.

1.1 Relevant drawings

Installation and lifting plan P_01.

1.2 Safety requirements

Please read Kanon instruction "002-001-000-00, General safety requirements MLA" thoroughly.

1.3 Lifting definitions

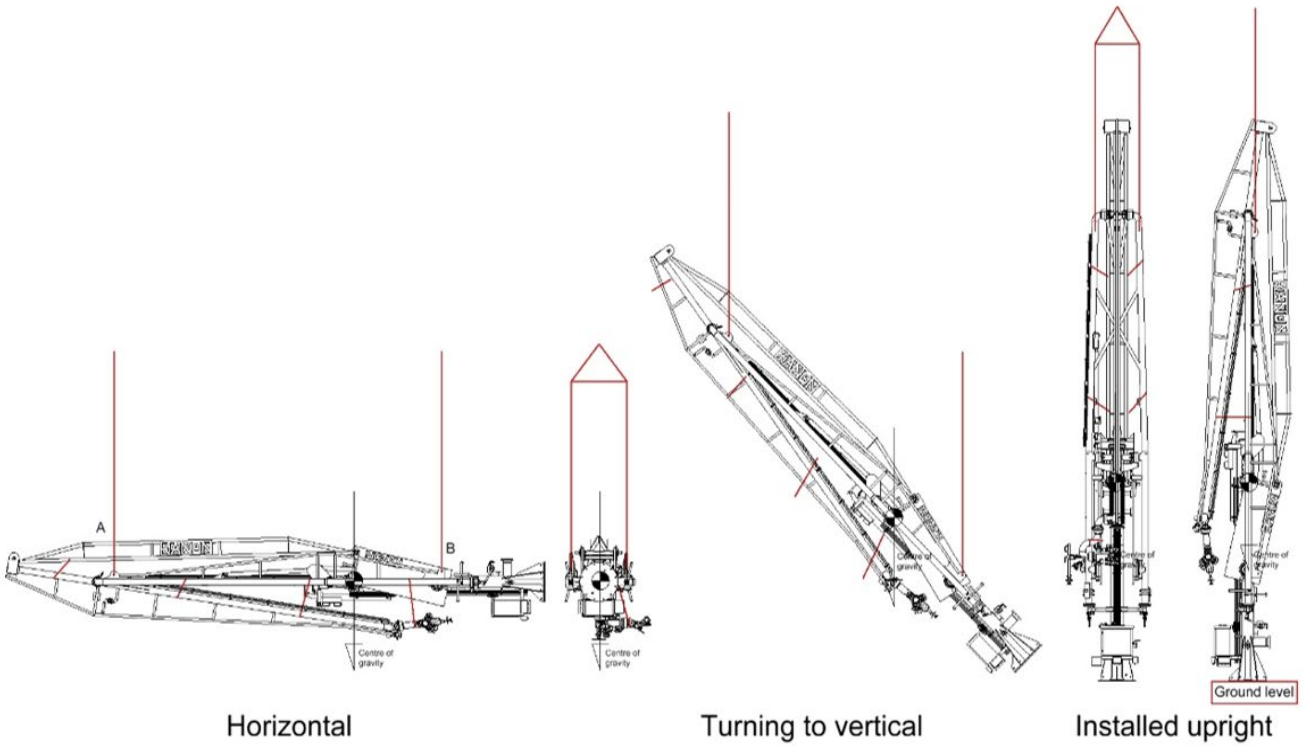

Figure 1

2.0 General data and equipment for installation

MLA will be transported on a truck in a horizontal position.

Total weight of MLA: see drawing P_01.

Lifting lugs are designed for service class 0 (design category A) according to ASME BTH-1-2023.

Equipment:

- Required number of cranes: 2
- D- or H- shackles shall have a “green pin” quality or better.
- Bolt diameter H-or D-shackle:
    - ø38 mm. for hole lifting lug ø41 mm.
    - ø42 mm. for hole lifting lug ø45 mm.
    - ø57 mm. for hole lifting lug ø60 mm.
- Lifting cables or slings in several lengths.
- Straps in several lengths.

3.0 Lifting points

The MLA shall be transported and horizontally lifted with the triple pointing down.
The triple pointing up is an option at request of the client.

- Two lifting lugs at bottom side of the inboard. See P_01, point AA.
- Two lifting lugs at top side of the inboard arm. See P_01, point BB.
- Lifting lugs are marked in a bright colour.(red)

WARNING; lifting the complete MLA may only be done on the lugs of a different color.

Figure 2 Sticker on MLA points prohibited for lifting

Figure 3 Painted on TSK point prohibited for lifting

WARNING; lifting at the lifting lugs where the symbol of figure 2 and / or figure 3 is added is prohibited.
Can only be used for lifting at approval of a Kanon service engineer!

4.0 Pins parallel structure

Pins to connect outboard and parallel structure at outboard box. See P_01 sheet 1, detail FF and figures 4, 5 and 6.

WARNING; before lifting the MLA: On both sides of the riser the “pin maintenance device inboard” shall be installed in reverse (locked) position and the locking device handles shall be upwards. See P_01, detail CC.

NOTE; to secure the inboard to the outboard, apply straps around the inboard arm / outboard arm, and around the inboard arm / triple assy.

NOTE; in case of any doubt please contact Kanon Loading Equipment: +31 36 52 19 777.

5.0 Lifting plan from truck

5.1 General

See P_01, sheet 1.

There are two sets of lifting points:

- Lifting lugs at top of the inboard MLA. See P_01, sheet 1, point BB.
- Lifting lugs at bottom of the inboard arm. See P_01, sheet 1, point AA.
- For each crane a spreader shall be used.
- Have a spreader available with a width as mentioned at P_01, point AA, distance EE at lifting lugs set inboard parallel to riser top.
- Have a spreader available with a width as mentioned at P_01, points BB, distance DD at lifting lugs set inboard to inboard.
- Use two lifting cables / slings per spreader.
- For length requirements cables / slings see P_01, distance CC + 250 mm.

CAUTION; the lifting hoists of the cranes shall be free of contact from the MLA in any position.

5.2 When lifting the MLA from truck semi-trailer.

Lift the MLA from its supports. The can be re-used to store the MLA.
When MLA is installed the supports should be returned to Kanon Loading Equipment.
When supports are needed for storage of the MLA, please contact the Kanon project manager and make arrangements.

5.3 When a skid is used

Remove upper part of pipe clamps. from the skid supports, so the MLA can be lifted.
Lift the MLA from its supports.

6.0 Placing and securing pins of the parallel structure

6.1 Situation sketch

Truck with MLA arrives at the site where the MLA shall be lifted following procedure 6.2 till 6.4.

6.2 Procedure

1. Lift the MLA from the supports.
2. Place a standard wooden pallet on the floor underneath the triple.
3. Lower the MLA until the end of the outboard with the triple rests on the pallet.
4. Check if the straps, which secured outboard and triple to the inboard, are free of tension.
5. When the straps are free of tension they can be removed and replaced by two chain hoists.
6. Lift the MLA in a position the outboard is horizontal (base plate up, apex down). The connection point at top of the outboard and parallel structure is now accessible.
7. Lift the parallel structure and fill the space underneath with wood until the connection hole in the outboard and the parallel structure are aligned.
   When necessary, lift the base plate and lower the apex. Use the chain hoists on the outboard to align the holes in outboard box and parallel structure.

6.3 Positioning of the pins parallel structure

For the next steps see: P_01 sheet 1, detail FF and figures 2, 3 and 4.

1. Position the V-rings, see figure 2.
2. Grease both pins with Kroon LITHEP Grease EP2.
3. Install the pins
4. Lock the pins with the lock plates, see figures 3 and 4.

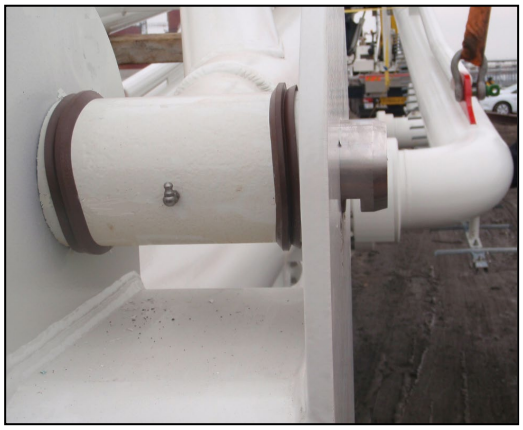

Figure 4

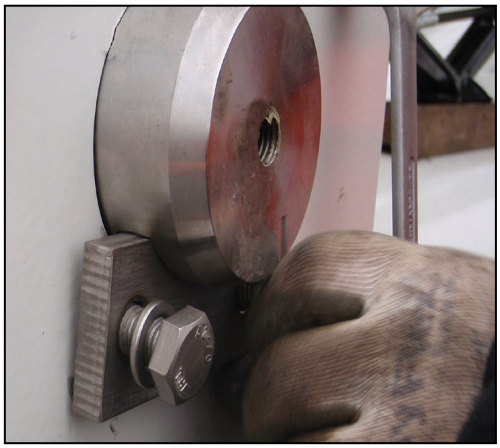

Figure 5

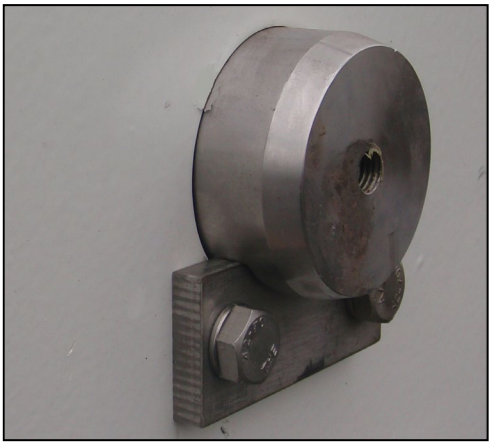

Figure 6

6.4 After placing the pins

1. Use slings and chain hoists to strap the outboard and triple again.
2. When the outboard is secured, remove the chain hoists.

WARNING; check again if the pins are installed correctly and are locked with lock plates.

3. Follow the erection plan to erect the MLA. See P_01, sheet 2.

NOTE; in case of any doubt please contact Kanon Loading Equipment: +31 36 52 19 777.

7.0 Installation plan

For the installation procedure, see P_01, sheet 2

1. Lift MLA to a horizontal position with both cranes.
2. Slowly lower the base plate until the MLA is in an upright position.
3. Remove straps at position See P_01, sheet 1.
4. Manoeuvre MLA to correct position over the foundation.
5. Install the MLA in the upright position on the foundation.
6. Tighten anchor nuts of base plate.

NOTE; In case of any doubt please contact Kanon Loading Equipment: +31 36 52 19 777.

8.0 Preparation and set up on steel structure

8.1 General

The length of the anchor bolts on the jetty shall be calculated by a client's mechanical engineer. See drawing P_06 in section "Drawings as Built" for Baseload diagram.

8.2 Anchors

NOTE; after installation of the MLA, control the levelling of the MLA with a spirit level. If necessary, use shims to relevel the MLA.

NOTE; placing the anchors is always the responsibility of the client.

NOTE; not following the advices for installation of the MLA, can have consequences for the warranty.

Installation shall be performed in accordance with drawings:

- P_06 "Base-load diagram", in section "Drawings as Built"
- "MLA-template"
- "Anchor detail-plan"

The instruction and anchor bolt plan drawings are part of the section "Transport, Installation, Commissioning and Storage" in this manual.

8.3 Hydraulic

- For connecting the hydraulic pipework Kanon Loading Equipment requires client to hire a specialized company that has experience with similar projects and is capable of installing hydraulics according to ISO 4413:2010. For information about connection of hydraulic pipework see section “Appendages” in the manual. When necessary Kanon can advise in this matter.
- If applicable:
  When connecting use drawings P_95, P_96, P_97 and P_98.
  These drawings are to be found in section “Hydraulic and electric system” of the IOM, or in the separate book “Hydraulic and electric system”.
- Use proper stainless steel 316L hydraulic tubes and fittings of brands like Parker, EMB or equivalent. Hydraulic equipment shall be suitable for a minimum working pressure of 250 Barg.
- Prior to start-up, the flushing and subsequent cleanliness check has to be carried out, in accordance to range code 18/ ISO 4406.

8.4 Electric

- For connecting the electric system Kanon Loading Equipment requires client to hire a specialized company that has experience with similar projects. When necessary Kanon can advise in this matter.
- When connecting, use schematic P_91.
  This schematic is part of the section “Hydraulic electric system “of the IOM or the separate book “Hydraulic electric system”.
- Kanon advices to use cable trays, for the exact cable trays and an experienced company that has done similar projects Kanon advise on this matter.

It is possible to install both hydraulic and electric lines in the cable tray, but they shall be installed separately see figure 7.

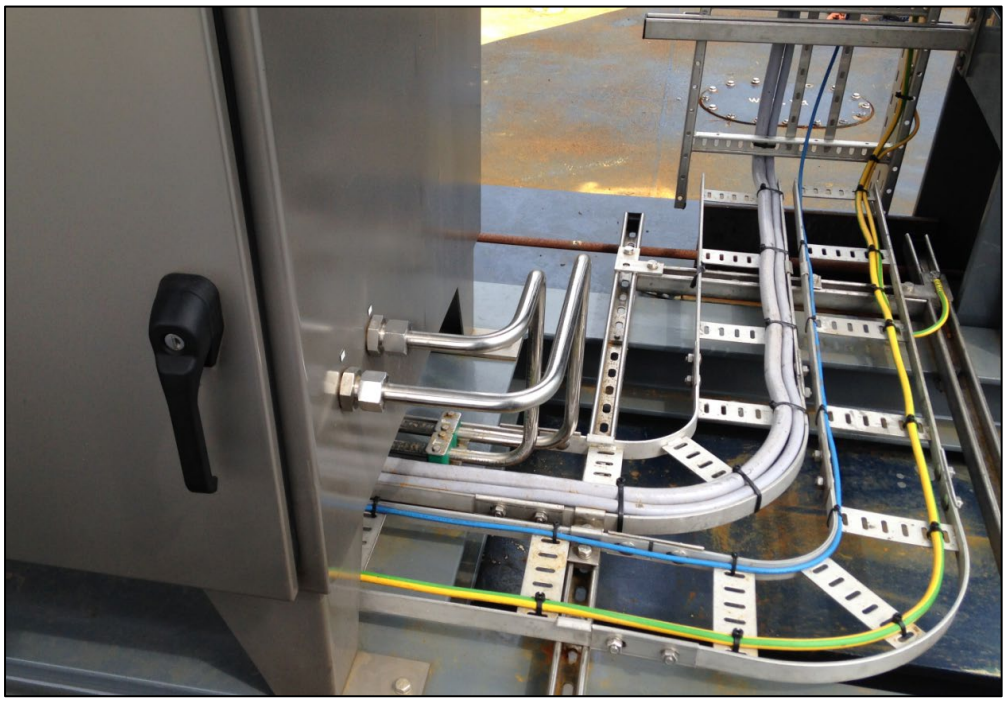

Figure 7

1.0 Introduction

This instruction gives an impression for the use of a dummy manifold.

The dummy manifold can be used for repair on triple parts by:

- Service engineers Kanon Loading Equipment BV.
- Service engineers assigned by Kanon Loading Equipment BV.

The dummy manifold shall be used by a client service engineers for easier:

- General maintenance.
- General inspection.
- Leak tests.

What is needed for the use of a dummy manifold?

- Dummy manifolds are not a standard item. Dummy manifolds are specific designed for a project related series or type of loading arms on a specific jetty.
- Enough jetty space at the front of the MLA, so a dummy manifold can be placed on the jetty and MLA can be connected (see figure 1). If a new or other dummy manifold is applicable contact Kanon Loading Equipment for advice.
- Anchor bolts shall be calculated by a civil engineer.

2.0 Safety

WARNING; when MLA is connected to dummy manifold controls shall not be used. Operating the MLA when connected to dummy manifold can cause exessif damage to MLA and dummy manifold.

WARNING; when used for repair the triple support jack shall set the triple in stable position even if parts are removed.

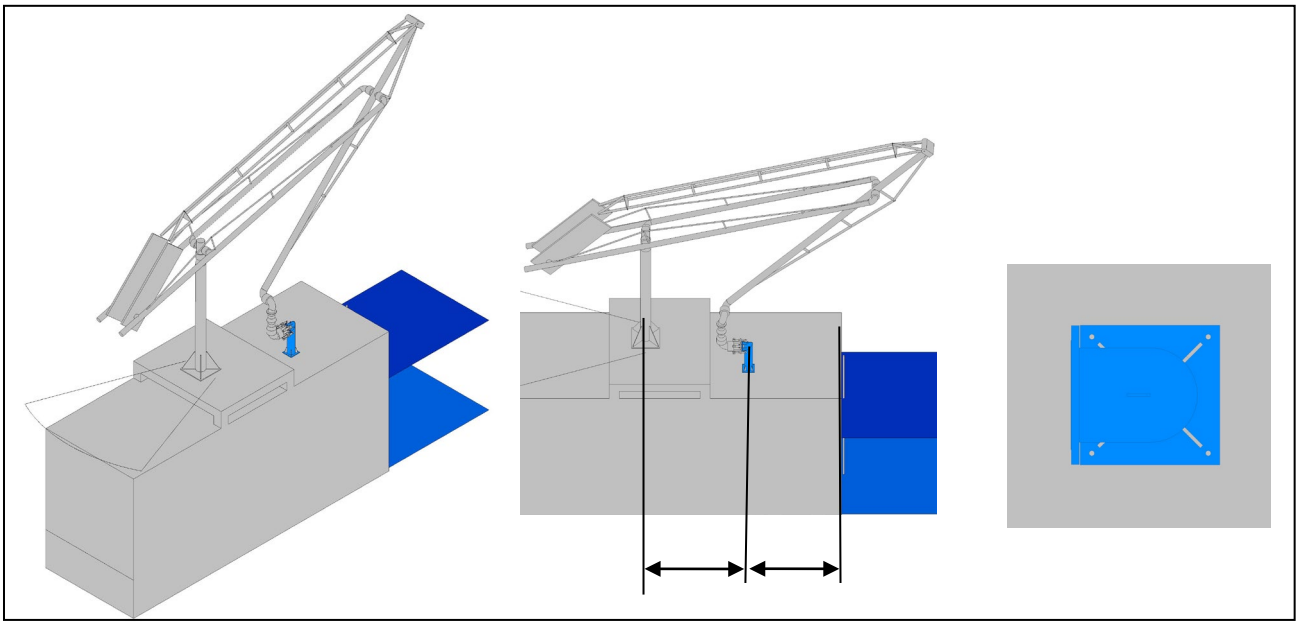

Figure 1 overview dummy manifold

Notes and remarks before assembly and lifting:
- The larger part of assembling a MLA could be lifted with one crane but advisable to use two cranes.
- For lifting and erecting a complete MLA two cranes are required.
- Measurements and centre of gravity on this document are an indication.
- Before starting lifting the actual centre of gravity should carefully be determined, in order to create a safe lift.
- Smaller parts of the MLA, which require lifting, are not indicated on this drawing.
- Symbol "Detail A1" these lifting points shall be used for lifting parts of MLA only.
- Symbol "Detail A2" defines the "Centre of gravity" which has been used in this instruction.
- For general torque moments see IOM instruction 000-000-002-00 "General requirements to tighten bolt and nuts".
- A fully assembled MLA shall be lifted on the different colored lifting lugs, see also sheet 5 and 6.
- Where soft material is mentioned, wood or rubber mats or similar material shall be used to prevent damage.
- Surface of assembly area shall be:
  a) Reasonable flat.
  b) Strong enough to withstand the local pressure caused by MLA gravity force at A-frames baseplate.
- The sequence parts are situated in container can deviate from the sequence these parts are lifted for installation.

Detail A1

Centre of gravity
Detail A2

Applicable tools:
- Crane (2x).
- For mounting smaller loose parts, a small crane could be used.
- A wide-range of slings.
- Chain shackles, with green pin (Ø57).
- Adaptable spreader 1: distance DD sheet 4 adaptable at least ± 250 mm.
- Adaptable spreader 2: distance EE sheet 4 adaptable at least ± 250 mm.
- 2x Chain block 3 ton.
- Cherry picker or scaffolding.
- Caulking gun with clear silicone-BB.

Transport requirement:
- Due to transport requirements on the road in the Netherlands, the triple is dismantled and the riser lower part will be separate.
- Futher assembling shall be done on client assembly area.

This document is confidential and the information contained herein is a confidential disclosure. It is shown on the understanding it is not to be revealed to others or used for any other purpose without the written consent of KANON LOADING EQUIPMENT B.V.

Revision 3			
Revision 2	18-3-2025	NZZ	Changed lifting instruction
Revision 1	22-1-2025	NZZ	Changed lifting points and added skid

Check			Length -and angle tolerances acc. to KGR 100-02-EX-EN, class C	Form -and place tolerances acc. to ISO 2768-2, class K	Roughness according to ISO 4287, Ra in µm	Units in mm
Drawn	14-11-2024	NZZ				
Scale: 1 : 4		A3				

Installation & lifting plan

With transport requirements

KANON LOADING EQUIPMENT
P.O. Box 385, 3840 AJ Harderwijk

American Projection

Drawing number P242068A01

Revision 2

\\MY-FILE03\Engineering\Projects\P242068\Engineering\Inventor\Drawings\A10\P242068A01.idw

1. Assembling riser structure to the foundation:
- Remove the riser product part before lifting riser structure. to avoid damage.
- Strap slings around riser lower part.
- Lift up riser lower part.
- Align riser lower part with foundation.
- Mount the the riser lower part to foundation.

2. Assembling riser product part:
- Loosen the clamp on the riser product part.
- Strap slings around riser product lower part.
- Lift up riser product lower part.
- Place the product lower pipe according to the dimension.
- Apply silicone-BB on perimeter of the flange connection.
- Install clamp (3x) to the riser product lower part.

Weight riser lower part product: 2000 kg

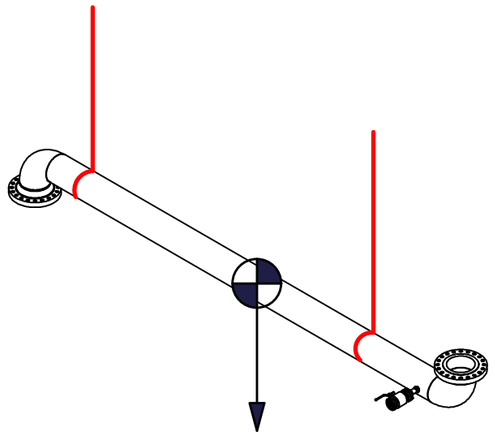

Weight riser lower part structure: 7020 kg

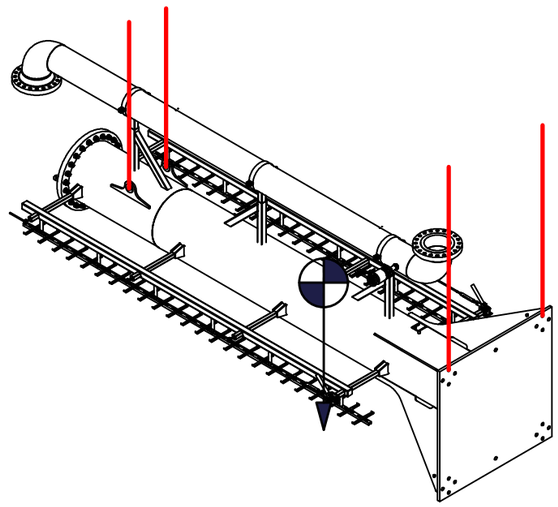

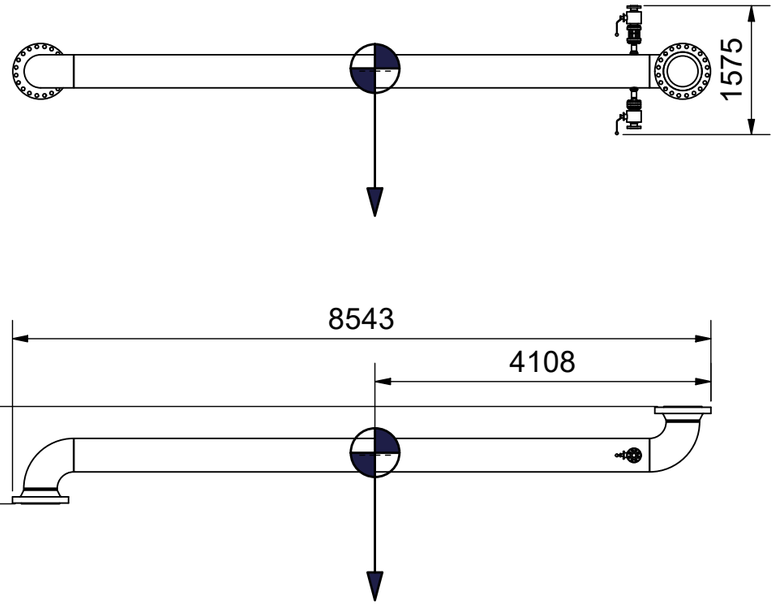

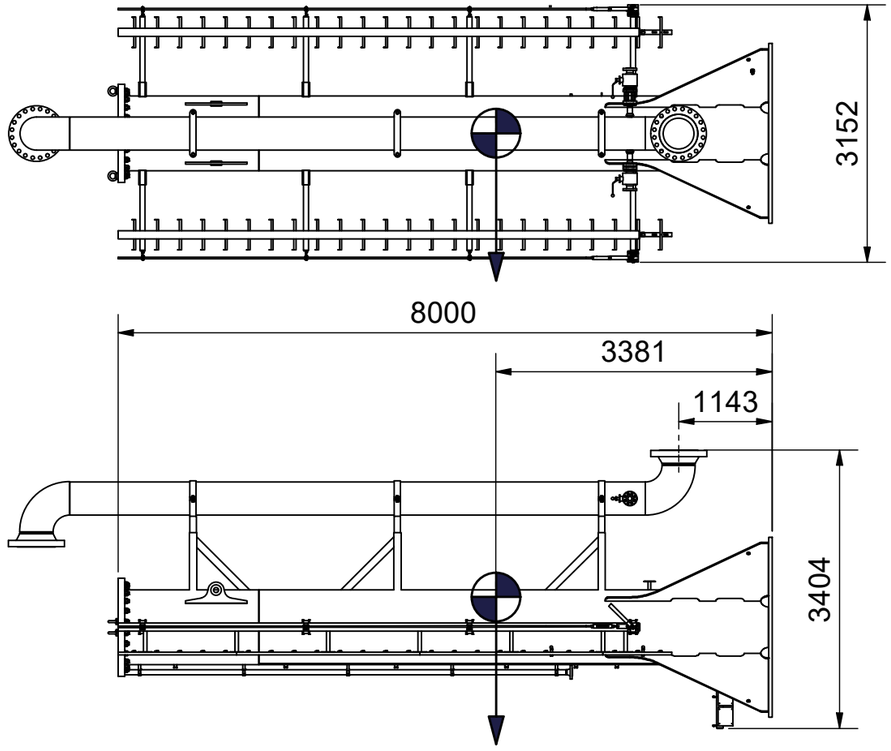

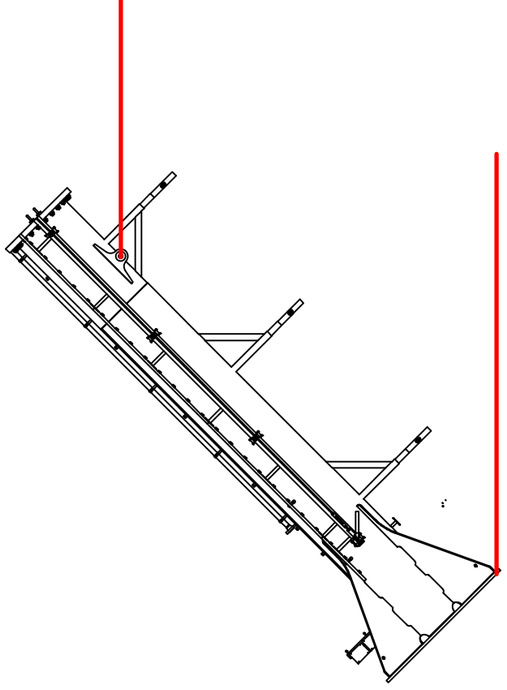

This document is confidential and the information contained herein is a confidential disclosure. It is shown on the understanding it is not to be revealed to others or used for any other purpose without the written consent of KANON LOADING EQUIPMENT B.V.

Revision 3			
Revision 2	18-3-2025	NZZ	Changed lifting instruction
Revision 1	22-1-2025	NZZ	Changed lifting points and added skid
Check			Length -and angle tolerances acc. to KGR 100-02-EX-EN, class C / Form -and place tolerances acc. to ISO 2768-2, class K / Roughness according to ISO 4287, Ra in µm / Units in mm
Drawn	14-11-2024	NZZ	
Scale: 1 : 75		A3	

Installation & lifting plan

With transport requirements

KANON LOADING EQUIPMENT
P.O. Box 385, 3840 AJ Harderwijk

American Projection

Drawing number P242068A01

Revision 2

\\MY-FILE03\Engineering\Projects\P242068\Engineering\Inventor\Drawings\A10\P242068A01.idw

3. Assembling and lifting parallel structure to outboard:
- Lift up MLA at the same time loosen outboard and triple slings in a controlled manner simultaneously.
- Bring the end of the outboard towards the ground and let them rest on wood.
- When the strap connected between outboard and inboard are finally free of force it can be removed and replaced by two chain blocks.
- Lift the MLA in such position so outboard is in horizontal position (base plate up, apex down). The connection point at the apex and the parallel is now accessible.
- Lift the parallel (use a chain block attached to the apex crane) and fill the space underneath with pieces of wood till the height of the connection hole in the apex and parallel are equal. When necessary lift the base plate and lower the apex.
- Use the chain block to lower the parallel to align the hole in the apex and parallel,see detail A.
- Place the V-seals.
- Grease both pins.
- Place the pins.
- Lock pins with the lock plates.

4. Assembling and lifting triple to outboard:
- Lift up triple as shown.
- Use a forklift to manoeuvre triple underneath MLA.
- Apply silicone-BB around perimeter of the flange connection.
- Attach triple to outboard (for swivel part list see 80349001).
- Attach as much hydraulic lines as possible.

5. Assembling loading arm upper part to riser lower part
- Strap slings loading arm upper part.
- Lift up loading arm upper part.
- Align loading arm upper part to riser lower part.
- Apply silicone-BB on perimeter of the flange connection.
- Apply silicone-BB on the flange face.
- Mount loading arm upper part to riser lower part (see detail B, C and D).

6. Assembling riser product pipe
- Align riser product lower part with the riser product part flange.
- Apply silicone-BB on perimeter of the flange connection.
- Mount riser product lower part to the riser product upper part (see detail C).

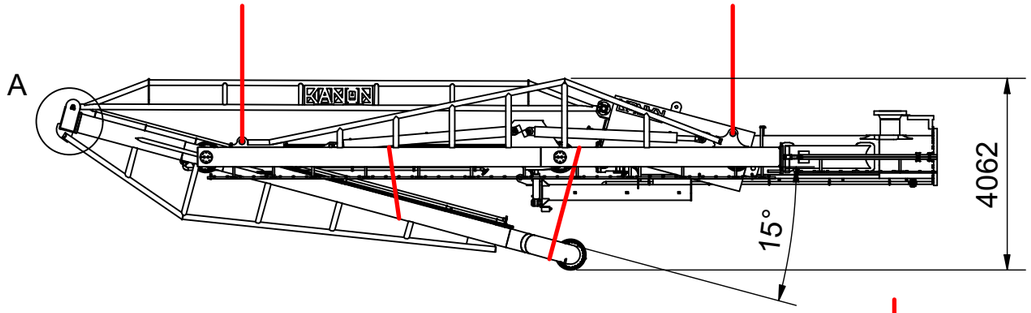

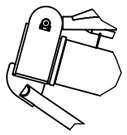

Detail A
1. Pin parallel structure (2x)
2. Lock plate (2x)
3. Hex screw M12 x 25 (4x)
4. Spring washer ID 12.2 (4x)

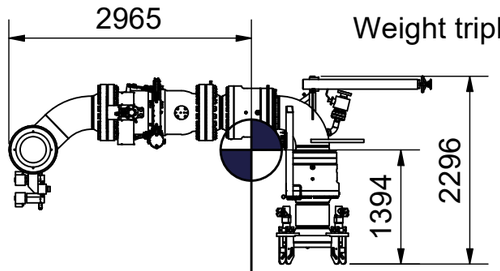

Weight triple: 4642 kg

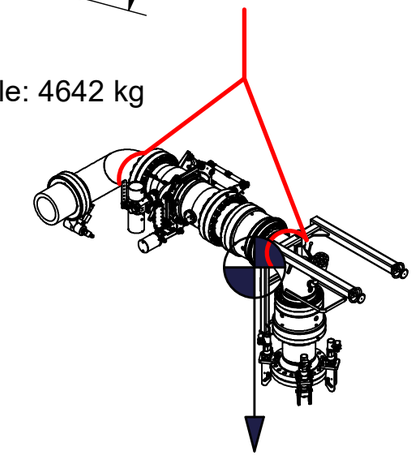

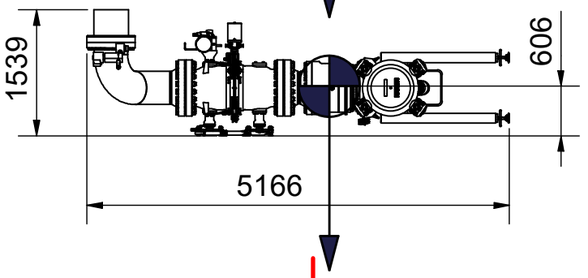

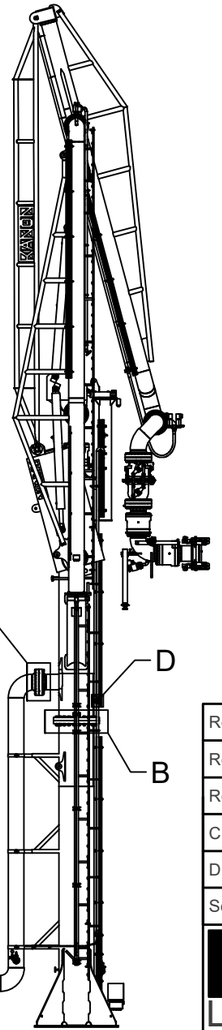

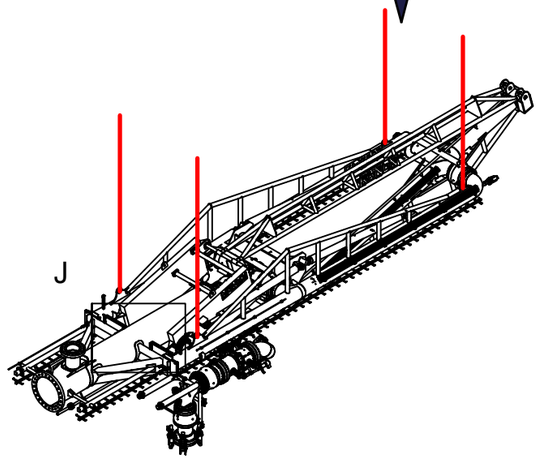

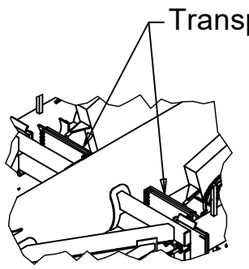

Detail J

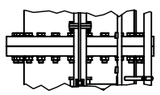

Detail B
1. Hex bolt M36 x 220 (24x)
2. Hex nut M36 (24x)
3. Washer ID 37 (48x)
4. Hex bolt M16 x 70 (4x)
5. Hex nut M16 (4x)
6. Washer ID17 (8x)

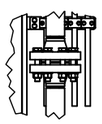

Detail D
1. Hex bolt M16 x 100 (8x)
2. Hex nut M16 (8x)
3. Washer ID17 (16)

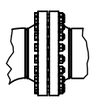

Detail C
1. Hex bolt M36 x 220 (20x)
2. Hex nut M36 (20x)
3. Washer ID 37 (40x)

Revision 3			
Revision 2	18-3-2025	NZZ	Changed lifting instruction
Revision 1	22-1-2025	NZZ	Changed lifting points and added skid
Check			Length -and angle tolerances acc. to KGR 100-02-EX-EN, class C / Form -and place tolerances acc. to ISO 2768-2, class K / Roughness according to ISO 4287, Ra in µm / Units in mm
Drawn	14-11-2024	NZZ	
Scale: 1 : 130		A3	

KANON LOADING EQUIPMENT
P.O. Box 385, 3840 AJ Harderwijk

Installation & lifting plan

With transport requirements

American Projection

Drawing number P242068A01

Revision 2

This document is confidential and the information contained herein is a confidential disclosure. It is shown on the understanding it is not to be revealed to others or used for any other purpose without the written consent of KANON LOADING EQUIPMENT B.V.

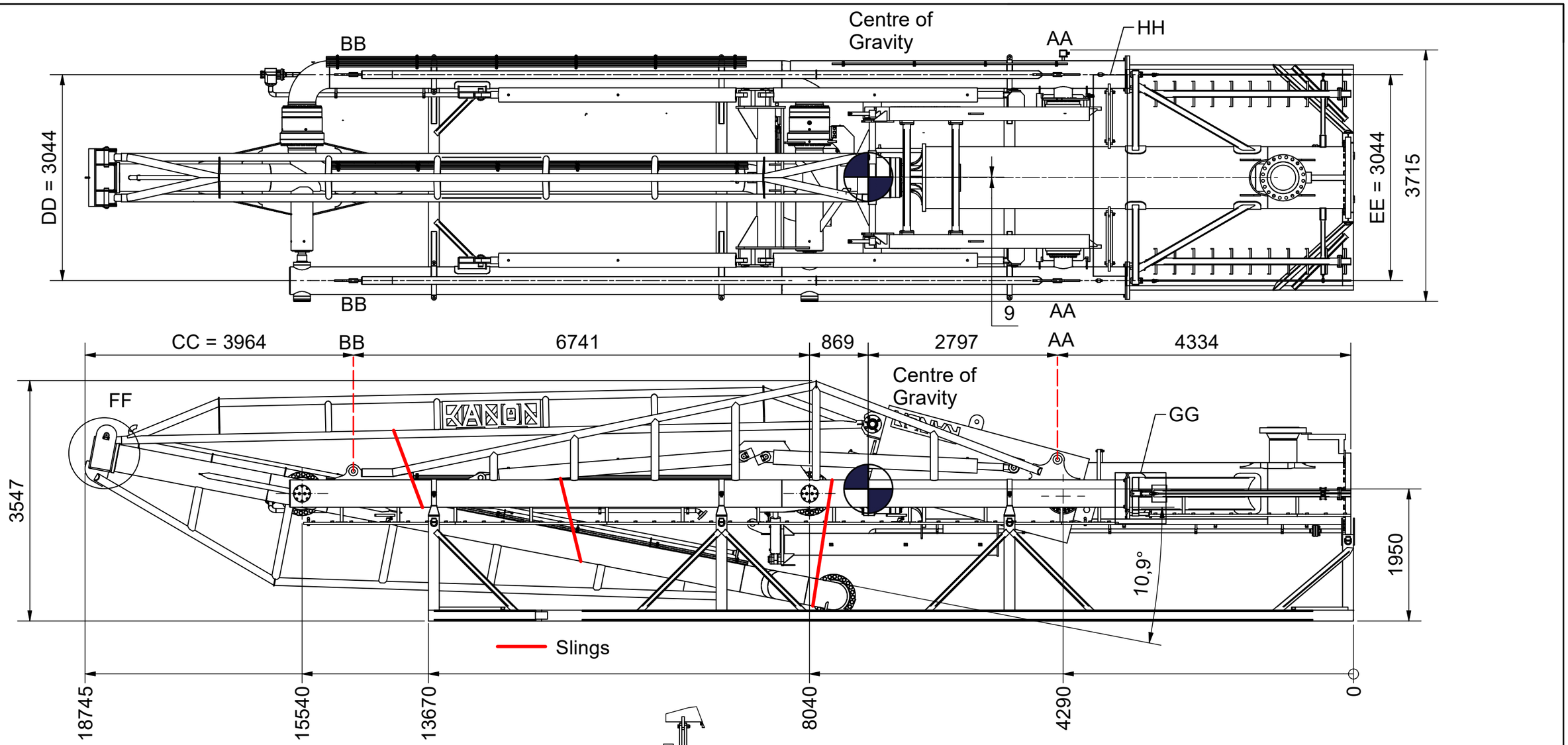

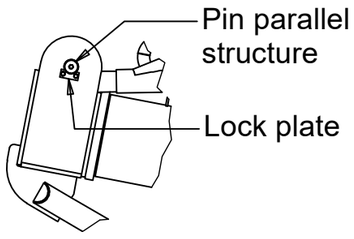

Detail FF

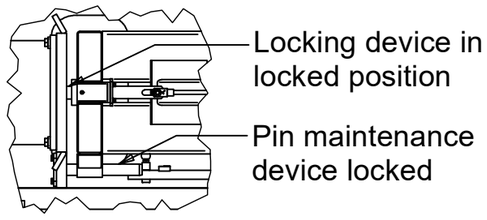

Detail GG

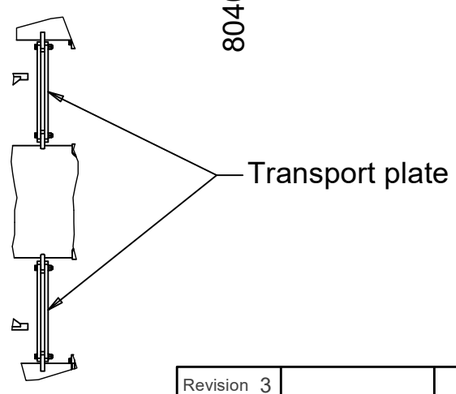

Detail HH

Ident no.	Design
P242068A10	Right hand
P242068B10	Right hand
P242068E10	Right hand
P242068F10	Right hand

Transport information

Weight loading arm	:	47.5 tons
Weight transports skid	:	1.8 tons
Dismounting triple	:	Yes
Dismounting apex pins	:	Yes
Min. inboard/outboard angle	:	10.9°
Diameter hole lifting lugs	:	60 mm

Sheet 4 of 6

WARNING

Check before lifting:
All transport plate are installed.
Locking device lever is in upwards position.
Locking pins are in locked position.
Pin should be in reversed position.
Take action when needed.

Lifting points
AA and BB

Revision 3			
Revision 2	18-3-2025	NZZ	Changed lifting instruction
Revision 1	22-1-2025	NZZ	Changed lifting points and added skid
Check			Length -and angle tolerances acc. to KGR 100-02-EX-EN, class C / Form -and place tolerances acc. to ISO 2768-2, class K / Roughness according to ISO 4287, Ra in µm / Units in mm
Drawn	14-11-2024	NZZ	
Scale: 1 : 60		A3	

KANON LOADING EQUIPMENT
P.O. Box 385, 3840 AJ Harderwijk

Installation & lifting plan

With transport requirements

American Projection

Drawing number P242068A01

Revision 2

This document is confidential and the information contained herein is a confidential disclosure. It is shown on the understanding it is not to be revealed to others or used for any other purpose without the written consent of KANON LOADING EQUIPMENT B.V.

\\MY-FILE03\Engineering\Projects\P242068\Engineering\Inventor\Drawings\A10\P242068A01.idw

Dimension after pin parallel installed and riser installed

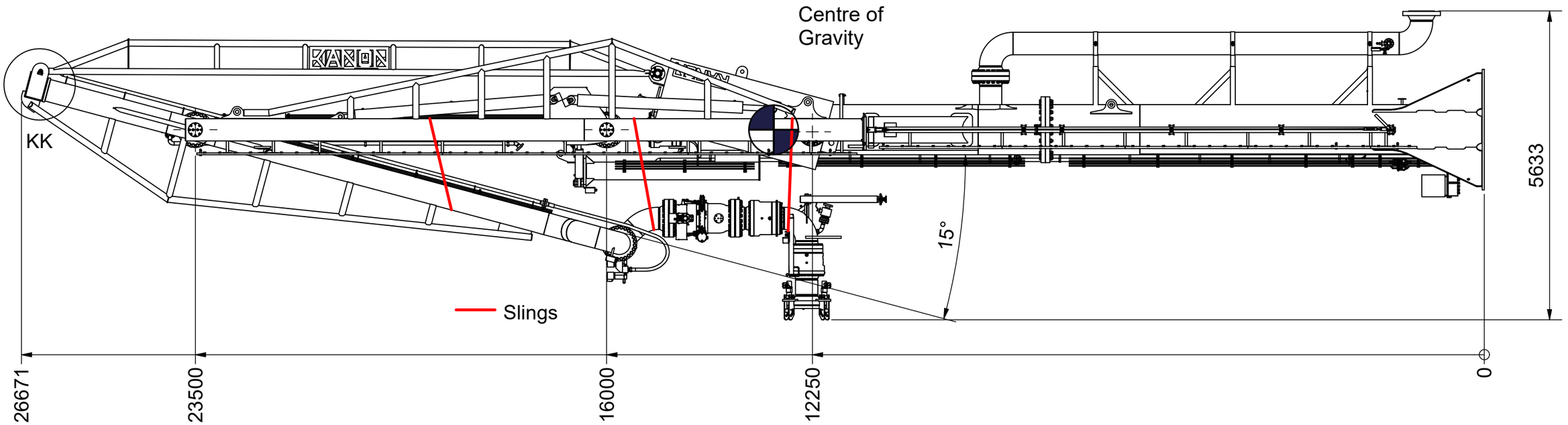

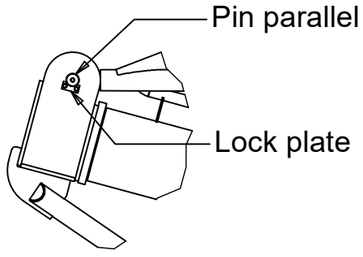

Detail KK

Transport information

Weight loading arm	:	47.5 tons
Weight transports skid	:	1.8 tons
Dismounting triple	:	Yes
Dismounting apex pins	:	Yes
Min. inboard/outboard angle	:	10.9°
Diameter hole lifting lugs	:	60 mm

Sheet 5 of 6

Revision 3			
Revision 2	18-3-2025	NZZ	Changed lifting instruction
Revision 1	22-1-2025	NZZ	Changed lifting points and added skid
Check			Length -and angle tolerances acc. to KGR 100-02-EX-EN, class C / Form -and place tolerances acc. to ISO 2768-2, class K / Roughness according to ISO 4287, Ra in µm / Units in mm
Drawn	14-11-2024	NZZ	
Scale: 1 : 75		A3	

KANON LOADING EQUIPMENT
P.O. Box 385, 3840 AJ Harderwijk

Installation & lifting plan

With transport requirements

American Projection

Drawing number P242068A01

Revision 2

\\MY-FILE03\Engineering\Projects\P242068\Engineering\Inventor\Drawings\A10\P242068A01.idw

This document is confidential and the information contained herein is a confidential disclosure. It is shown on the understanding it is not to be revealed to others or used for any other purpose without the written consent of KANON LOADING EQUIPMENT B.V.

CAUTION: The lifting lugs may not be subjected to heavy horizontal (bending) loads.

1) Only lift the equipment horizontally by using the (red painted) lifting lugs.
2) Do not use forklifts to lift arm from packing skid/frame.
3) Use two individual lifting cranes to lift the equipment. Each crane must be suitable to handle the full weight of the loading arm.
4) Use suitable shackles to connect to the lifting lugs, do not use slings directly to connect to the lifting lugs.
5) Kanon advise to use adaptable spreaders.
6) Adaptable spreader 1: "**distance DD"** adaptable at least +/- 250 mm.
7) Adaptable spreader 2: "**distance EE"** adaptable at least + /- 250 mm.
8) The instruction and drawing shall be thoroughly studied before installation or lifting.
9) Do not step or climb on the equipment. Remain outside of the skid boundaries to prevent damage to small parts of the equipment.
10) Use adequate personal protective equipment (PPE) and follow safety regulations of the local premises where lifting takes place.
11) If in doubt, contact Kanon at: +31 36 521 97 77
12) A leak test shall be done, as done at the assembling stage of the MLA, see leak test P242068A10-1S, B10-1S, E10-1S & F10-1S.

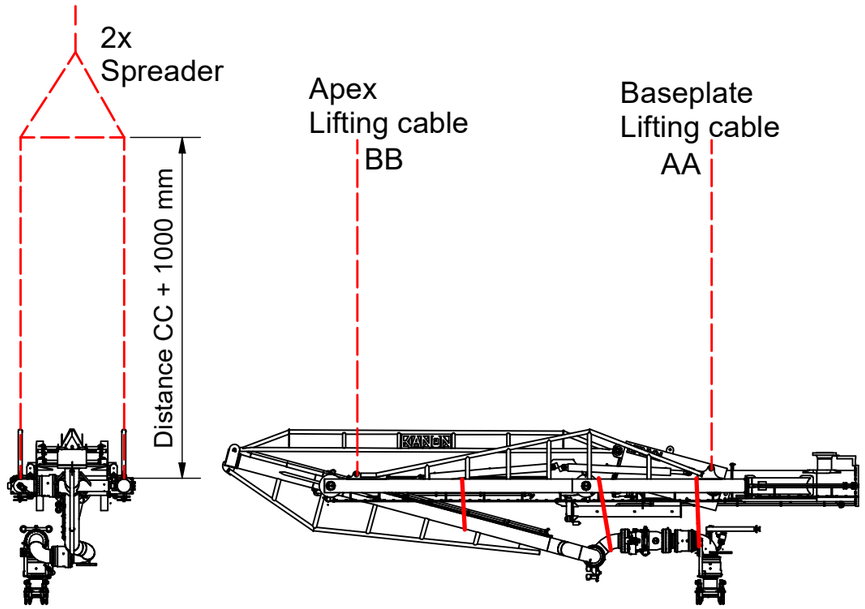

I. Horizontal

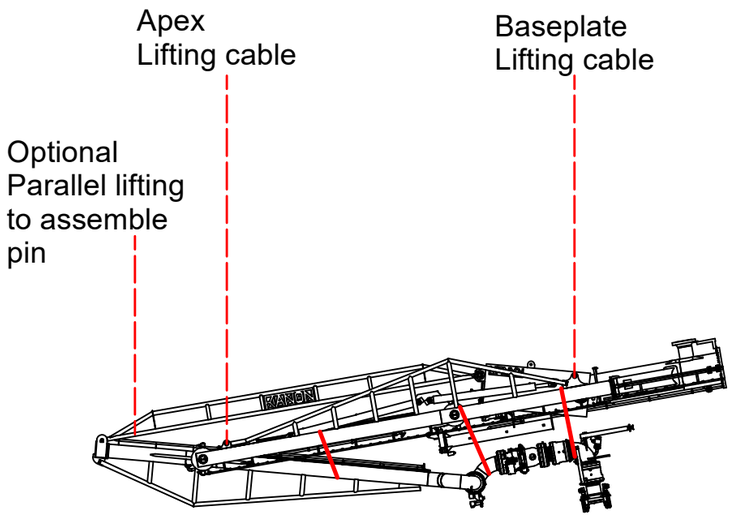

II. Assembling pin parallel structure

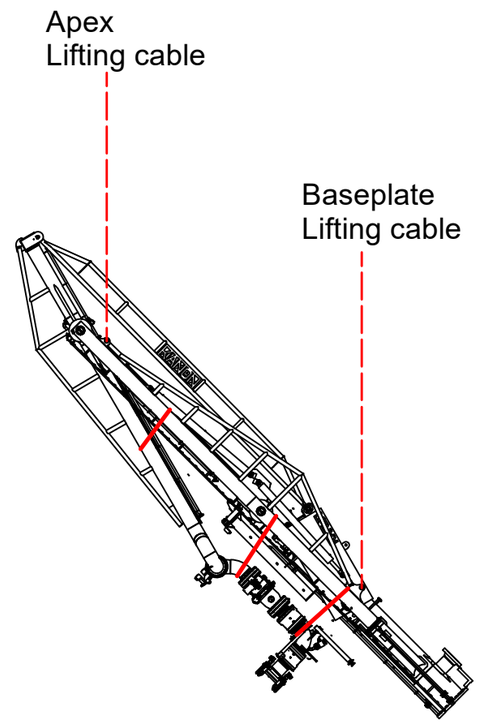

III. 45°

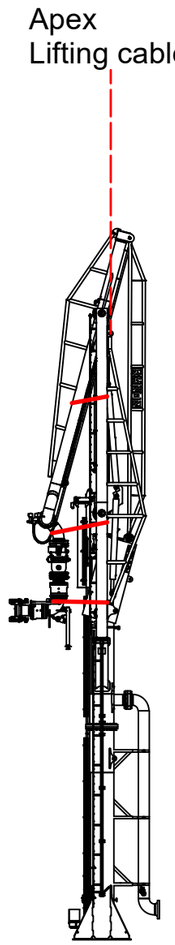

IV. Vertical

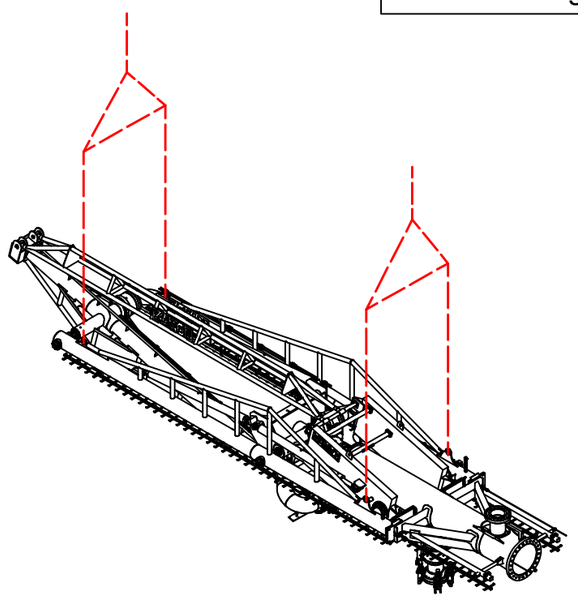

Transport information

Weight loading arm	:	47.5 tons
Weight transports skid	:	1.8 tons
Dismounting triple	:	Yes
Dismounting apex pins	:	Yes
Min. inboard/outboard angle	:	10.9°
Diameter hole lifting lugs	:	60 mm

Sheet 6 of 6

Revision 3			
Revision 2	18-3-2025	NZZ	Changed lifting instruction
Revision 1	22-1-2025	NZZ	Changed lifting points and added skid
Check			Length -and angle tolerances acc. to KGR 100-02-EX-EN, class C / Form -and place tolerances acc. to ISO 2768-2, class K / Roughness according to ISO 4287, Ra in µm / Units in mm
Drawn	14-11-2024	NZZ	
Scale: 1 : 230		A3	

KANON LOADING EQUIPMENT
P.O. Box 385, 3840 AJ Harderwijk

Installation & lifting plan

With transport requirements

American Projection

Drawing number P242068A01

Revision 2

This document is confidential and the information contained herein is a confidential disclosure. It is shown on the understanding it is not to be revealed to others or used for any other purpose without the written consent of KANON LOADING EQUIPMENT B.V.

\\MY-FILE03\Engineering\Projects\P242068\Engineering\Inventor\Drawings\A10\P242068A01.idw

Weight Triple:	4642 kg
No. of cranes required:	1
Chain Tackle (optional):	1

Preparation

- The MLA has to be erected first.
- Secure outboard arm to inboard arms to prevent swinging of the outboard arm (see figure 3).
- Unpack Triple Assembly and position it as shown in figure 1 (a crane is required due to the weight of the Triple Assembly).
- The Support Jack can be mounted at this stage, however preferred is to mount the Support Jack when the Triple Assembly is fully mounted.
- Place 2 slings around the Triple Assembly: one just below the coupler flange (bottom sling) and one just above the ERC (top sling). Attach a chain hoist to the top sling (optional for easy handling). Attach bottom sling and chain hoist to the crane hook.
- Lift the Triple Assembly a little. Check if the outerbody face is still aligned vertically. Proceed if outerbody face is vertically aligned.

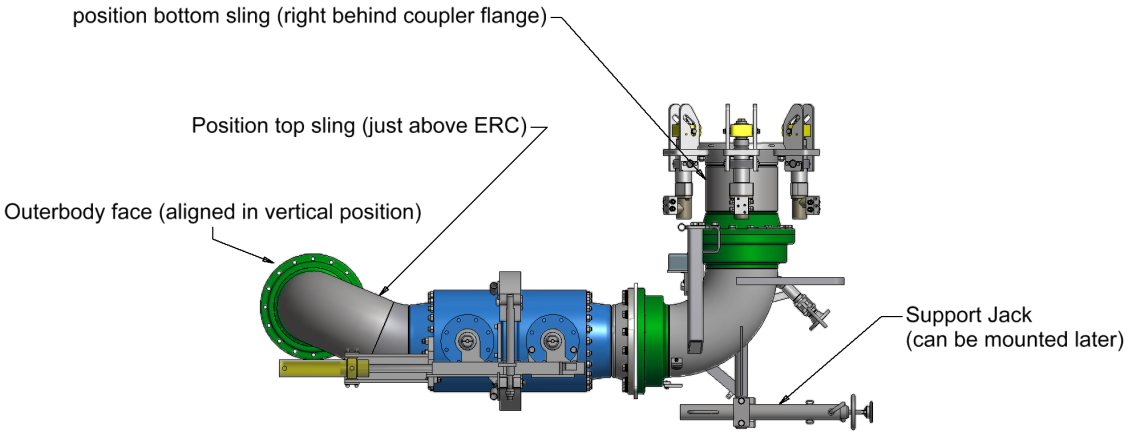

Figure 1

Lifting

- Lift the Triple Assembly to a horizontal position. Position the outerbody face next to the swivel flange at the end of the outboard arm (see figure 2).
- To align the bolt holes the outerbody can be rotated. Make sure the function control hole in the outerbody (see Data sheet swivel joint for more info) is facing down.

Mounting

- Clean the seal face of the swivel flange and the outerbody.
- Place the product seal in the groove of the outerbody.
- Now the Triple Assembly can be mounted to the swivel flange. Tightening torques are specified in document '000-000-002-00 General requirements for tightening bolts and nuts'.

Lowering The Triple

- When the Triple Assembly is mounted, the chain hoist can be used to release the tension in the top sling. The top sling can now be removed.
- The Triple Assembly can be lowered carefully by the crane (see figure 3). When it is vertical the bottom sling can be removed.
- To install the Support Jack the MLA can be placed in the maintenance position (with the Triple Assembly at ground level) or use a Men basket.

Swivel flange at end of outboard arm →

Figure 2

Preparation:
Secure outboard arms to inboard →

Figure 3

1.0 Introduction

This instruction describes the procedure for fine adjustment of the MLA balance, especially before a Factory Acceptance Test or in the field when modifications have been made.

NOTE; modifications of an MLA shall only be made in consultation and cooperation with Kanon Loading Equipment BV.

Fine adjustments can be made by adding or removing removable weights at the counterweight(s) and tail of inboard arm(s).

This instruction is intended for:

- Kanon service engineers.
- Site maintenance engineers.

2.0 Preparation

2.1 Applicable tools

- General toolbox.
- Cherry picker (at standby).

2.2 Safety and further important instruction

Thoroughly read Kanon instruction “002-001-000-00, General safety requirements MLA”.

Read one of the following document thoroughly:

- 002-003-004-00 Hydraulic locking device MLA with ERC.

WARNING; ERC arming valve shall remain in the disarmed position during adjustment balancing.

3.0 Procedure

NOTE; always start outboard balancing before inboard balancing.

3.1 Outboard balancing hydraulic/electric MLA

1. Start the procedure with the MLA in stored position, mechanical locking devices locked (Hand levers of locking devices in the up position, Figure 1, detail A).
2. Start the electrical system.
3. Open the hydraulic locks on riser with the hand levers, see Figure 1, view B of detail A.

4. Activate the “ship” button on control panel/pendant/radio and maneuver the outboard arm in maximum out/up position, see Figure 1.
5. Activate the “shore” button, and maneuver the outboard arm from this maximum position approximately half a meter back in/down.
6. Set the MLA to “freewheel mode” on the control panel/pendant/radio.
7. Determine, if the triple is moving up/down.
   In that case the MLA needs to be balanced by adding weights if it moves up and taking weights off if it moves down.

WARNING; before starting to add or remove weight, lock MLA hydraulically with the hand levers.

8. Add or remove weight from the square bar. The square bar is situated at the end of the counterweight (Figure 1, detail C). If two counterweights are used, divide the weights over the left and right counterweight.

3.2 Outboard balancing hydraulic MLA (with operating handles on the power pack)

1. Start the procedure with MLA in stored position, with mechanical locking devices locked (Hand levers of locking devices in up position, Figure 1, detail A).
2. Start the powerpack.
3. Open the hydraulic locks on the riser with the hand levers.
4. Maneuver the outboard arm in maximum out/up position, see Figure 1.
5. Maneuver the outboard arm from this maximum position approximately half a meter back in/down.
6. Determine, if the triple is moving up/down..
   In that case the MLA needs to be balanced by adding weights if it moves up and taking weights off if it moves down.

3.3 Outboard balancing manual operated MLA

1. Start the procedure with MLA in stored position, with mechanical locking devices locked (Hand levers of locking devices in upwards position, Figure 1, detail A).
2. Maneuver with a cherry picker the outboard arm in maximum outwards/upwards position, see Figure 1.
3. Maneuver with a cherry picker the outboard arm from this maximum position approximately half a meter back inwards/downwards.
4. Determine, if the triple is moving up/down.
   In that case the MLA needs to be balanced by adding weights if it moves up and taking weights off if it moves down.

WARNING; before starting to add or remove weight, lock the MLA with hand levers of hydraulic lock on riser.

5. Square bar is situated at the end of counterweight (Figure 1, detail C). If two counterweights are used, divide the weights over left and right counterweight.

NOTE; if more weights are needed than available, please contact the Kanon Loading Equipment Service Department at (+)31 36 52 19 777.

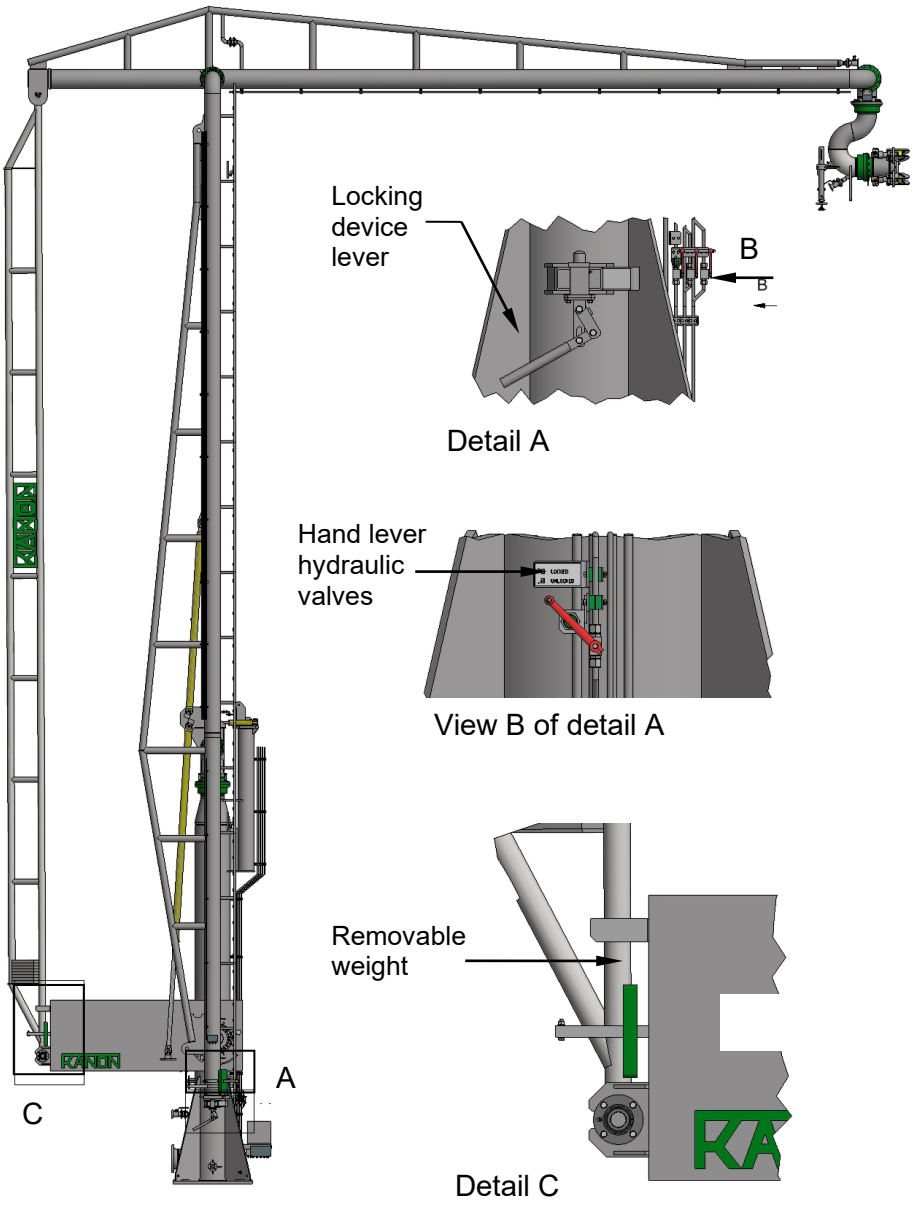

Figure 1

3.4 Inboard balancing

1. Unlock inboard arm with the mechanical locking device(s). Hand lever(s) in the down position.
2. When a Control panel/panel/radio is used : set it to "manoeuvering" .
3. Maneuver the MLA with inboard arm into a horizontal position and the outboard arm in a vertical position. See Figure 2.
4. Than switch to “freewheel” mode on the control panel/pendant/radio.
5. Determine if the triple is moving up/down. In that case the MLA needs to be balanced by removing weight if the triple moves up , adding weight if it moves down.

WARNING; before starting to add or remove weight, lock the MLA with the hand levers of the hydraulic lock on riser.

6. Add weight to the square bar of inboard or remove weight from the square bar of inboard which is situated at the end of inboard tail. See Figure 2, detail D.

NOTE; divide the amount of weights over front side square bar and back side square bar.

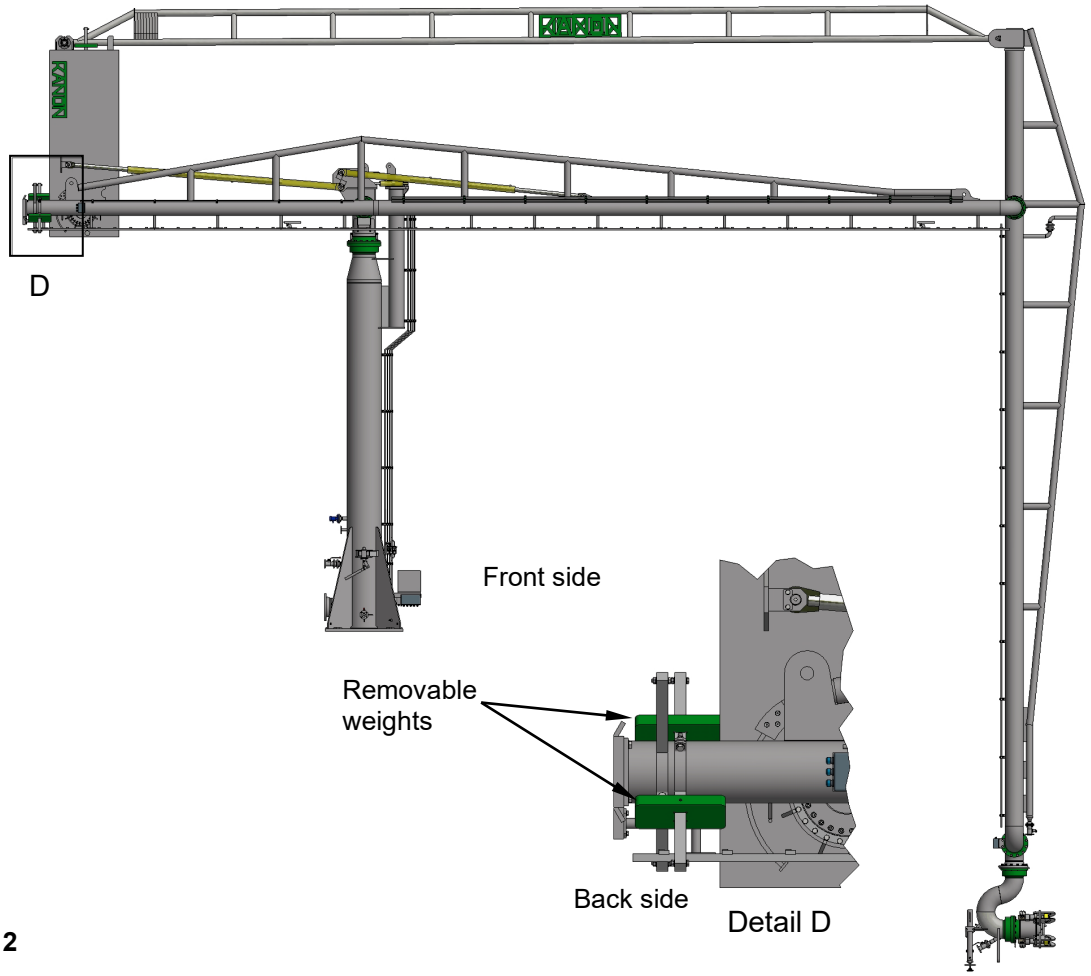

Figure 2

1.0 Introduction.

Kanon products are transported according the Kanon standard transport conditions. For storage of Kanon products there are extra requirements If storage is not clearly mentioned to Kanon Loading Equipment B.V. the warranty can be voided.

Short time storage: up to three months.
Long-time storage: more than three months.

Some factors that should be taken into account for storage:

- Time period.
- Weather (temperature, humidity, etc.) conditions at the location.
- In-outside storage.

NOTE; If needed contact the Kanon Loading Equipment Service Department: +31 36 521 97 77.

2.0 Storage requirements and recommendations

- All open ends shall be blinded off with stainless steel plates.
- All flanged openings to be blanked off with blind flanges and gaskets. Flange edges shall be sealed with waterproof tape such as “Densotape” or equivalent. Wooden or plastic flanges or plates are not recommended.
- If a standard blind flange cannot not be fitted, use plastic plugs and sealant to prevent ingress of moisture and dirt.
- All piping to be dried by dried air or a heat blower and at least protected with silica gel bags.
- For a storage period of three months or more fill the loading arms with nitrogen (N_2). Please refer to details below regarding this preventive measure:
    - When condition of interior parts need to be maintained, all nozzles must be blinded off with blanking plates and the flange faces must be greased to prevent rust. Close the ball valves at the drain connections. The nozzles without a valve need to be closed with a blind flange. Fit one of the flanges with a N2 connection, ball valve and manometer. Fill the loading arm with N2 and apply a low pressure of ~0,2 bar. Monitor the N2 pressure bi-weekly and correct if necessary.
- All electrical junction boxes shall be provided with silica gel bags to protect them from moisture.
- All unpainted (stainless) steel parts like cables, threaded rods, etc. shall be protected with a preservative layer of grease and covered with a plastic or wooden cover.
- Exposed hydraulic cylinder rods to be provided with TECTYL 506-WD, thickness 100 µm. Product data sheets are shown on the last two pages of this document.
- All function control holes of swivel joints to be sealed with a plug.
- The parts, stored inside or outside, shall be covered with a tarpaulin to protect these parts
- All pneumatic valves and cylinders shall be protected, by means of grease or covers, from moisture to prevent corrosion and icing. Pneumatic instrument boxes shall be provided with silica gel bags.
- Parts must be stored safely.
- Loading arms in transport skids or on storage supports must be placed on a flat and hard surface (see figure 1).
- Before or after erection/installation: a leak test is done giving evidence of tightness.
- Silica gel must be replaced when saturated.

- Two monthly inspections to check the preservation status shall be carried out.
- The electrical cabinets and hydraulic power packs shall be packed in wooden cases, with silica gel bags and stored (see figure 2).
- The SCADA system boxes, PC and monitor (if applicable) shall be stored in a climate controlled area.

Figure 1

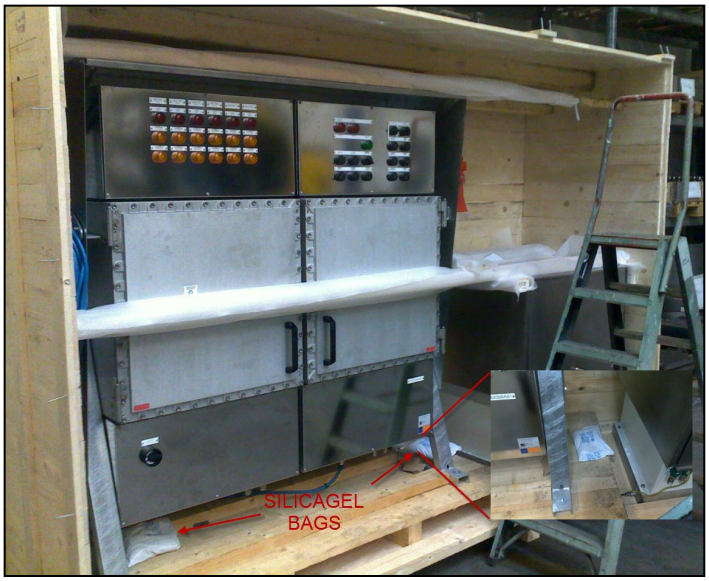

Figure 2

3.0 Product data sheet.

Below TECTYL 506-WD product data sheet is shown.
Safety data sheet can be given on request.

Tectyl™ Product information

Valvoline Performance Products – Tectyl

Version: **TE034/01**

Tectyl™ 506-WD

Premium solvent based corrosion preventive compound.

TECTYL 506-WD is solvent cutback, wax base, thixotropic, dark amber, water displacing corrosion preventive compound.
TECTYL 506-WD is recommended for the long term protection of ferrous and non-ferrous metals, as an underbody coating of autos, trucks, trailers, etc.
TECTYL 506-WD cures to a relatively firm, dark amber, resilient, tough film.
TECTYL 506-WD is the Water Displacing version of Tectyl 506.

Approvals/Performance levels

Tectyl 506-WD
Accelerated Corrosion tests: @ Average recommended DFT
Salt Spray; 5 % NaCl @ 35°C; ISO 9227 NSS (Q-Panels, Type R, ASTM A1008) **25+ days**
Humidity; 100 % RH; @ 40°C; ISO 6270-2 CH (Q-Panels, Type R, ASTM A1008) **100+ days**
Estimated Protection Period
Indoor: 24 months Outdoor: 12 months

Applications

Surface preparation:
The maximum performance of **TECTYL 506-WD** can be achieved only when the metal surfaces to be protected are clean, dry and free of rust, oil and mill scale and a substrate temperature of 10-35 °C at the time of product application.

Application:
TECTYL 506-WD is formulated to be used as supplied. Due to its composition **TECTYL 506-WD** can be subject to postproduction viscosity changes and/or wax sedimentation. Always ensure homogeneous consistency by agitation before use. If the product thickens due to cold storage or loss of solvent during use, thinning with Valvoline 150 is possible to get the desired consistency. Incorrect thinning will affect film build, dry time and potentially product performance. Tectyl 506-WD can be applied by low pressure air spray, brush or dipping.

Removal:
TECTYL 506-WD can be removed with mineral spirits or any similar petroleum solvent, hot alkaline wash or low pressure steam. If dried and cured the film of **TECTYL 506-WD** can also be removed with Tectyl Biocleaner.

Features & Benefits

Superior Protection
At the recommended DFT Tectyl 506-WD will protect against corrosion during storage, domestic and overseas transport.
Inside and outside protection
Tectyl 506-WD can protect parts stored outside as well, due to its excellent UV protection.

Processing
Tectyl 506-WD is easy to apply and easy to remove, when no longer needed.
Economical
With a DFT of only 50 microns, Tectyl 506-WD can protect a big surface with just little amount of the product.

Tectyl™

Product information

Trusted since 1930
Since 1930, Tectyl™ protective coatings have been extending the operational life of cars, trucks, buses and other vehicles and equipment. The Tectyl name is synonymous with quality coatings that are easy to apply, long-lasting and easy to remove when no longer required.

For more information on Tectyl products, programs and services please visit
www.tectyl-europe.com

Typical properties
Typical property characteristics are based on current production. Whilst future production will conform to Tectyl specifications, variations in these characteristics may occur.

Tectyl 506-WD	
Flashpoint; PMCC [°C]	40
Density @ 20°C [kg/ltr]	0,87
Recommended Dry Film Thickness over metal profile [microns]	> 50
Theoretical coverage @ recommended DFT [m²/ltr]	9,6
Non Volatile [weight %]	54
Dry to touch time @ 20°C [hours]	1
Cure time @ 20°C [hours]	24
Volatile Organic Compound Content ISO 11890-2 (10.4) [g/ltr]	403

This information only applies to products manufactured in the following location(s): Europe

Health & Safety
This product is not likely to present any significant health or safety hazards when properly used in the recommended application and good standards of personal hygiene are maintained. Reference is made to the Safety Data Sheet (SDS) which is available on request via your local sales office or via the internet
http://sds.valvoline.com

Protect the environment
Comply with local regulations. Comply with local regulations. Do not discharge into drains, soil or water.

Storage
Tectyl 506-WD should be stored at temperatures between 10-35 °C. Mild agitation is recommended prior to use. Due to its composition Tectyl 506-WD can be subject to postproduction viscosity changes during storage. Under proper storage conditions Tectyl 506-WD is best before 36 months after production date.

Caution
Adequate ventilation is required for cure and to ensure against formation of combustible liquid. THE PARTIALLY CURED FILM SHOULD NOT BE EXPOSED TO IGNITION SOURCES SUCH AS FLARES, FLAMES, SPARKS, EXCESSIVE HEAT OR TORCHES. Refer to The Safety Data Sheet for additional handling and first aid information.

Note
The addition of any product over or under this coating is not recommended. The use of additional coatings could result in chemical incompatibility, thus affecting the performance of this coating as stated in the Typical Properties section. If a primer, other than a Valvoline recommended product is required, written authorization must be obtained from Valvoline.

Replaces –

™ Trademark of Valvoline, registered in various countries © 2017

All statements, information and data presented herein are believed to be accurate and reliable, but are not to be taken as a guarantee, an express warranty, or an implied warranty of merchantability or fitness for a particular purpose, or representation, express or implied, for which Ellis Enterprises B.V. and its affiliates assume legal responsibility.

Copy of KGR no. 100-04-EX-EN

1.0 Introduction

This instruction.

- Applies to bolt connections in Kanon constructions.
- Is not applicable when a specific torque is specified in:
  - Kanon assembly drawings.
  - Kanon instructions.
- Contains details from ASME PCC-1 for flange connections.

NOTE; questions on tightening bolts contact Kanon Loading Equipment at: +31 36 52 19 777.

2.0 Procedure

Washers shall:

- Be made out of the same material as the bolt and nut set.
- Have a minimum hardness of 140 HV.

Tightening bolts shall be done according to:

- The prescribed sequence, see figure 1.
- The value in the appropriate table 1-9.

Bolts may be tightened using a pneumatic tool to reduce assembly time, however the final tightening shall be done with a proper tool.

NOTE; for torque values over 600 Nm Kanon advises to use a torque multiplier or, even better, an electric hydraulic torque wrench.

WARNING; when equipment weighs over 20 kg a crane and/or scaffolding shall be used.

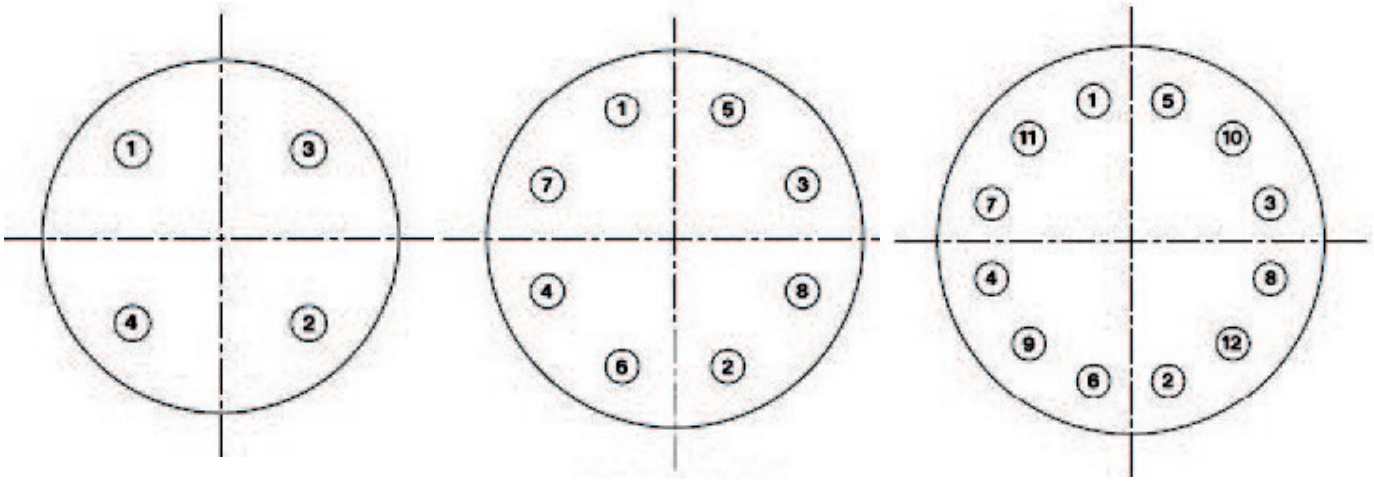

Flange with 4 bolts

Flange with 8 bolts

Flange with 12 bolts

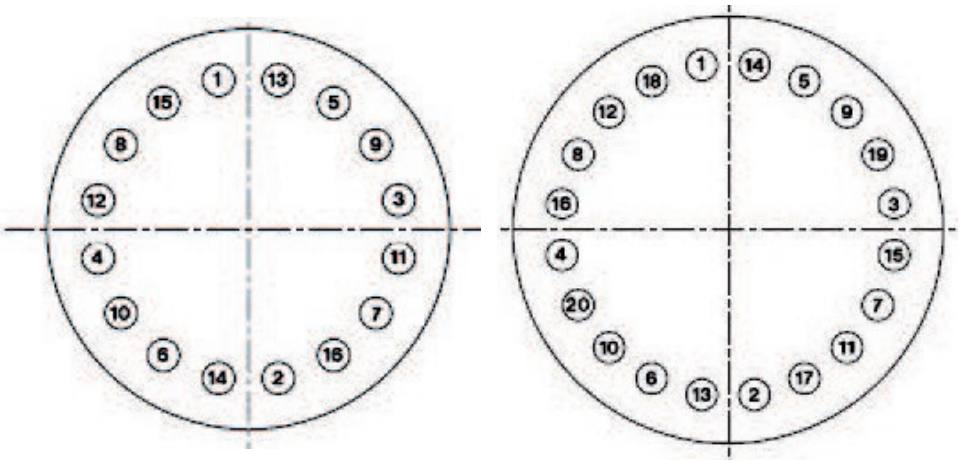

Flange with 16 bolts

Flange with 20 bolts

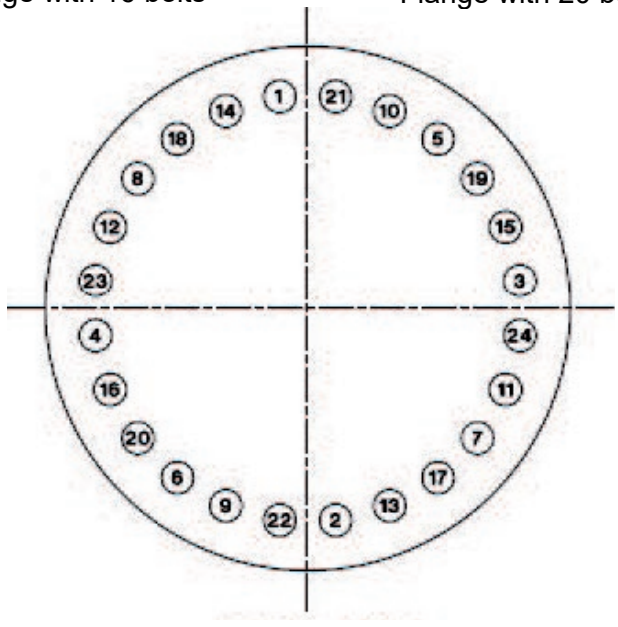

Flange with 24 bolts

Figure 1

3.0 Requirements using torque tables

Requirements torques according tables.

- Exempt are appendages which are mentioned in section “Appendages” of the IOM. For example three-piece ball valves, which torque is prescribed by the supplier of the equipment.
- Surfaces of the connected parts shall be made of carbon steel or stainless steel. Aluminium parts are excluded.
- Connecting piping systems with low or medium design pressure.
- Torque moments which have to be specified by the engineer in the drawing are:
  - piping components with special gaskets
  - constructions subjected to wind-, seismic- or extreme deadload.
- Coefficient of friction of 0,14 for bolt connections without grease.
- Coefficient of friction of 0,1 for bolt connections with grease.
- Construction parts. Torque at 90% of yield stress, corrected by:
  - permissible surface pressure under bolt head.
  - permissible shear stress in thread.
- Flange connections. Torque at 60% of yield stress, corrected by:
  - permissible surface pressure under bolt head.
  - permissible shear stress in thread.

4.0 Torques fasteners general parts grade 8.8

Nominal diameter [mm]	Pitch [mm]	Wrench size [mm]	Torque [Nm]
M6	1	10	12
M8	1,3	13	26
M10	1,5	16	62
M12	1,8	18	72
M16	2	24	140
M20	2,5	30	289
M24	3	36	518
M27	3	41	787
M30	3,5	46	1079
M36	4	55	1881

Table 1

5.0 Torques fasteners wind bracing EN 14399-4 grade 10.9

Nominal diameter [mm]	Pitch [mm]	Wrench size [mm]	Torque [Nm]
M16	2	27	200
M20	2,5	32	400
M24	3	41	600

Table 2

6.0 Torques fasteners separation flanges and separation plates EN 14399-4 grade 10.9

Nominal diameter [mm]	Pitch [mm]	Wrench size [mm]	Torque [Nm]
M16	2	27	200
M20	2,5	32	350
M24	3	41	700
M30	3,5	50	1300

Table 3

7.0 Torques slewing rings fasteners EN 14399-4 grade 10.9

Nominal diameter [mm]	Step 1 30% [Nm]	Step 2 80% [Nm]	Step 3 100% [Nm]
M12	28	74	92,9
M20	135	361	451

Table 4

8.0 Torques swivel joints grade A2/4-70

			Without grease μ = 0,14	With grease μ = 0,1
Nominal diameter [mm]	Pitch [mm]	Wrench size [mm]	Torque [Nm]	Torque [Nm]
M6	1	10	9	7
M8	1,3	13	22	16
M10	1,5	16	45	34
M12	1,8	18	72	54
M16	2	24	140	104
M20	2,5	30	289	215
M24	3	36	518	386
M27	3	41	510*	378
M30	3,5	46	701	521
M36	4	55	-	-

Table 5

NOTE:* due to larger crystal formation at the core, the fracture lines become shorter.
M27 bolts with higher guaranteed yield limit are very expensive. In addition, the use of these bolts requires extremely secure stock- and assembly management.
ISO 3506-1 (1997) has been followed until now. Next revision probably the requirements of ISO 3506-1 (2009) will be followed.

9.0 Torques insulating sets grade A2/4-70

			With Grease μ = 0,1
Nominal diameter [mm]	**Pitch [mm]**	**Wrench size [mm]**	**Torque [Nm]**
M10	1,5	16	34
M12	1,8	18	54
M16	2	24	90
M20	2,5	30	160
M24	3	36	180
M27	3	41	180
M30	3,5	46	180

Table 6

10.0 Torques flange connection ASTM A193GrB and ASTM A320GrL7

- Studbolts material ASTM A193 GrB with heavy hexagon nuts material ASTM A194 Gr2H.
- Studbolts material ASTM A320 GrL7 with heavy hexagon nuts material ASTM A194 Gr7.
- Nuts according ASME B18.2.2 Table 10 heavy hexagon nuts.
- Washers according F426 Type 1.

			Without grease	With grease
Nominal diameter [mm]	**Pitch [mm]**	**Wrench size [mm]**	**Torque [Nm]**	**Torque [Nm]**
1/2"	13 UNC	22,2	100	75
5/8"	11 UNC	27,0	195	146
3/4"	10 UNC	31,8	344	256
7/8"	9 UNC	36,5	546	406
1"	8 UNC	41,3	812	604
1 1/8"	8 UN	46,0	1181	875
1 1/4"	8 UN	50,8	1641	1212
1 1/2"	8 UN	60,3	2893	2127

Table 7

11.0 Torques flange connection ASTM A193GrB8 Class 1 and ASTM A320Gr8M Class 1

- Studbolts material ASTM A193 GrB8 Class 1 with heavy hexagon nuts material ASTM A194 Gr8.
- Studbolts material ASTM A320 GrB8M Class 1 with heavy hexagon nuts material ASTM A194 Gr8M.
- Nuts according ASME B18.2.2 Table 10 heavy hexagon nuts.
- Washers respectively according 18/8 304 en 18/10 316.

			Without grease	With grease
Nominal diameter [mm]	Pitch [mm]	Wrench size [mm]	Torque [Nm]	Torque [Nm]
1/2"	13 UNC	22,2	28	21
5/8"	11 UNC	27,0	53	40
3/4"	10 UNC	31,8	96	72
7/8"	9 UNC	36,5	153	114
1"	8 UNC	41,3	232	173
1 1/8"	8 UN	46,0	333	247
1 1/4"	8 UN	50,8	466	345
1 1/2"	8 UN	60,3	823	605

Table 8

12.0 Torques piping joints grade A2/4-70

- Ball valve connections.
- Non return valve at outboard.

Purge, drain or stripping line connection.

			Without grease μ = 0,14	With grease μ = 0,1
Nominal diameter [mm]	Pitch [mm]	Wrench size [mm]	Torque [Nm]	Torque [Nm]
M6	1	10	9	7
M8	1,3	13	22	16
M10	1,5	16	45	34
M12	1,8	18	72	54
M16	2	24	140	104
M20	2,5	30	289	215
M24	3	36	518	386
M27	3	41	510*	378
M30	3,5	46	701	521
M36	4	55	-	-

Table 9

NOTE:* see note Table 5

Break bolt ident nr.	Torque [Nm]	Breaktorque 3 bolts [kN]	Testpressure (barg)			
			SBV 2"	SBV 3"	SBV 4"	SBV 4" (6 bolts)
4669 1927	1,6	18,9	36,2	17,8	10,0	-
4669 1931	2,1	23,0	47,4	23,4	13,0	26,0
4669 1935	2,7	32,0	60,2	29,7	16,6	33,2
4669 1940	3,5	41,0	98,7	38,9	21,7	43,4

Table 10

Table is a copy of IOM instruction "466x0001Safety Breakvalve Operating and Maintenance Instructions".

1.0 Introduction

This instruction is applicable when:

- The particles stuck to the MLA affect operating the MLA.
- Aggressive, corrosive and/or dirt particles are stuck to the MLA.
- MLA needs cleaning for the representative considerations.
- The regulations of the plant prescribe MLA shall be cleaned.
- After long term storage (on site).

This instruction is intended for:

- Operators.
- MLA cleaners.

NOTE; do not carry out fire drills with seawater/saltwater. In case this cannot be prevented, after fire drills MLA shall be thoroughly washed with freshwater to prevent early corrosion.

2.0 Preparations

Minimum applicable tools:

- Freshwater.
- Gentle soap.
- Cloth or sponge.
- Pressure washer.
- Glide lock and harness.
- When safety stairs are not attached to the MLA use a cherry picker or scaffolding.

3.0 Safety

WARNING; to work safe, lock the MLA in the "maintenance position" by setting the hand levers of the hydraulic control on "LOCKED" see figure 1 and figure 2.

Figure 1 MLA-without ERC

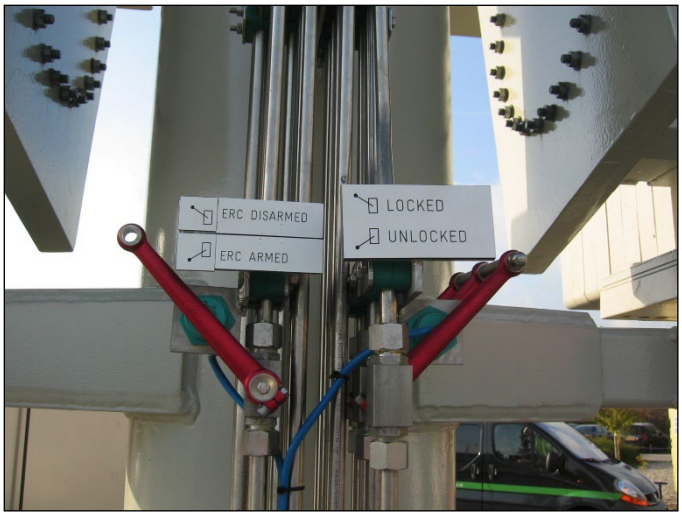

Figure 2 MLA with ERC

4.0 Cleaning

CAUTION; do not use aggressive soaps or seawater to clean the MLA.

CAUTION; do not use the pressure washer on swivel joints, bearings and seals of hydraulic cylinders.
This can damage the seals and force water in and forcing lubricant out.

CAUTION; the swivel joints, bearing and seals of the hydraulic cylinders shall be hand cleaned with a cloth or sponge in water with gentle soap.

NOTE; the construction and pipes of the MLA can be cleaned with a pressure washer, using freshwater with a gentle soap.

The location of the swivel joints, bearings and seals can be found in section 6 "Maintenance & Repair".

NOTE; in case of questions contact the Kanon Loading Equipment Service Department: +31 36 521 97 77.

KANON
LOADING EQUIPMENT

Installation, Operating and Maintenance manual

Section 3

General

The operating / maintenance personal should study the Installation, Operating- and Maintenance manual (**IOM**) prior to operating and / or performing maintenance on the loading arm.

- It is recommended to have the IOM available during maintenance work.
- The operating / maintenance personnel should wear protective gloves and a safety helmet during operation and / or maintenance.
- In case of maintenance or inspection, the loading arm should always be hydraulically and mechanically locked.
- In case the maintenance ladder on the loading arm is used for accessing the loading arm, the supplied safety harness and trolley should be used and connected to the safety rail of the maintenance ladder.
- Folding steps are provided on each ladder to supply additional support during maintenance or inspection work on most common locations.

Operating envelope

The loading arm is working in a certain area called operating envelope. This operating envelope is divided in a few areas: Connecting area, Drifting area, Operating area, Warning area and ERC Emergency area.

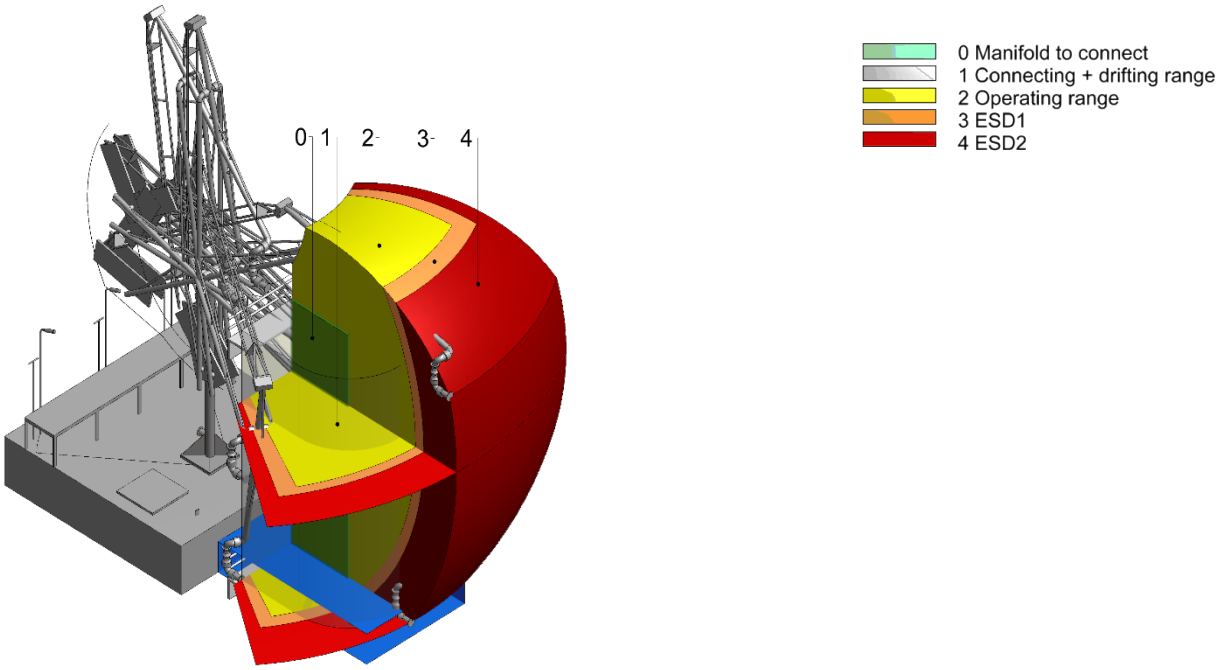

0+1. Connecting area + drifting area: The outer limit of this area is spherical. This is the area in which the loading arm is designed to work.

2. Operating area: This is the real area in which the loading arm can move freely during loading or unloading.

3. Warning area: As soon as the loading arm moves out of the working area forwards, sideways or upwards, a warning signal sound. Stop loading or unloading and move ship back into working area.

4. ERC Emergency area: Forwards and sideways an emergency release signal will be given as soon the loading arm enters this area. The emergency release coupling will be actuated.
The outer limit of this Area indicates the maximum reach of the loading arm. Attempts to move the loading arm outside these lines causes mechanical damage.

WARNING: On the top and at the bottom of the operating area (2) there are no warning areas as can be seen in the drawing. It is therefore strongly recommended not to exceed the height limits of the connection area (0).

Guarding

The operating envelope is guarded by proximity switches for the apex (up/down movements) and for rotation (left/right movements).

The Warning area can be reached during manoeuvring. The ERC Emergency area can be reached during testing ERC or loading.

Operating envelope during manoeuvring

If during manoeuvring the loading arm reaches the warning area the 1st stage or Pre-alarm will rise. The horn sounds intermittent, beacon and the indicator light “Arm in alarm” will turn on.
When the loading arm reaches the warning area it is not possible to move the arm any further. If you want to move the loading arm further to the ERC emergency area 1 the test-override key has to be switched ON (only during testing).
When the loading arm reaches the 2nd stage or ERC emergency area 1 the horn sounds constantly and the indicator light “Arm in alarm” is ON.

NOTE: Because the loading arm is in manoeuvring mode there will be no disconnection of the ERC.

Operating envelope during loading

If during loading the ship moves away from the jetty, the loading arm can reach the 1st stage or Pre-Alarm alarm area. The Pre-alarm will go off. The horn sounds intermittent and the indicator light “Arm in alarm” will turn on.
If the ship moves further away, the loading arm can reach the 2nd stage or ERC emergency area. The horn sounds constantly and the indicator light “Arm in alarm” is ON. The ERC will be activated (valves are closing and clamps are opening). The loading arm will be disconnected from the manifold. After disconnection the loading arm shall move upwards for a period of time automatically.

There is always a potential free output contact available for each stage indicating the same status so pumping can/should be stopped (see Functional Logic Diagram P__A90).

Notes:

1. Position A represents the maximum reach of the loading arm when it moves from the stored position and is connected. The loading arm cannot achieve a greater tilt-back position.

2. Dimension B indicates the maximum height of the deck above the reference point when the loading arm is connected. To create more space, the railing at the location of the manifold must be temporarily removed. This can also be achieved by connecting at low tide, with a ballasted ship, and using an uncompressed fender.

3. During unloading, there are no restrictions on the movement of the loading arm within the green and yellow areas of the operating area.

Marine Loading Arm				
#	Ident no.	TAG no.	Product	Diameter
1	P242068A10		CNG	16"
2	P242068B10		CNG	16"

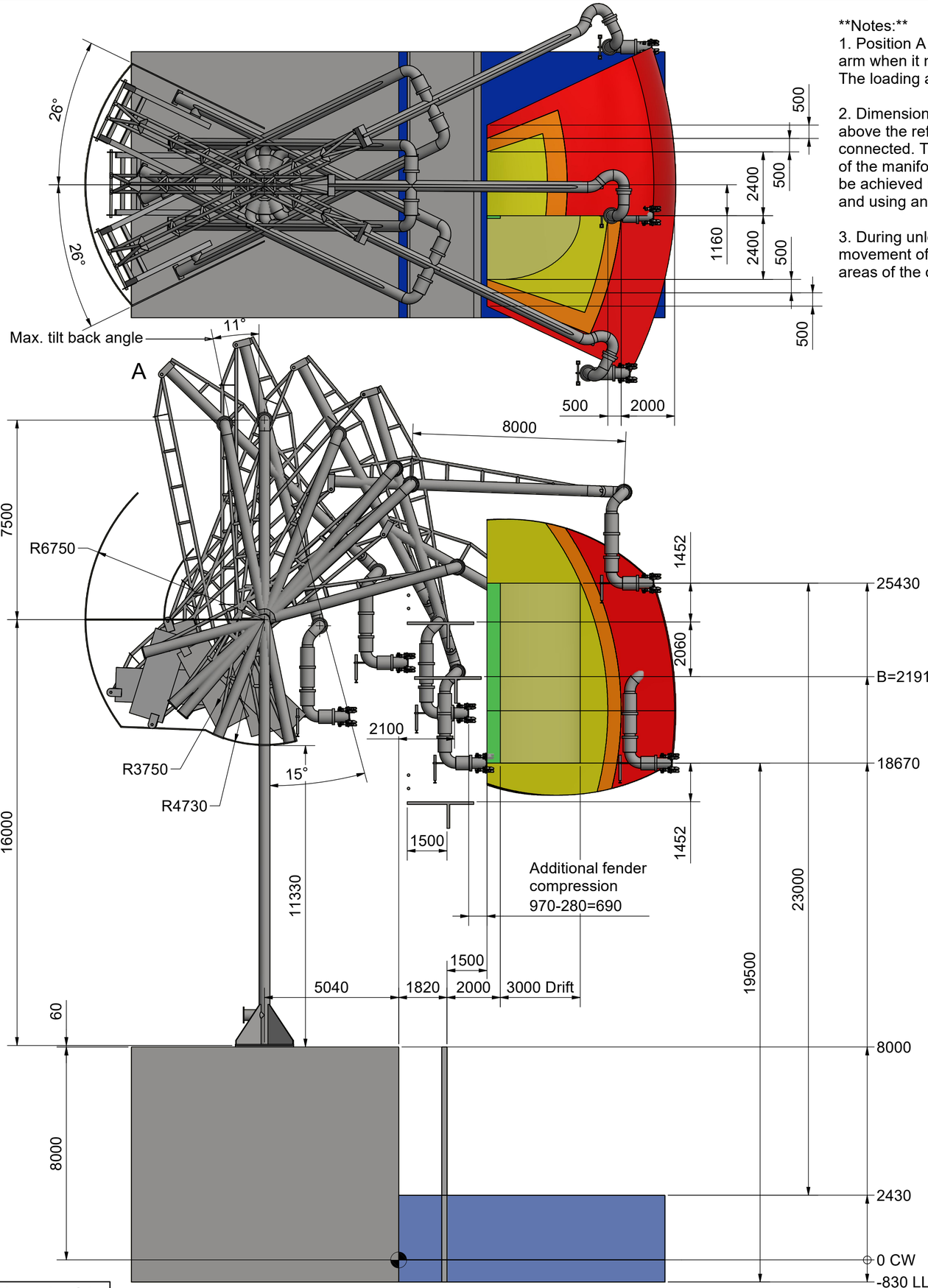

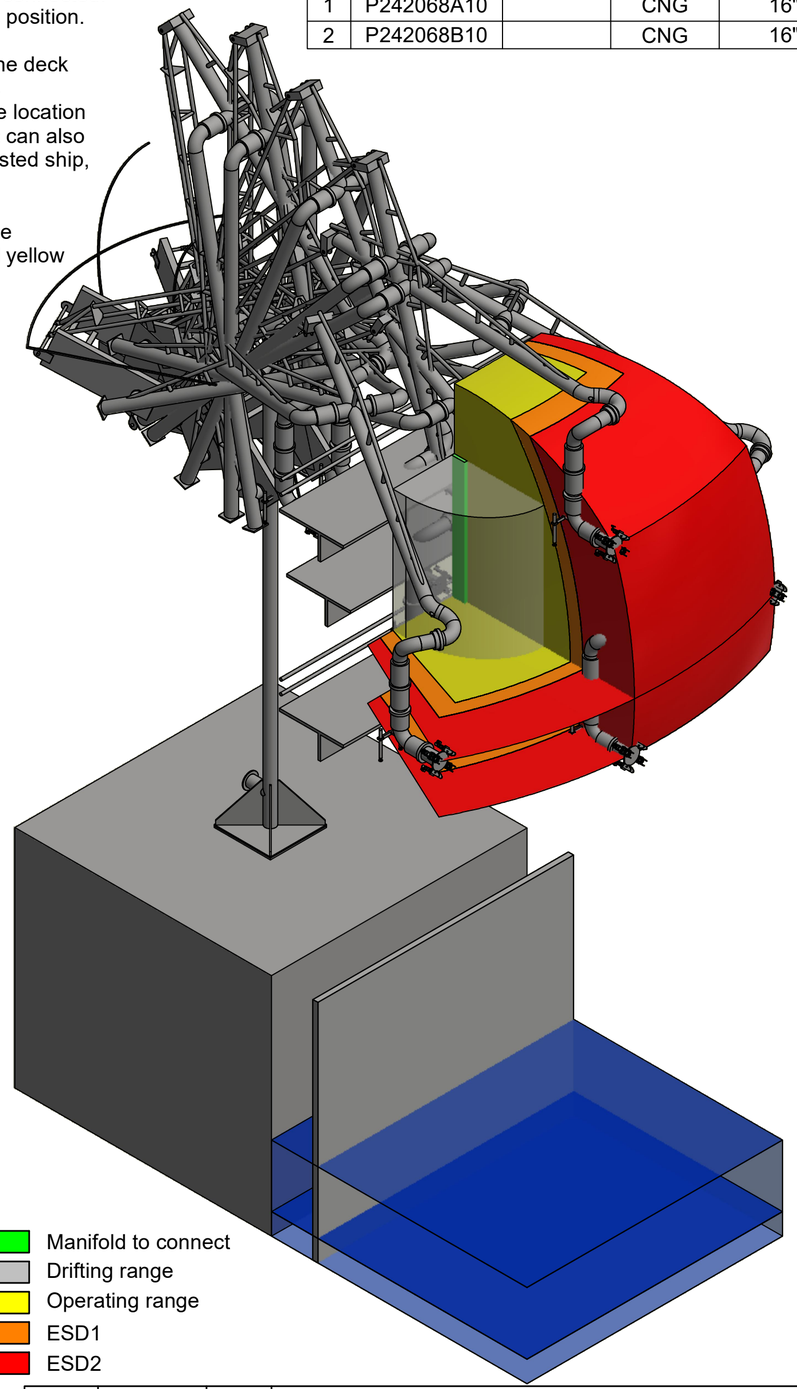

Revision			
Revision 5	17-12-2024	HFW	Corrected model and spotting line
Revision 4	9-12-2024	N.V.	Manifold height changed
Revision 3	03-12-2024	N.V.	Updated operating envelope
Revision 2	14-11-2024	N.V.	Changed manifold location and fender
Revision 1	08-11-2024	HFW	Add SUMED PORT to titel.

Check			Length -and angle tolerances acc. to KGR 100-02-EX-EN, class C	Form -and place tolerances acc. to ISO 2768-2, class K	Roughness according to ISO 4287, Ra in µm	Units in mm
Drawn	21-10-2024	N.V.				
Scale: 1 : 120		A2				

Operating envelope

MLA270 for SUMED PORT

KANON LOADING EQUIPMENT
P.O. Box 385, 3840 AJ Harderwijk

American Projection

Drawing number P242068A09

Revision 5

\\fserver.kle.local\Engineering\Projects\P242068\Engineering\Inventor\Drawings\A10\P242068A09.idw

This document is confidential and the information contained herein is a confidential disclosure. It is shown on the understanding it is not to be revealed to others or used for any other purpose without the written consent of KANON LOADING EQUIPMENT B.V.

Prices and delivery times are based on this operating envelope. Any changes in jetty, tidal or ship data resulting in change of working envelope will influence both price and delivery time.

Operating instructions

Check the following every time before operating the loading arm:

- Weather conditions (windspeed max. 22 m/sec).
- Electrical system (broken cables and connections etc).
- Hydraulic system (oil level, oil leakage and filter conditions etc).
- Free area around the loading arm.

Operating the loading arms

- Switch the hydraulic power pack on.
- Unlock the mechanical locking devices by pulling the handles down.
- Select “local”, “pendant “or “radio” and select the desired MLA on the panel.

Note; leave the handles down during operation.

- Move coupler of loading arm towards the ship, by using the manoeuvring functions:
  Up, Down, Ship, Shore, Left and Right on the selected control unit.
- Up and down is a combination of movements of inboard and outboard arm.
- Down: Inboard arm down and outboard arm towards ship.
- UP: Inboard arm up and outboard arm to shore.
- The other movements are singular.
- Connect the presentation flange (triple) of the loading arm to the flange of the ship.
- Switch loading arm to “FREEWHEEL” mode on the control unit.

The loading arm is ready to load.

- When the fluid transfer operation is completed drain the entire loading arm until it is free of product or gas.(002-006-037-00 purging and flushing CNG loading arm).
- Disconnect the loading arm from the ship.(014-999-004-00 connecting with the QCDC)
- Lock the locking devices by pushing the handles up.
- Move the loading arm to the stowed position.

1.0 Hydraulic locking device MLA with ERC on standpost/riser

Figure 1 Location of the hydraulic locking device MLA and ERC with detail A of the valves.
Figure 2 Possible positions of hydraulic locking device.
Figure 3 Possible positions of ERC arming valve.

1.1 MLA connected to a ship

- Hydraulic valves on the column of the riser in “UNLOCKED” position
- ERC arming valve in “ERC ARMED” position.

1.2 Maintenance work

- Hydraulic valves MLA in “locked” position, unless specific mentioned in the maintenance procedure, see section “Maintenance and Repair”.
- Hydraulic valves ERC in “disarmed” position unless specific mentioned in the maintenance procedure, see section “Maintenance and Repair”.

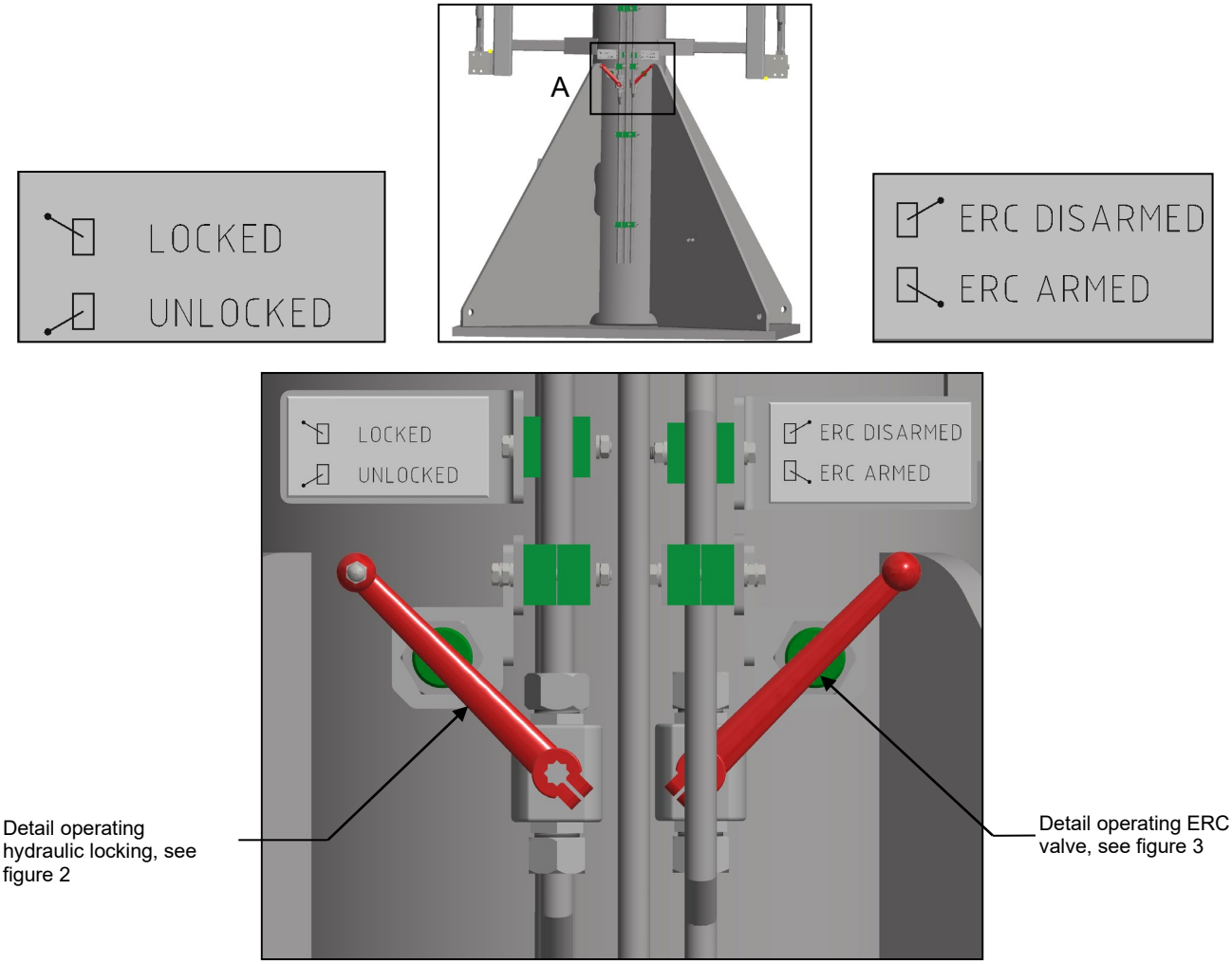

Detail A

Figure 1

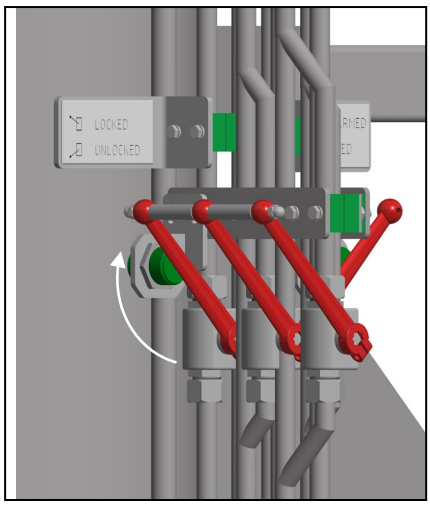

Hydraulic locking device:
Locked position

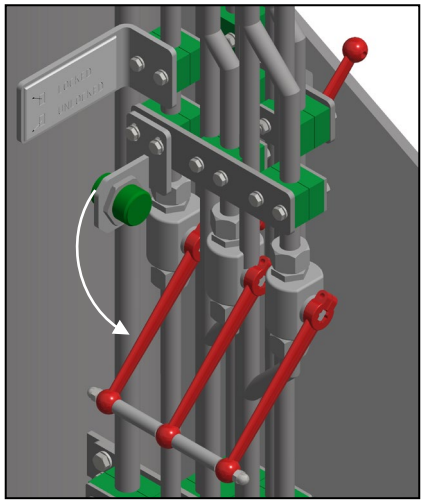

Hydraulic locking device:
Unlocked position

Figure 2

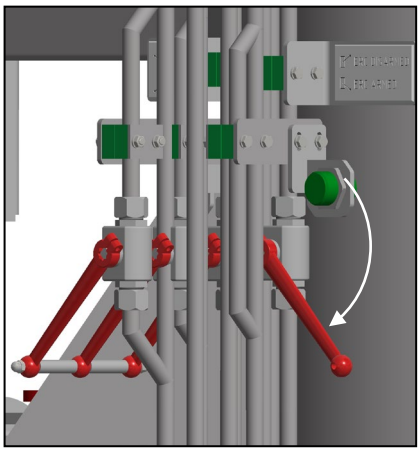

ERC arming valve:
ERC disarmed position

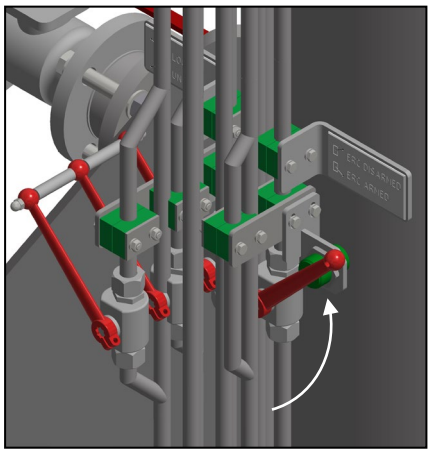

ERC arming valve:
ERC armed position

Figure 3

Relevant drawings in section 9

- *P_95 Hydraulic diagram valve block + part list;*
- *P_96 Hydraulic diagram power pack + part list;*
- *P_97 Outline drawing valve block;*
- *P_98 Outline drawing power pack;*

Drawings and parts lists to be found in section 9 of this manual

HYDRAULIC SYSTEM GENERAL.

To provide each loading arm with hydraulic power, the hydraulic system consists of a hydraulic power pack (HPP) and a hydraulic valve block (HVB) mounted on the loading arm. Both controlled by the Kanon PLC control system.

The HPP and valve blocks are installed in stainless steel cabinets. From the HPP, hydraulic piping (P and T lines) is going to the valve block of each loading arm (parallel connected).

See below a schematic overview of the Kanon hydraulic system.

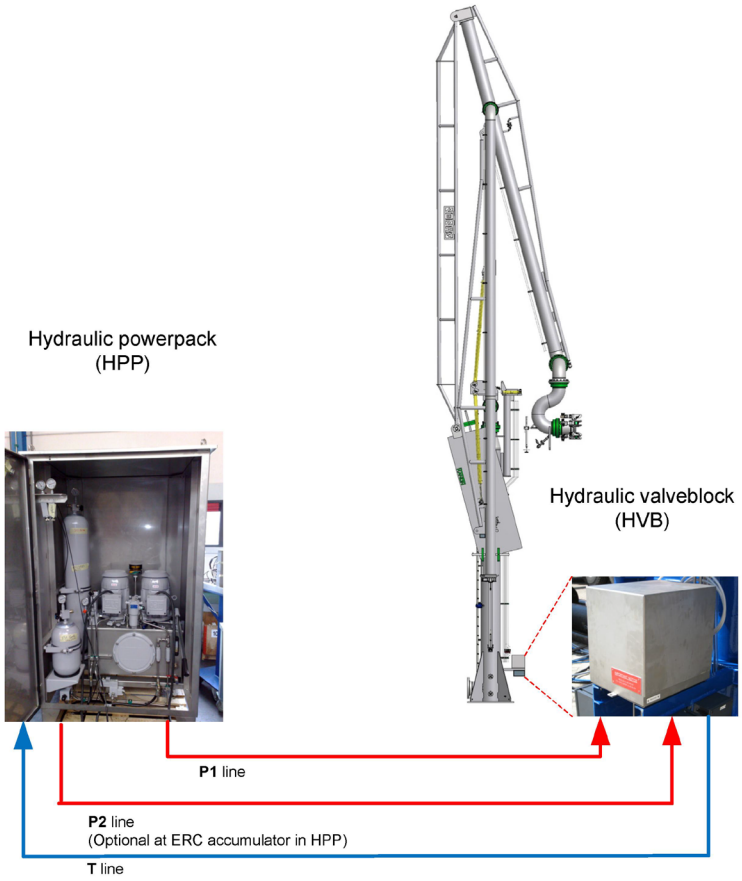

The HPP is equipped with one or two hydraulic pumps. During operation only one pump is running. The other pump is standby and can be selected with the pump-selector switch on the control panel.

In case of a ERC functionality on the loading arm a dedicated P2 line will be used.
The P2 line is connected to the hydraulic pump/accumulator in the HPP and the ERC cylinder on the loading arm to release the ERC.

If the accumulator is located at the HVB of the MLA no separate P2 line will be used.

At ERC option the hydraulic system is equipped with 1 accumulator (hydraulic battery). Inside this accumulator there is a rubber balloon pre-pressurised with nitrogen. If the power of the installation is on, the hydraulic pump keeps the accumulator under pressure.

The pressure switches installed on the accumulator guard the hydraulic pressure. This switch is installed in the P2 (E.R.C. accumulator) line of the hydraulic installation and detects the hydraulic pressure descend below the preset pressure.

If the power is on and the pressure in the accumulator drops below the setpoint of the LP switch (160 bar), the pump starts for 15 seconds. If it is not possible to pressurise the system within the 15 seconds the low oil pressure alarm will engage. The hydraulic pumps will be blocked and the horn & beacon are activated.
In this case: check the complete hydraulic system for leakage.

KANON ADVICE:
To be sure that both pumps get equal running hours select the other pump every month.

Hydraulic accumulator.

WARNING:
Nitrogen can affect your health and safety. Make sure there is sufficient ventilation when working with nitrogen. Never inhale nitrogen it can cause serious health problems!

Checking/Filling instructions for nitrogen in accumulator.

Principle sketch of accumulator and accessories see next page.
For pressure Po see the hydraulic schematic of the installation.

Preliminary safety measures.

→ Shut-off all electric power to PLC and E-motors.
→ Discharge the accumulator by slowly opening the safety block (*item A*) at the bottom of the accumulator.
→ Use only nitrogen *(N2)* to pressurize the accumulator. **In no case use oxygen!** *(EXPLOSION DANGER).*

Nitrogen pressure Po check.

→ Close the blow-off valve *(item B)*. If not, all the nitrogen will escape.
→ Open the valve *(item C)*, until the pressure can be read on the gauge *(item D)*.

Nitrogen pressure Po is to low.

→ Close the valve *(item C)*.
→ Connect a pressurizing, flexible hose to the filling connection *(item E).*
→ Connect the other end of the hose to a nitrogen source.
→ Open the valve *(item C)*.
→ Open the valve on the nitrogen source to a very moderate extent.
→ When the pressure Po is reached and stabilized, close the valve on the nitrogen source.

***Nitrogen pressure Po is to high*.**

→ Open the valve *(item B)* to let the nitrogen out of the accumulator, until *(after stabilization)* the desired pressure Po is read.
→ Nitrogen escapes into open air.

Nitrogen pressure Po is correct.

→ Close the valve *(item C)*.
→ Close the valve on the nitrogen source.
→ Disconnect the flexible hose between filling connection and nitrogen source.
→ Shortly open the valve *(item B)* to blow off the pressure of the gauge *(item D).*
→ Close the valve of the safety block *(item A)* at the bottom of the accumulator.

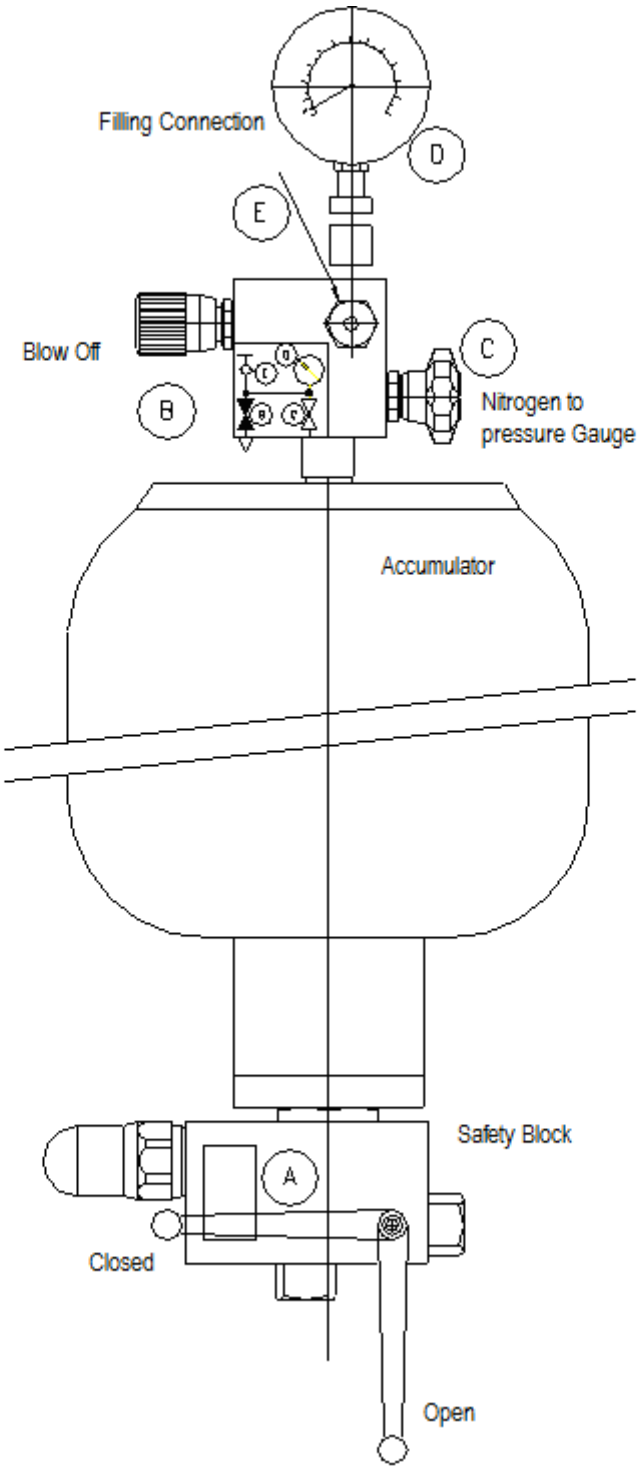

Initial start-up procedure hydraulic power pack (HPP).

The initial start up for each HPP must take place in the following sequence:

1). When a hydraulic accumulator is installed, follow instructions on page 2.

2). Connect all necessary electrical wiring and hydraulic piping etc. according to the diagrams and fill the oil tank with clean approved oil.

3). Check the direction of rotation of the electric motor. It must be the same as the arrow on the electrical motor (see picture).

When rotation is wrong: change the electrical wiring connections at the electrical motor and check the rotation again.

NOTE:
It is not allowed to use the HPP when direction of the electrical motor(s) is wrong.
It will damage the hydraulics pump(s) in a short time!

Rotation signs on the electrical motor.

4). When the rotation is correct, the air must be taken out of the hydraulic pump to ensure lubrication and cooling of the pump at all times.

NOTE:
Operation of the pump with air inside will damage the pump in a short time!

To get the air out of the pump the following must be done:
→ Turn the electrical motor on for a short time (2 seconds);
→ After the 2 seconds turn the electrical motor off;
→ Wait for 10 – 15 seconds;
→ Repeat this 5 - 10 times.

After this the air is out of the pump and provides the system with sufficient pressure and flow.

5). Run the pump for 5 minutes.

6). The system is ready for use.

Maintenance on hydraulic system.

NOTE:
During maintenance and inspection the control panel must be shut down and the maintenance switch, inside the HPP be switched off as well and locked.(lototo)

The Kanon hydraulic system requires some maintenance and inspections.
Every 3 months the following needs to be checked (see for reference picture below):

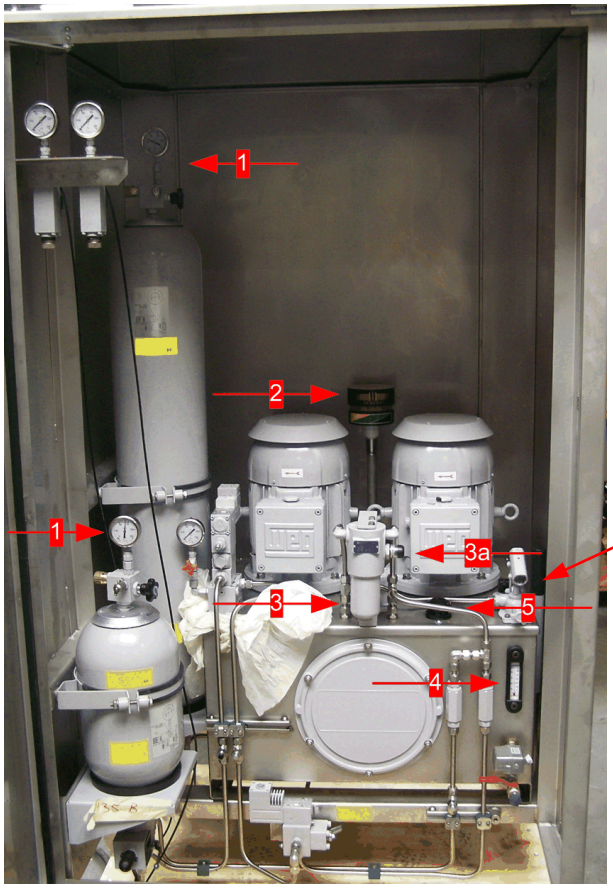

Use the handle at the side of the oil tank to operate the hand pump.

1). Check if there is enough nitrogen pressure in the hydraulic accumulator (in case of an ERC).
Empty the accumulator slowly by opening the safety block below the accumulator.
All hydraulic oil inside the accumulator will flow to the oil tank. Check the pressure gauge on top of the accumulator (see point 1). For the correct pressure check the Hydraulic diagram in section 9 of this IOM.
At nitrogen pressure < 120 bar or < 80 bar, increase the nitrogen pressure as described on pages 2 and 3.

2). Check the air reconditioner.
The air reconditioner (see point 2) keeps moisture out of the oil during level fluctuations. The status of this air reconditioner can be checked by the colour of the filling. Yellow is OK, green is in between and black is replace ASAP.

3). Check the pressure and return filters.

The HPP is equipped with a pressure filter (see point 3) and a return filter (mounted on the oil tank). Each filter has an indicator (see point 3a).
If the indicator colours green ➔ no replacement needed.
If the indicator colours red ➔ replacement is needed.
Contact the Kanon Loading Equipment Service department for ordering the correct filter element.
This to prevent damage to the hydraulic system.

4). Check the oil level in oil tank.

The oil tank is equipped with an oil level indicator (see point 4). Check the oil level with emptied accumulators. At low level please add oil via the filler cap (see point 5).

5). Operate the hand pump.

Move the handle up and down a few times and leave it in the down position. This is enough to keep the hand pump lubricated.

OPERATING THE HYDRAULIC SYSTEM IN CASE OF PUMP OR POWER FAILURE.

In case of hydraulic power failure (pumps) or total power failure, the hydraulic system is equipped with a hand pump (see under 5 at previous page).

With this hand pump it is possible to manoeuvre the loading arm back to parking position. In case of total power failure it is possible to bring back the loading arm to stowed position.

In the event a hydraulic QCDC is provided, the disconnecting procedure can be found in section 4 of this manual.

NOTE:
Use the hand pump only to bring the (completely drained) loading arm back in parking position, in case of an emergency.

HYDRAULIC POWER FAILURE:

- If required open the hydraulic lock.
- Select the manoeuvring mode on the control panel.
- Set the control switch on the control panel to local.
- Operate required movement on the control panel.
- Operate the hand pump.

The loading arm will move very slowly. After the loading arm has reached stored position, shut down the installation according the operating instructions.

TOTAL POWER FAILURE:

If required open the hydraulic lock of the loading arm.

Open the door of the closet where the hydraulic valve block is located.

For the actions described below, see pictures on the next page.

- **Operate manually** the required function on the hydraulic valve block-manoeuvring solenoid Y9.1, Y9.2 or Y9.3 by pushing the pin on the solenoid.

- **At the same time**, also push the pin of the solenoid for the manoeuvring function Y1/Y2, Y3/Y4 or Y5/Y6 (front/back of the solenoid).

NOTE:
The pins at the combined solenoid valves and the hand pump must be operated at the same time.

NOTE:
For the correct solenoids see the hydraulic diagram (P__A95 drawing).

- **Operate the hand pump.**

  The loading arm will move very slowly. After the loading arm has reached the stowed position shut the hydraulic lock.

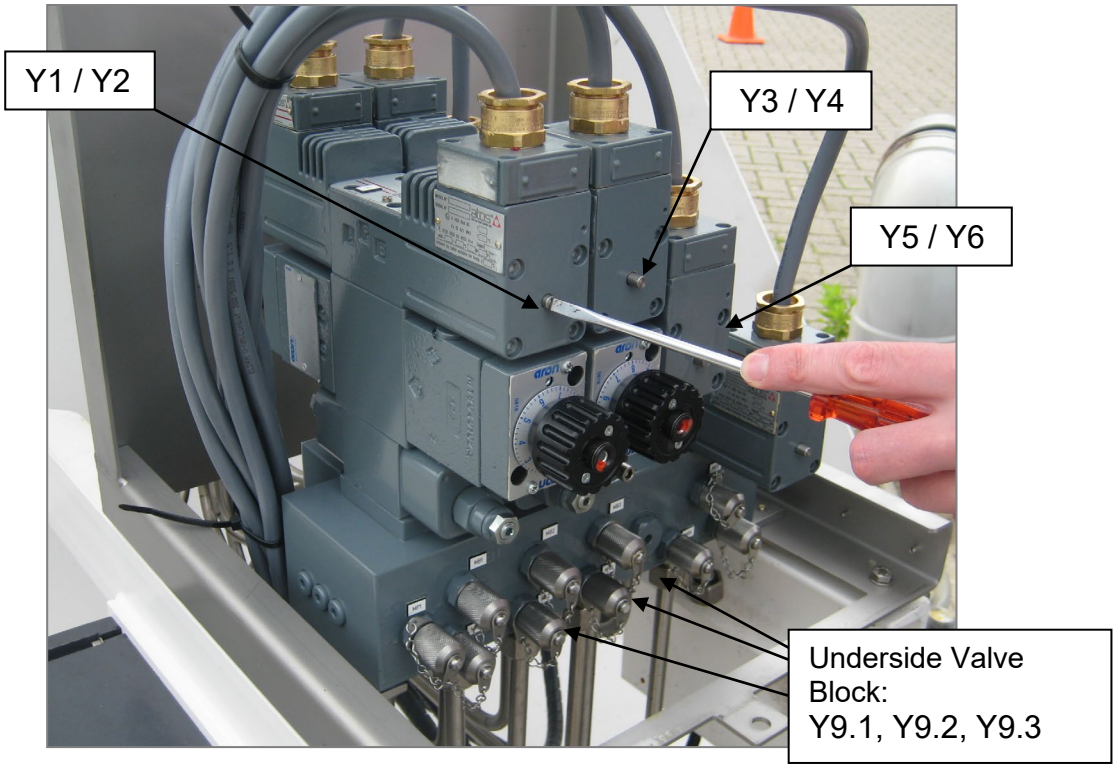

Example:Y5/Y6

Y6

Y5

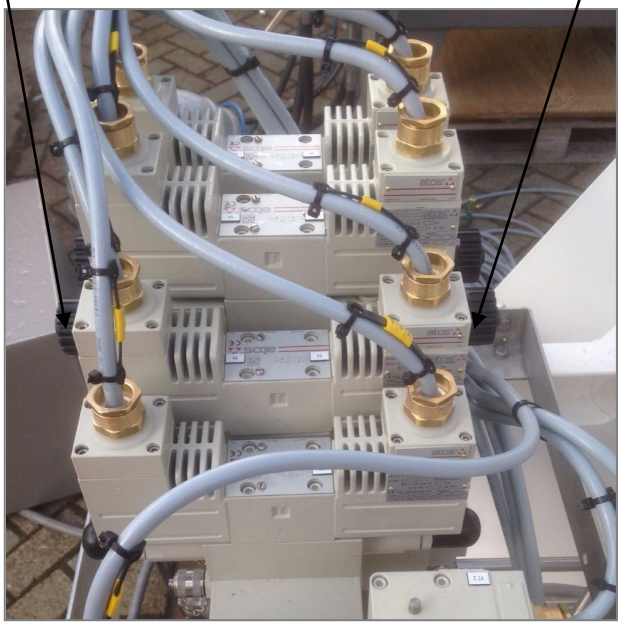

Underside Valve Block:
Y9.1, Y9.2, Y9.3

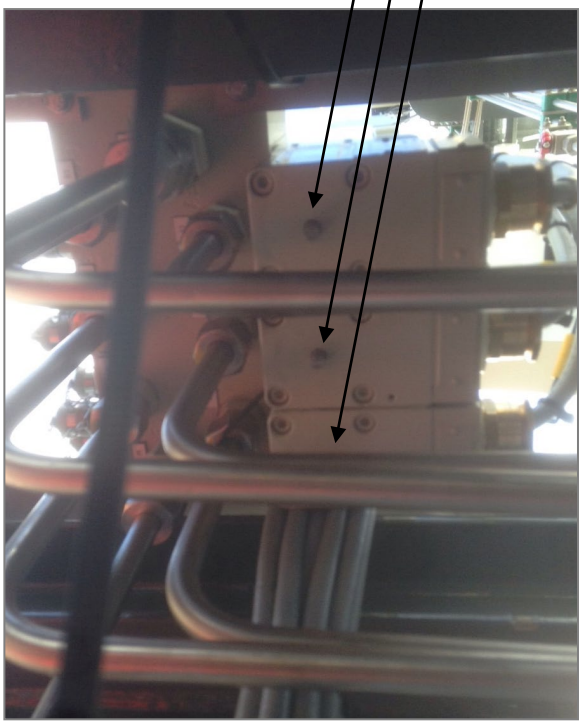

Do not connect this way

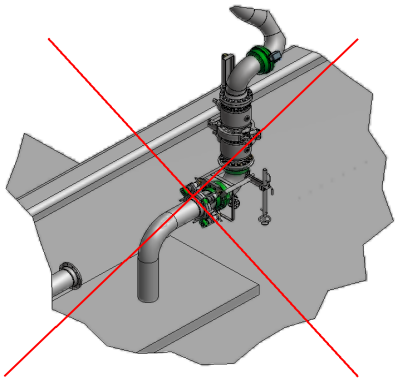

Pitching movements of the ship are not compensated by the swivel joints when the coupler is not right connected.
If the MLA does have to be connected this way, use a 90° elbow piece mounted on the ship-flange before connecting the coupler to the ship.

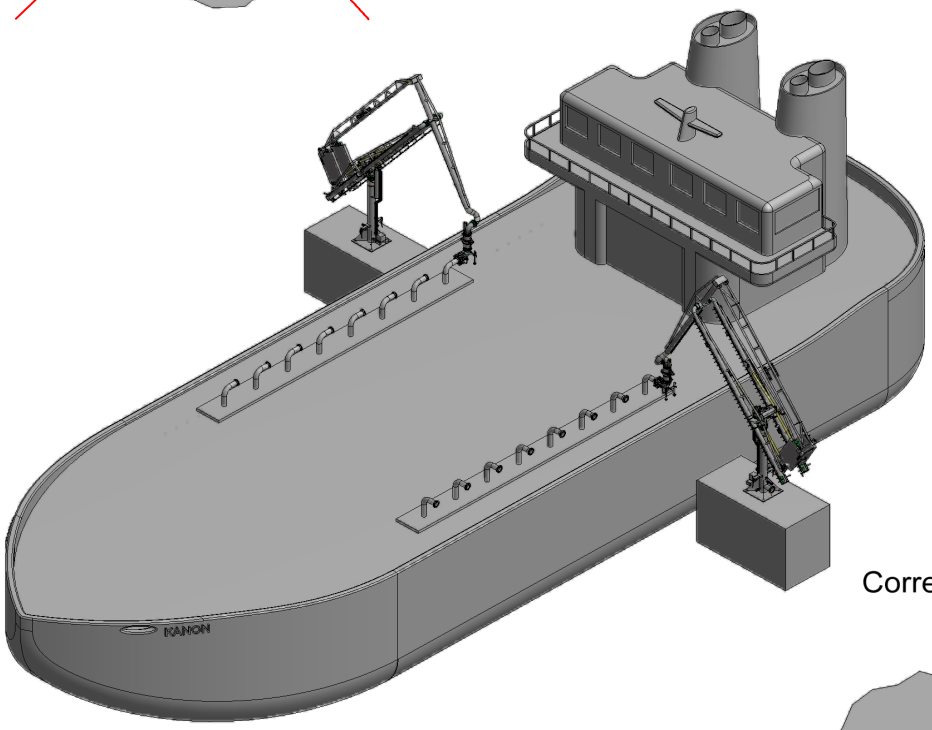

Pitching movements of the ship are compensated by the swivel joints when the coupler is connected on the right way.

Correct connection

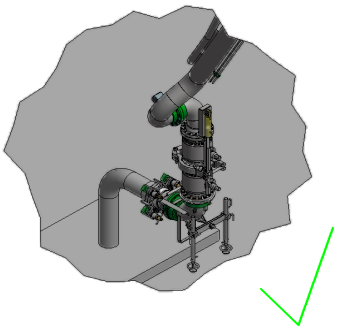

Note: The coupler flange must always be connected parallel to the Jetty.

1.0 Introduction

This instruction is intended for:

- MLA-operators.
- General maintenance crews.

This Kanon instruction shall be used as a reference for operating & maintenance of the equipment, locking inboards to riser. In this Kanon instruction the different versions of locking devices are explained. For the applied / correct version, check drawing P__10, in section “Drawings as built’ of the Installation, Operation & Maintenance manual.

2.0 Safety

Study document “002-001-000-00, General safety requirements MLA” carefully. Section 1.

WARNING; not following the steps described in this instruction may result in serious injuries and damaged equipment.

3.0 Parts description

3.1 Spring loaded unit

The locking pin slides through the spring unit. The purpose of the spring unit is to ensure the locking pin locks the inboard by spring pressure

.

The following types of spring units are available:

- Standard version (figure 1).
- Lever lock (figure 2).
- Extended lever (figure 3).

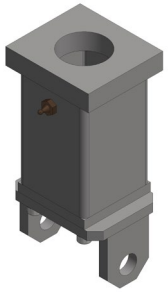

Image 1

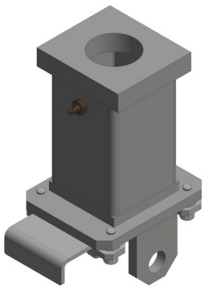

Image 2

Image 3

3.2 Levers

The lever is used to lock and unlock the locking device.
There are two versions of the lever:

- Standard version (figure 4).
- Lever with extension (figure 5).

The chosen version depends on the location of the locking device(s) in the MLA..

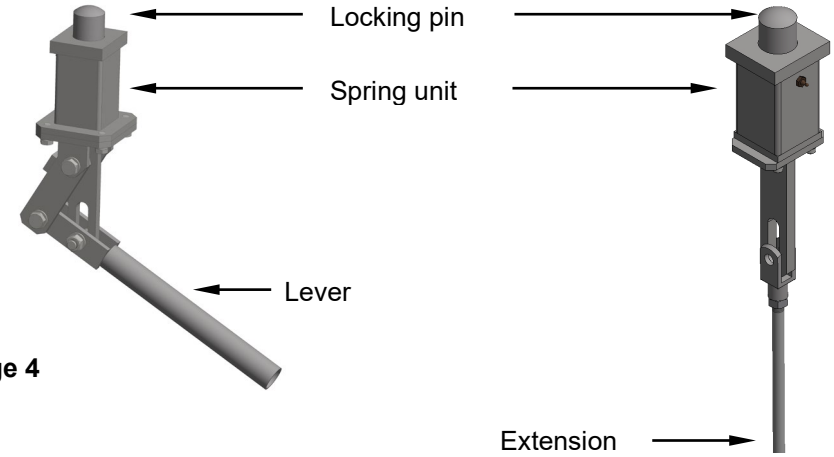

image 4

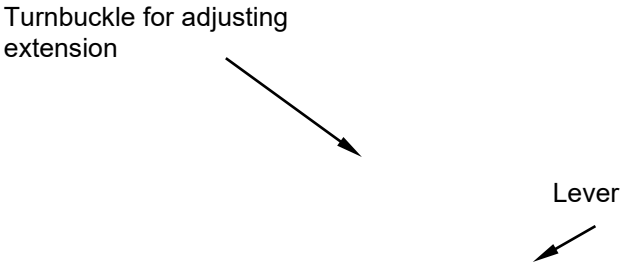

Image 5

3.3 Pin maintenance device inboard

The pin maintenance device inboard is used:

- As a lock during maintenance and repair.
- As a storm lock.
- As a lock during transportation..

For the installation procedure of the pin maintenance device inboard see “4.0 procedure installing pin maintenance device inboard in reverse position”. Item numbering in this procedure refers to figure 7. When the MLA has two inboards, this procedure shall be performed at the pins of both devices.

4.0 Procedure installing pin maintenance device inboard in reverse position

1. Disassemble hexagonal screws and washers (1, 2).
2. Place the pin maintenance device inboard the other way around on the lock plate (figure 8).
3. Assemble hexagonal screws and washers (1, 2).

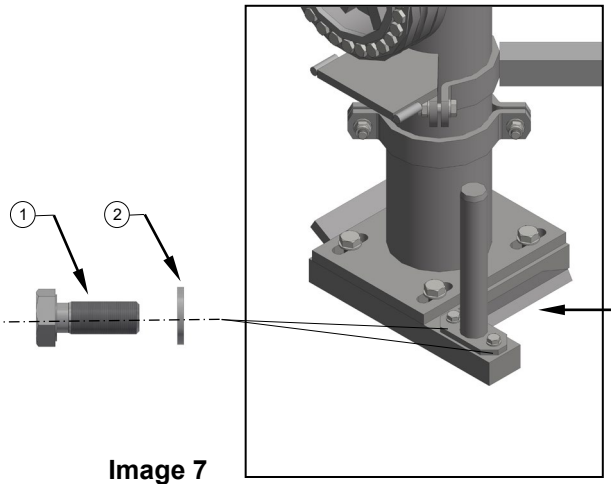

Image 7

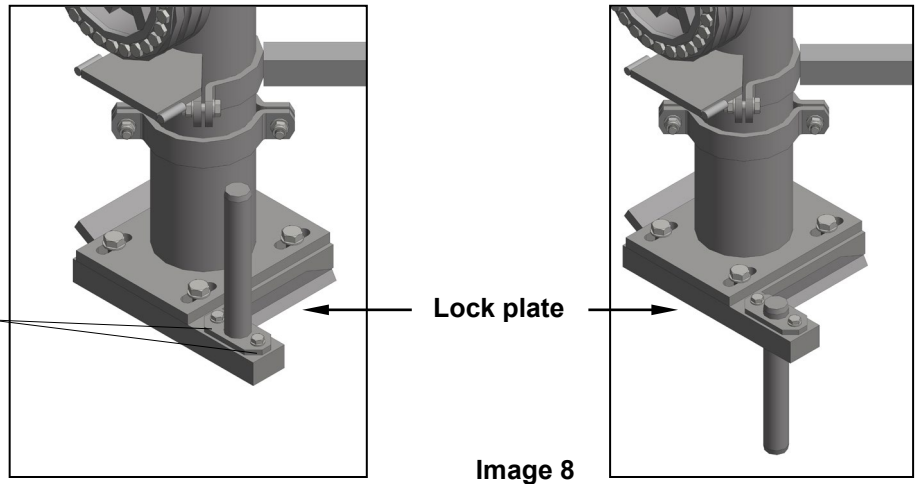

Image 8

5.0 Stay bolt

In some cases a stay bolt (A, figure 9 and 10) is part of the MLA's maintenance device inboard.
The stay bolt is only used when replacing the swivel-seals is necessary.
See Kanon instructions for replacing product seals swivel joints . Section 6
The stay bolt will keep the inboard in the upright position during maintenance. In this situation, locking device levers are in the up (locked) position and pins maintenance device inboard are in locked position (see figures 9 and 10).

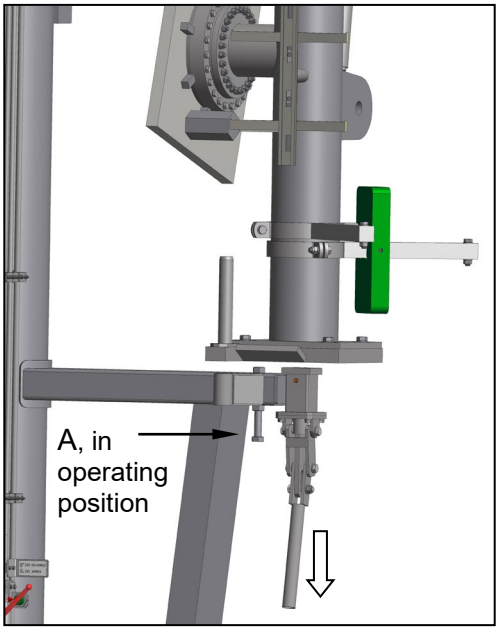

Image 9

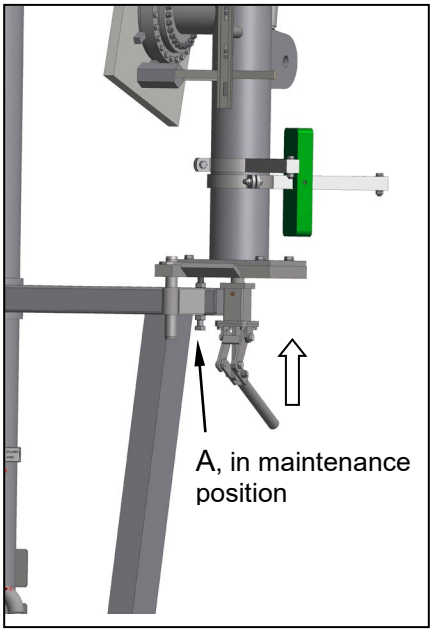

Image 10

6.0 Locked position for transport and maintenance

For the locked position for transport and maintenance the figures 11 and 12 are applicable.
During transport and maintenance, the pin maintenance device inboard (C) is in transport position.
The locking device (B) is locked, with levers in upward position. See figure 11 and 12.

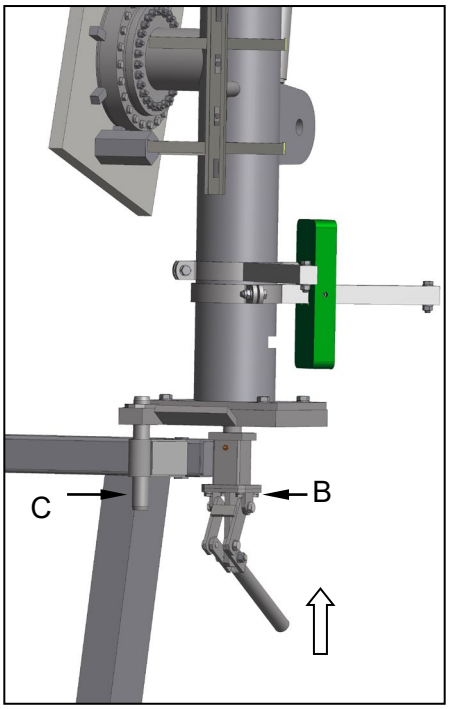

Image 11

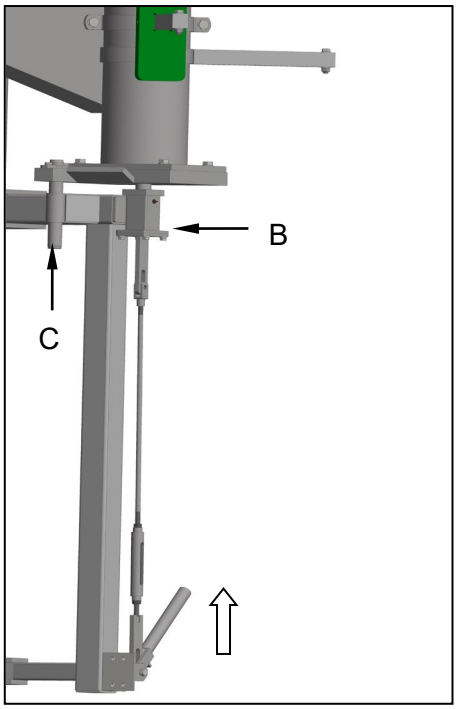

Image 12

7.0 Stored position

For stored position, see figures 13 and 14. In the stored position the locking device are locked with the lever in the up position.

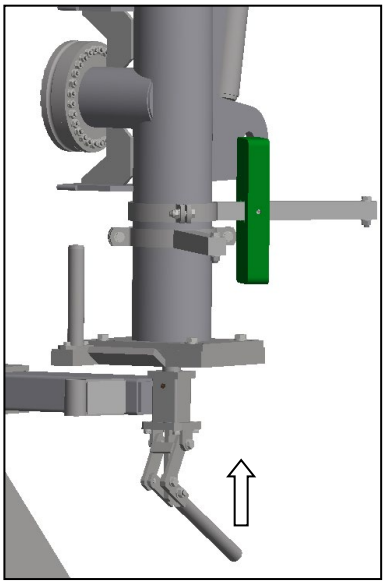

Image 13

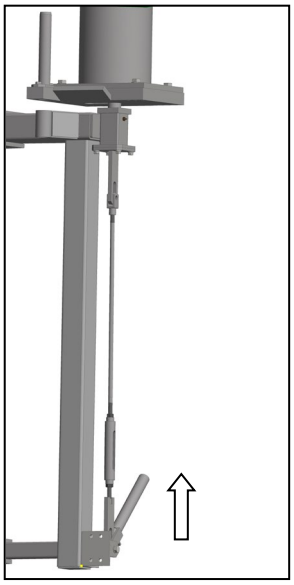

Image 14

8.0 Operation position

For operational position see figures 15 and 16. In operation position the locking device is unlocked with lever in the down position.

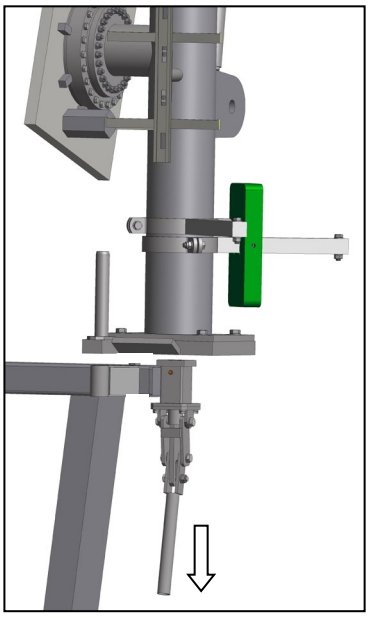

Image 15

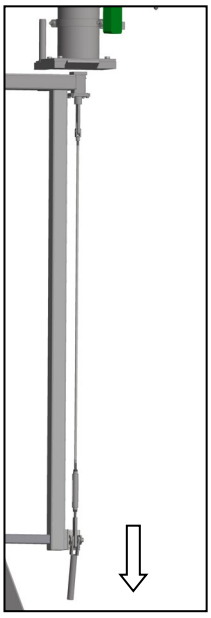

Image 16

1.0 Introduction

The support jack Is mounted on the triple assembly (last elbow) and has adjustable legs. This support can be adjusted to the ships deck. The additional weight of the transported product in the arm is absorbed by the ships deck.

This instruction is intended for:

- Operators.
- Service engineers Kanon Loading Equipment BV.
- Service engineers assigned by Kanon Loading Equipment BV.

This instruction to be used when:

- Doubts in the correct use of the support jack.

For this instruction a triple is used with a manual QCDC and no vapour return. The use of the support jack is the same for every triple.

2.0 Preparations

Read document “002-001-000-01, General safety requirements MLA” thoroughly.

WARNING; not complying with this instruction may result in serious injuries and damaged equipment.

NOTE; movement of the loading arm may be necessary while setting the support jack. Operate with care.

NOTE; in case of doubt please contact the Kanon Loading Equipment Service Department at: +31 36 52 19 777.

- Procedure

NOTE; the numbers given in this procedure are referring to image 1.

1. In stored position and during operating the support jack shall be in horizontal position. Visually checking if the horizontal beam (4) is in horizontal position should be sufficient. If in doubt, a spirit level (1) can be used.

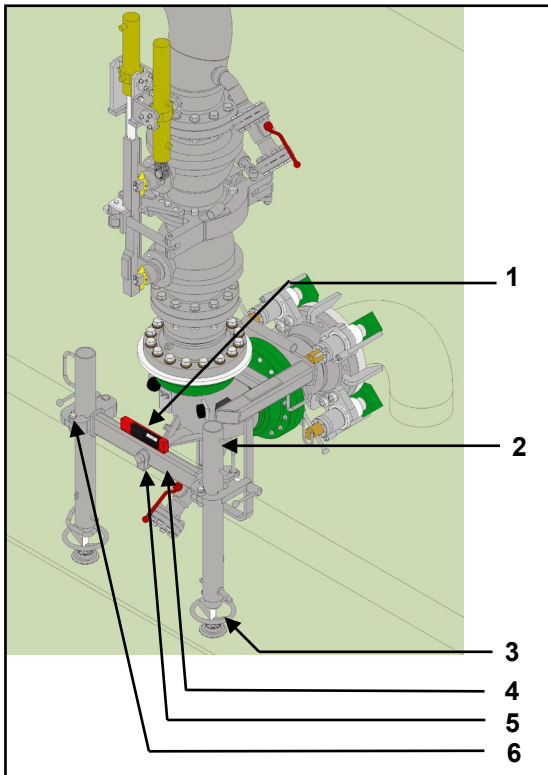

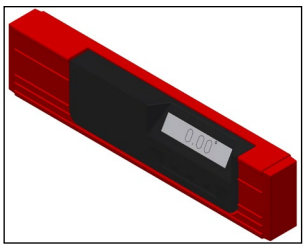

1 Spiritevel (optional)
To set the support jack horizontal.

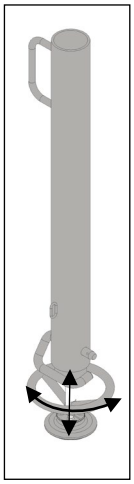

2 (2x) Support jack legs, can move up/down.

3 (2x) Support jack leg feet, can be turned left (shortening) or right (lengthening) the pipe support jack.

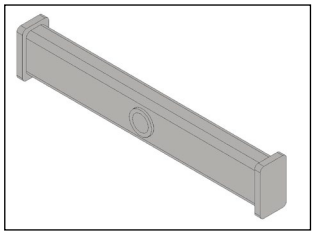

4 Horizontal beam

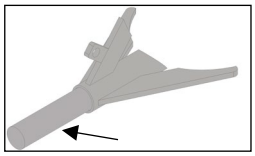

5 Support jack pin

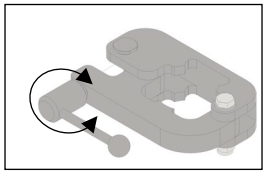

6 (2x) Support leg clamp
For clamping the pipe support.
Turn handle right for clamping and left for loosening.

Image 1

2. When support jack is not leveled.
   Correct the support jack legs (2) by setting the support on the same height.

WARNING; when the supports jack leg (2) are firmly clamped and the triple is eventually set in position. The support jack legs (2) are forced to slide trough the support jack clamps (6), see image 2. This may resolve in damaging the supports.

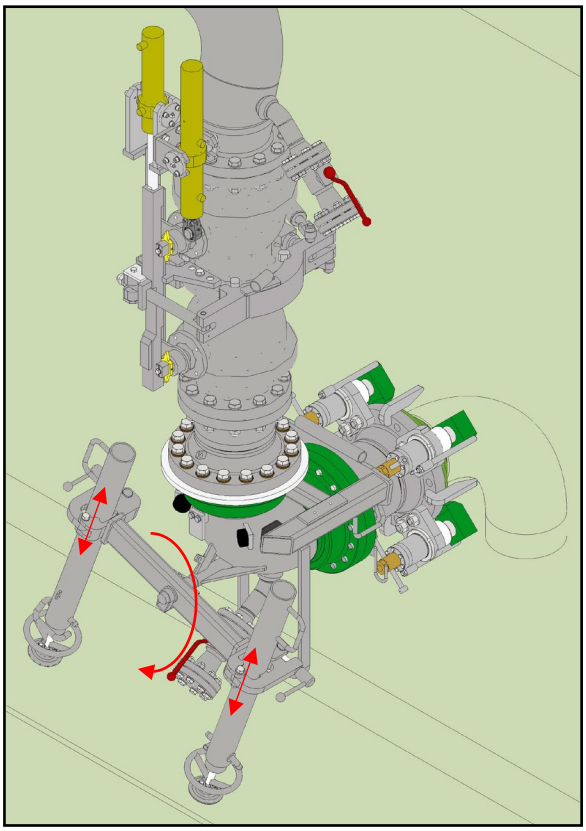

Image 2

During operating the legs (2) of the support jack can be moved up using the lever of the support leg clamps (6).

NOTE; be aware that the support jack legs (2) do not obstruct during connection to the ship. This can result in damaging the support jack, triple or ship.

3. Manoeuvre the loading arm to the ships connecting flange.
4. Connect the loading arm to the ships flange.
5. set the loading arm to freewheel mode.
6. Loosen the support jack legs (2) using the lever of the support leg clamps (6), untill they are resting on the ships deck.
7. Visually check the support beam (4) is in horizontal position, if in doubt a spiritlevel can be used.
8. Clamp the support jack legs (2) firmly by hand, using the levers (6).
9. Adjust the support jacks feet (3) until there is some tension between support jack pin (5) and support jack leg feet (3).
10. The support jack is set for (un)loading.

Output from control system	Operating proces flow	Actions

NOTE: During normal operation ERC test bolts should be removed at all times.

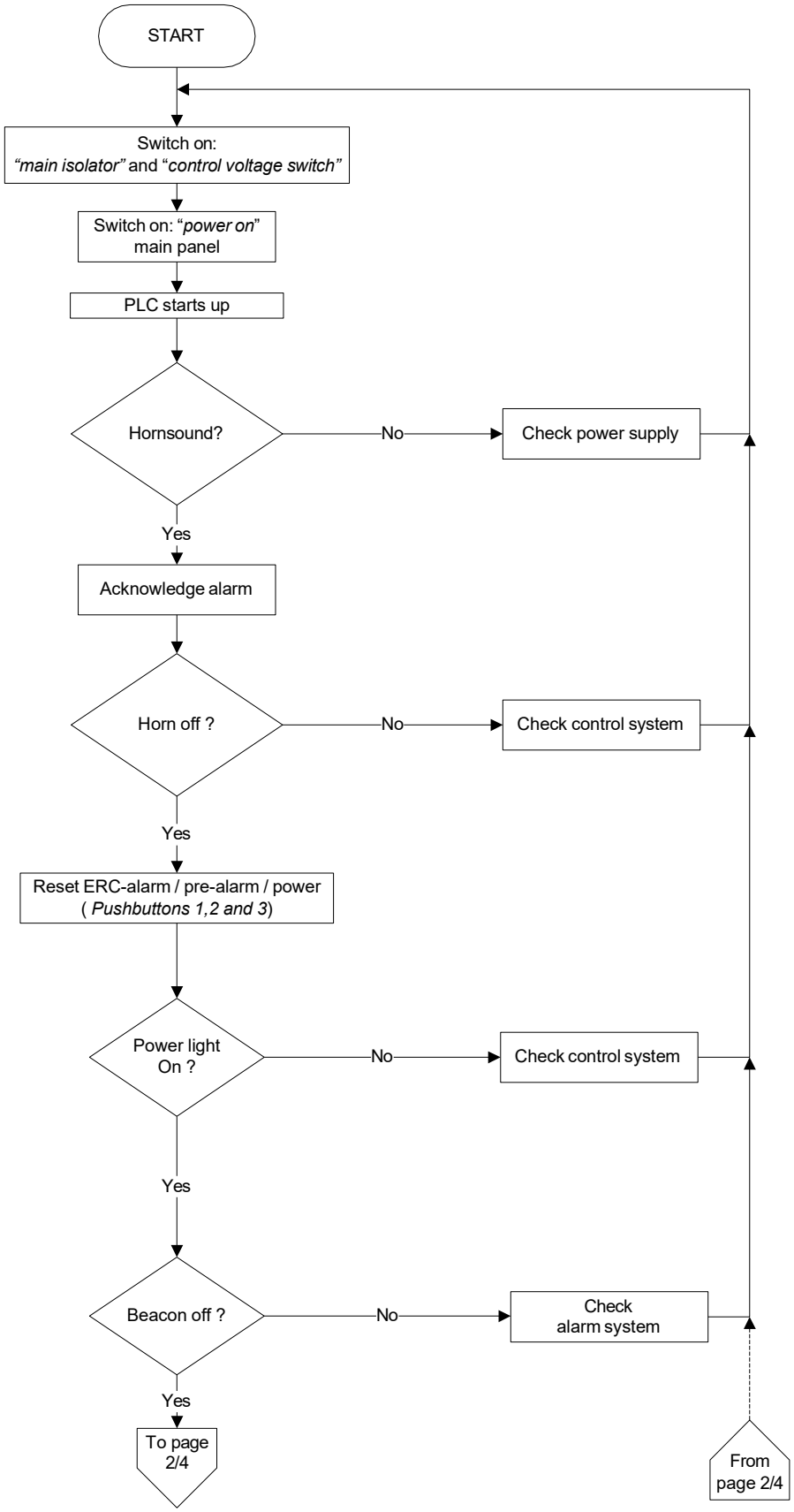

Output from control system	Operating proces flow	Actions

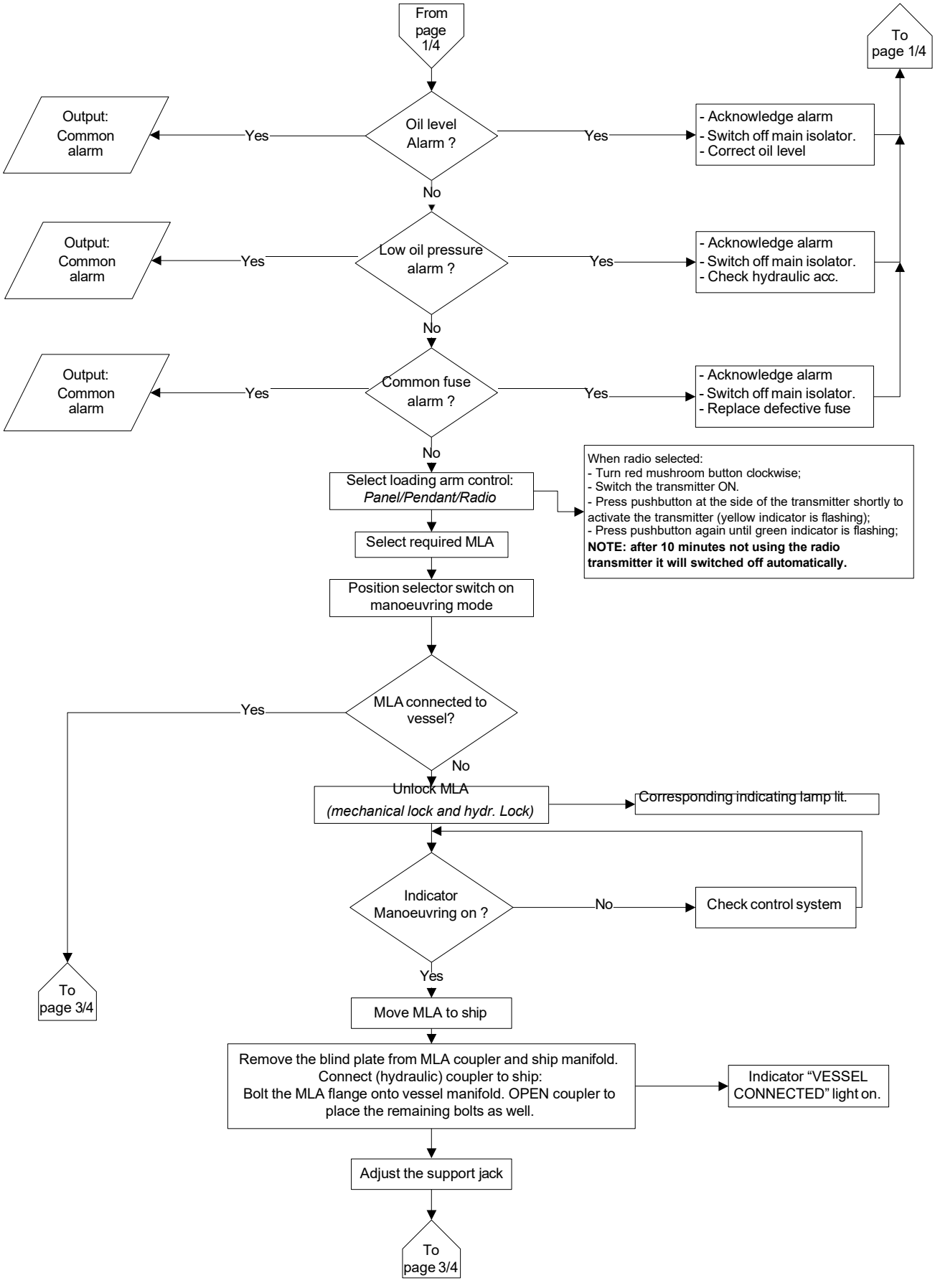

Output from control system	Operating proces flow	Actions

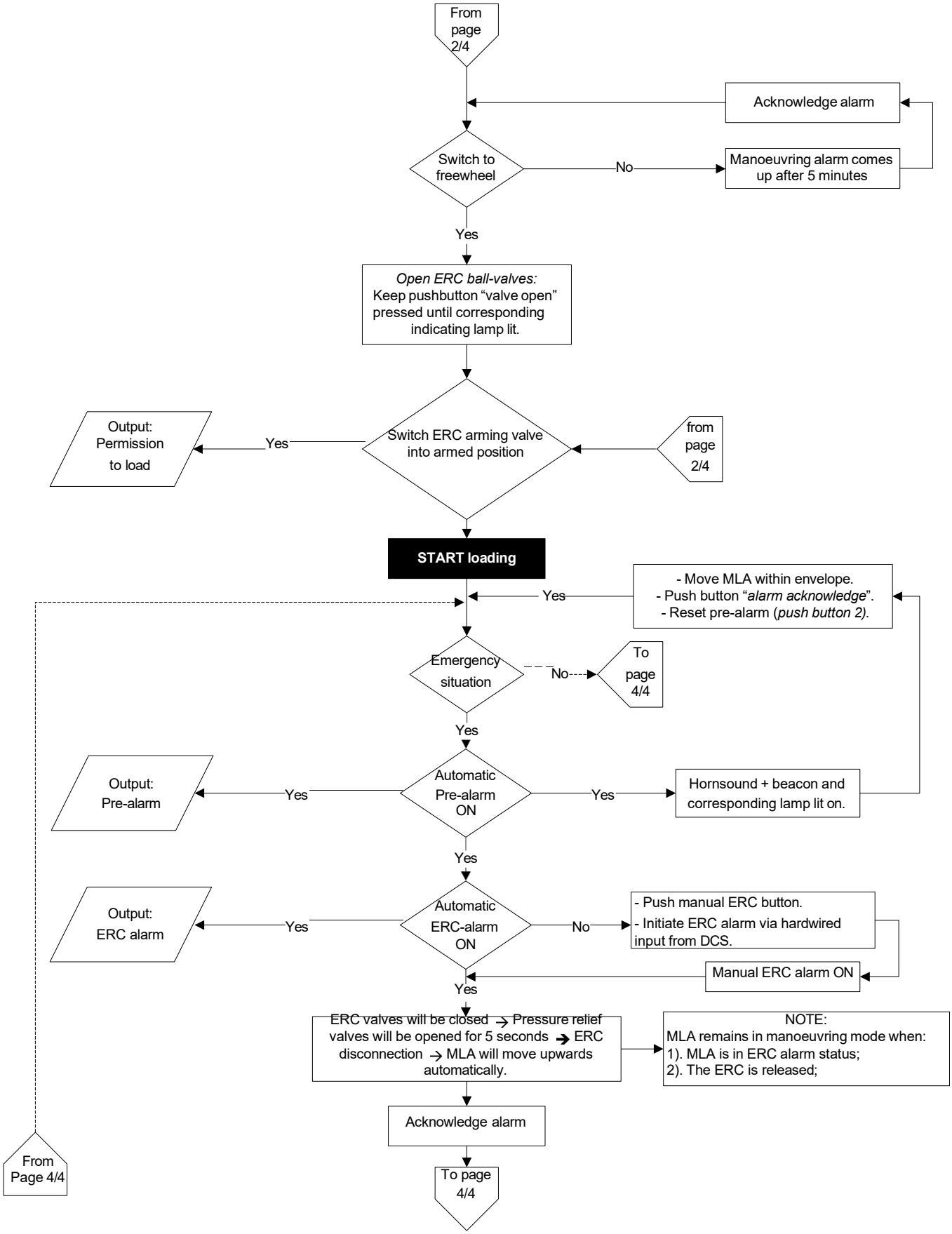

Output from control system	Operating proces flow	Actions

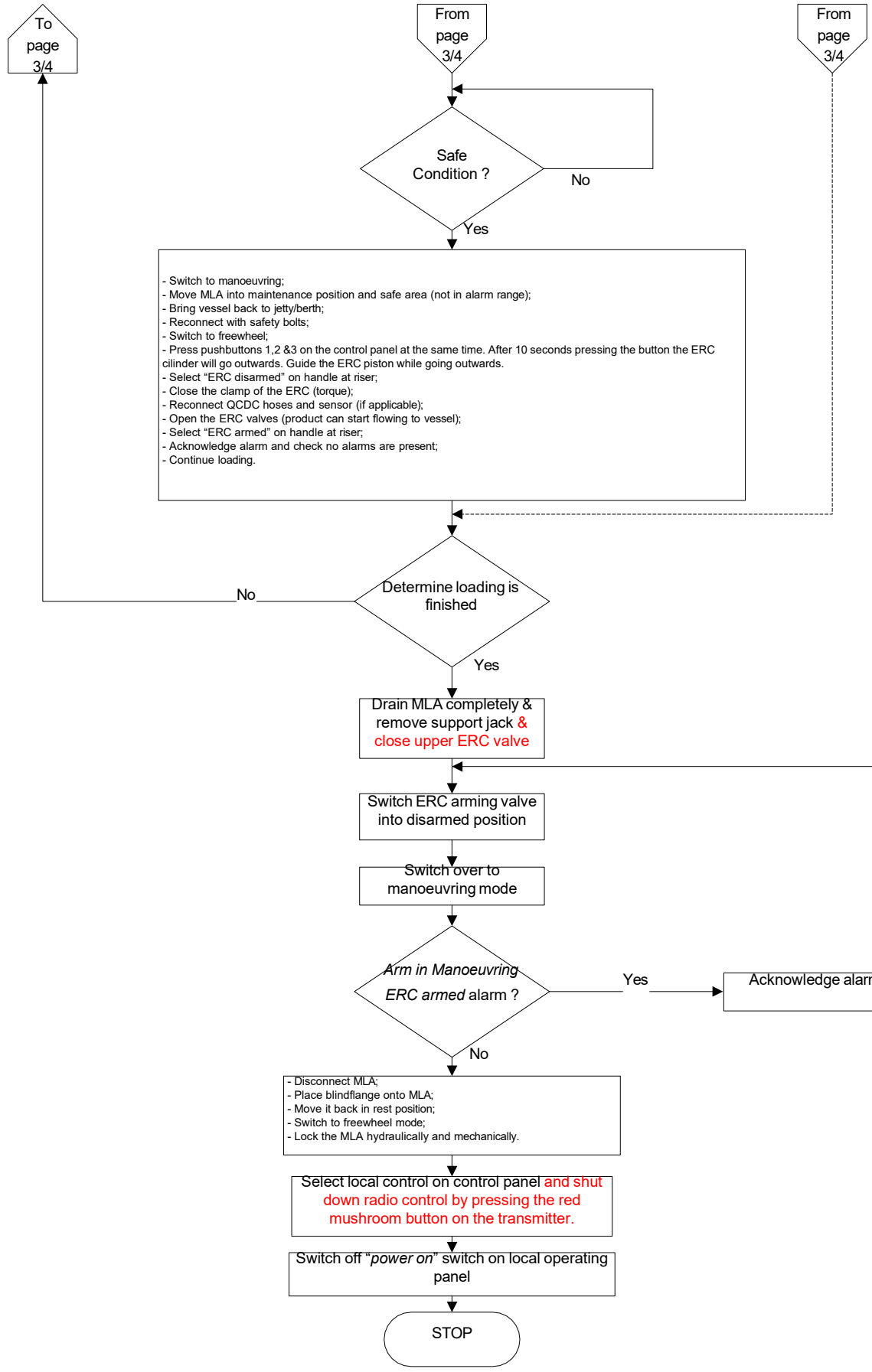

Control Panel Status at START (reference doc. P152057A91)

Layout control console with indicators and pushbuttons

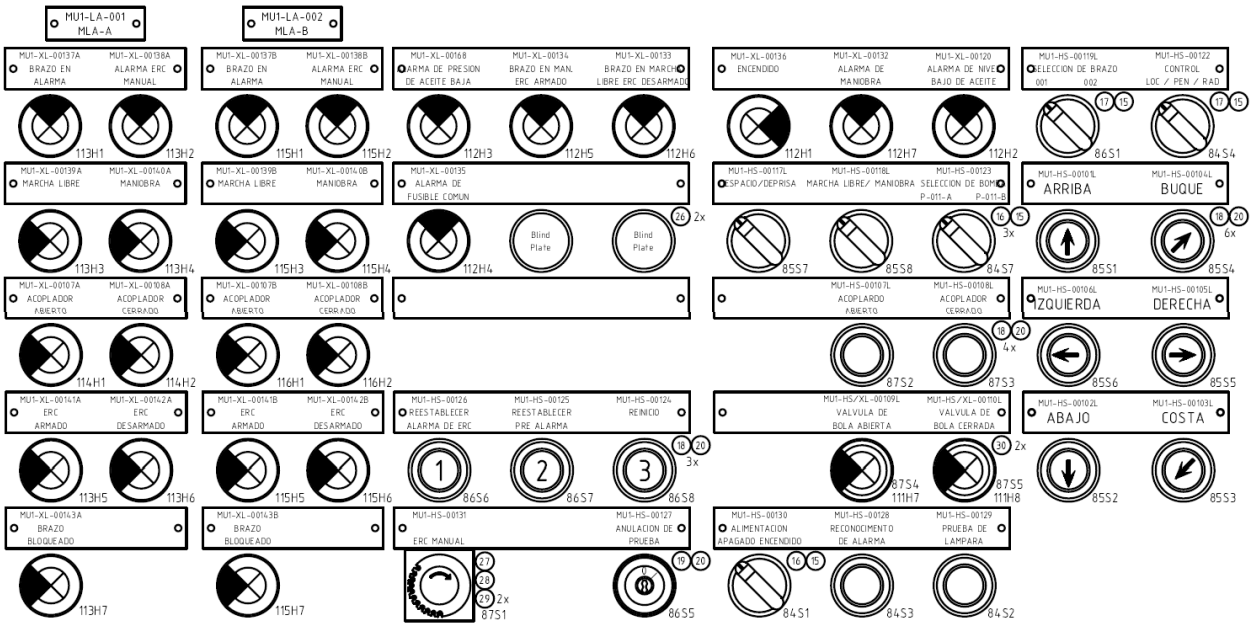

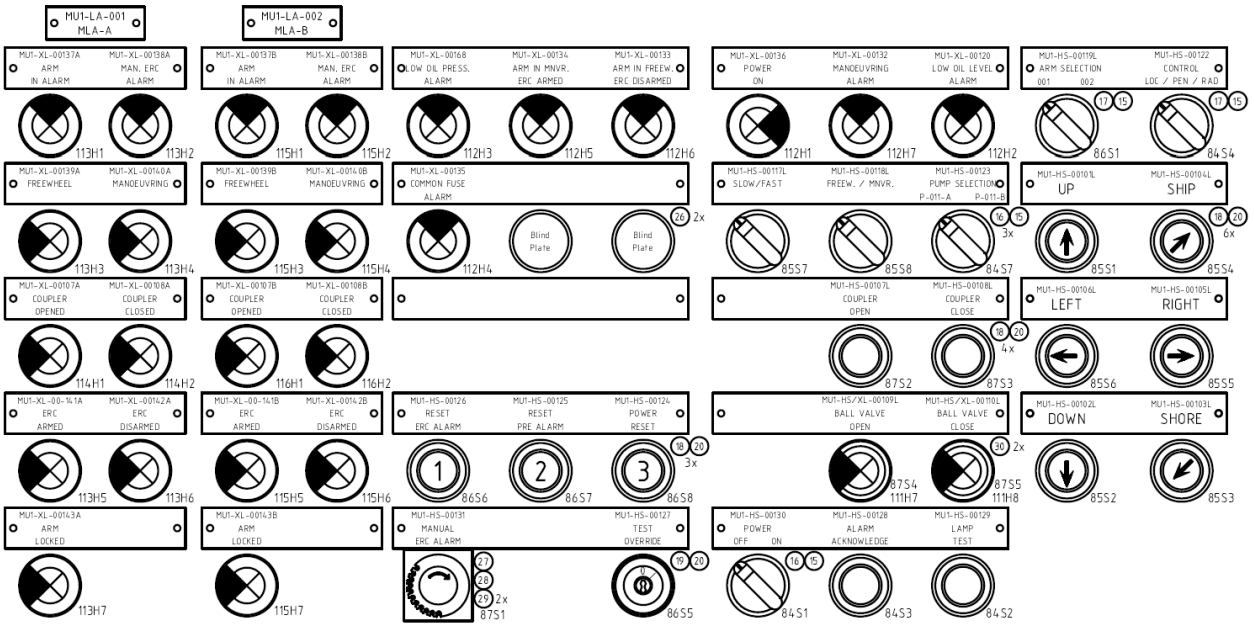

OPERATING ADVICES BEFORE START UP

Check the following items each time before operating the loading arm:

- Check if the connection clamp of the Emergency Release Coupler has been fastened properly. The test/transportation bolts have to be removed.
- Weather conditions (Windspeed max. 22 m/sec)
- Hydraulic system (Oil level, oil leakage and filter conditions etc.)
- Free space around loading arm.

STARTING LOADING ARM FROM STORED POSITION (LOCKED)

1. Switch **« *MAIN ISOLATOR* »** and « ***CONTROL VOLTAGE SWITCH*** » on.
2. Then select **« *POWER ON* »** with the selector switch on main panel.

   PLC starts up.

   Horn will activate (PLC test of alarm warnings)
   a. NO: Check control system power supply
   b. YES: Proceed further
3. Acknowledge alarm by pressing the **« *ALARM ACKNOWLEDGE* »** push button on control panel.

   Horn is de-activated (this button will silence the horn without resetting any alarms, if any is present, it will remain active)
   a. NO: Check control system
   b. YES: Proceed further
4. **« *RESET ERC ALARM* »** and **« *RESET PRE-ALARM* »** by pressing corresponding push buttons (in this order) on control panel.

   Beacon will be de-activated (the PLC is checking for possible short circuit in the alarm sensor system or malfunctioning of one of them)
   a. NO: Check sensor's are functioning properly and if they are connected.
   b. YES: Proceed further
5. **« *RESET POWER* »** by pressing the corresponding push button on control panel:

   POWER indicating lamp will lit :
   (The system checks oil level in hydraulic tank, oil pressure in accumulator as well as ERS solenoids fuses validity):

   # In case the oil level is below the minimum acceptable, pump will not be able to start.
   Low oil level alarm will raise → **Potential free contact: "Common alarm"**
   Acknowledge alarm / switch off system and correct oil level.

In case the accumulator pressure is below minimum acceptable, pump will start automatically to try and raise pressure to an acceptable level again. If acceptable pressure is not reached after 15 sec, this means that either the pump is not working properly, or there is a leakage in the hydraulic system. It easy to notice/hear the switching of the motor starter relay and the running of the motor/pump.
Low oil pressure alarm will raise → **Potential free contact: "Common alarm"**
Acknowledge alarm / switch off system and check accumulator and its hydraulic pressure line.

The hydraulic system is provided with 3 safety solenoid valves to activate the ERC. All three are safeguarded with a fuse. In case one of these fuses would happen to be defect, the ERC will never release when not so required (no unwanted ERC-action possible!):
Common fuse alarm will raise → **Potential free contact: "Common alarm"**
Acknowledge alarm / switch off system and replace malfunctioning items.

6. Select the required point of arm control by positioning corresponding selector switch accordingly :
   # *LOCAL* : for a control of the arm from main panel;
   # *PENDANT* : for a wired remote control of the arm from the pendant box;
   # *RADIO* : for a wireless remote control of the arm from the radio transmitter;

7. Select the required loading arm to be manoeuvred by positioning the corresponding selector switch accordingly.

8. Select the "*manoeuvring mode*" by positioning the corresponding selector switch accordingly: **« *MANOEUVRING* »**.
   On control panel: Manoeuvring indicator lit ➔ the arm is ready to move.

9. Unlock selected loading arm as follows :
   a. Unlock the arm mechanically by manually moving the corresponding spring energised handles downwards.
   b. Unlock the arm hydraulically by manually moving the corresponding handles (that open block valves in hydraulic lines) downwards.

10. Move loading arm to the ships manifold by using the push buttons with relevant directions. Selected hydraulic pump (inside hydraulic power pack) will start automatically. (The pump selector switch is situated on jetty head console). The pump will run 10 seconds any time after a manoeuvring button has been released.

11. Once the arm is close to the ship's manifold, use the hydraulic/ manual coupler to connect the arm to the ship. Keep push button « ***COUPLER CLOSE*** » pressed until corresponding indicating lamp on the control panel lit.

12. Switch to **« *FREEWHEEL* »** mode by positioning the corresponding selector switch accordingly. (the freewheel mode enables the loading arm to follow all ship's movements without any resistance from the hydraulic e.g. oil can move freely within the cylinders).
    The "*Freewheel*" indicator will lit on the control panel

    In case operator forgets to switch to freewheel mode :
    "Manoeuvring alarm" will raise after 5 minutes. ➔ Switch to freewheel and acknowledge alarm. From this moment on, if arm remains in freewheel mode, QCDC remains closed and is not in locked position.

13. Open upper ERC ball-valve :
    Press the button « **UPPER ERC VALVE OPEN** » on the panel.
    The upper ERC valve will open completely and corresponding indicating lamp on the control panel lit .

14. Switch ***ERC arming valve*** into **« *ARMED* »** position by moving the handle of the corresponding hydraulic valve downwards (to opened position).
    (the valve is positioned between the accumulator and the hydraulic cylinder actuating the ERC. In case it is not open, no oil pressure will reach the cylinder, consequently not activating any Emergency Release action in case necessary.)

    In case operator forgets to ARM the ERC (indicator **«ERC disarmed»** *lit on the panel):*
    “ Arm in freewheel ERC disarmed” alarm will raise.
    The indicator *“Arm in freewheel ERC disarmed”* on the panel starts flashing directly.
    After 10 minutes the Horn & Beacon will be activated. ➔ Acknowledge alarm and/ or switch the *ERC arming valve* into **« *ARMED* »** position .
    Loading arm ready for loading → **Potential free contact: “Permission to load”.**

NOTE: for starting up the (un)loading procedure is, besides the “permission to load” output, always an approval by the local operator at the MLA necessary.

NOTE: select **« local control »** with the selector switch on the control panel before turning off the radio transmitter.
In case of a spare radio: NEVER use both transmitters at the same time

LOADING CAN START

LOADING FINISHED, ARM CONNECTED TO THE SHIP

Once the loading is finalised:

1. Drain the loading arm by using the vacuum breaker valve and purge system.

2. Close upper ERC ball-valve
   Press the button « **UPPER ERC VALVE CLOSE** » on the panel.
   The upper ERC valve will close completely and corresponding indicating lamp on the control panel lit.

3. Switch loading arm to Manoeuvring mode
   Manoeuvring indicating lamp lit, the arm is ready to move.

4. Switch **ERC** into **« DISARMED »** position by moving the handle of the corresponding hydraulic valve upwards.

   In case operator forgets to DISARM the ERC :
   "Arm in Manoeuvring ERC armed" alarm will raise.
   The indicator *"Arm in manoeuvring ERC armed"* on the panel starts flashing directly.
   After 1 minute the Horn & Beacon will be activated. ➔ Acknowledge alarm and/ or switch the *ERC arming valve* into **« *DISARMED* »** position .

5. Disconnect arm from ship
   Keep push button **« *COUPLER OPEN* »** pressed until corresponding indicating lamp on the control panel lit.

6. Bring loading arm back to stored position by using the dedicated manoeuvring push buttons on the control panel, radio transmitter or pendant box.

7. Selected pump (inside hydraulic power pack) will start automatically. (The pump selector switch is situated on jetty head console). The pump will run 10 seconds any time a manoeuvring button is pushed.

8. Lock loading arm as follows :
   a. Lock the loading arm mechanically by manually moving the corresponding spring energised handles upwards.
   b. Lock the arm hydraulically by moving the corresponding handle upwards.

9. Switch system **OFF** by positioning corresponding selector accordingly

NOTE: select **« local control »** with the selector switch on the control panel before turning off the radio transmitter.

THE LOADING ARM IS STORED SAFELY

EMERGENCY SITUATION / LOADING ARM CONNECTED TO SHIP

An emergency situation can be dealt with in 2 different ways :

1. Fully automatic (the ship drifts away taking the loading arm out of its operating envelope.)

2. Partially automatic, manual ERC actuation (for example, in case of fire on the jetty, the operator must use the **« Manual ERC alarm »** push button on the Jetty Head Console)

Condition No.1

The arm is drifting out of its envelope :
(Inductive proximity switches are positioned on the loading arm to detect the start of alarm zones. This alarm will raise once the sensors detects presence of metal plates.)

Pre-alarm raising → **Potential free contact: PRE-ALARM.**
The horn will actuate the beacon will flash and the indicator on panel **« *Arm in alarm* »** will lit :

ACTIONS TO BE MADE: Shut down the loading pumps and/or close any MOV's in pipeline towards MLA with plant ESD. Try to bring back the arm in its safe operating envelope.

a. *The arm is back in a safe area:*
« *RESET PRE-ALARM* » by pressing corresponding push button on the control panel and
« *ACKNOWLEDGE ALARM* » by pressing corresponding push button on the control panel.
b. The arm keeps on drifting away and reaches the 2nd alarm area (ERC alarm, disconnection area)

ERC-alarm raising → **Potential free contact: ERC-ALARM.**
The horn changes to continuous sound to indicate a greater danger, the beacon keeps on flashing and the indicator **« ARM IN ALARM »** on the control panel will lit.
The ERC ball-valves are closing, after that the ERC clamp is releasing upper from lower part of ERC After disconnection, the loading arm will move UPWARDS (away from ship's dangerous area) automatically.

THE LOADING ARM IS STOPPED IN A SAFE AREA

EMERGENCY SITUATION / LOADING ARM CONNECTED TO THE SHIP

Condition No.2

In case of emergency, the operator can press the **« Manual ERC alarm »** mushroom button situated on control panel. The manual ERC alarm activates the ERC disconnection:

ERC-alarm raising → **Potential free contact: ERC-ALARM.**
The horn changes to continuous sound to indicate a greater danger, the beacon keeps on flashing and the indicator **« MAN ERC ALARM »** on the control panel will lit.
The ERC ball-valves are closing, after that the ERC clamp is releasing upper from lower part of ERC
After disconnection, the loading arm will move UPWARDS (away from ship's dangerous area) automatically.

THE LOADING ARM IS STOPPED IN A SAFE AREA

SAFE SITUATION, THE ARM IS STANDING STILL IN A RANDOM SAFE AREA WITHIN OPERATING ENVELOPE.

In order to re-assemble the ERC, the arm needs to be empty from product first to prevent sudden displacement from inboard content into empty outboard arm when moving inboard below horizontal position.

1. Drain loading arm if possible, in particular inboard section.

2. Switch to **« MANOEUVRING »** mode.

3. Bring the arm back to stored position and lock it mechanically and hydraulically.

4. Remove the parking lock sensor at hydraulic parking lock.

5. Reset alarms:
   A. Press **« ACKNOWLEDGE ALARM »**
   The horn will stop.
   B. **« RESET ERC-ALARM »**
   C. **« RESET PRE-ALARM »**

6. Switch to **« FREEWHEEL »** mode
   The ERC cylinder will move to its normal position.

Once the ERC cylinder is fully extended

7. Switch back to **« MANOEUVRING »** mode and bring the arm close to the ERC part that remained on the ship. Before this the ship must be brought back within the loading arm's normal operating envelope.

8. Re-assemble both ball-valves by means of the transport bolts (Temporary action).

9. Close the clamp around the valves common flanges and tighten the nut by means of a torque wrench at the moment indicated on the clamp (*for more detail see chapter ERC of the manual*).

10. Open both ERC ball-valves with an adequately sized wrench.
    This is a standard tool, no special tool.

11. Replace the parking lock sensor at hydraulic parking lock.

12. Remove the test bolts.

13. Restart loading or finish loading operation normally.

Purge and Flushing Procedure**:**

First, the background on nitrogen and natural gas: The difference in weight between nitrogen (N_2) and natural gas is significant due to their compositions .A brief comparison:

1. Molecular Weight:
   - Nitrogen (N_2)**:** The molecular weight of nitrogen is about 28 grams/mol.
   - Natural Gas**:** Natural gas mainly consists of methane (CH_4), with a molecular weight of about 16 grams/mol. Other components like ethane, propane, and butane can slightly increase the weight , but it still remains lighter than nitrogen.
2. Density:
   - Nitrogen**:** Under standard conditions (0°C and 1 atm), nitrogen has a density of about 1.25 kg/m³.
   - Natural Gas**:** The density of natural gas is around 0.7 kg/m³ under the same conditions, so it is less dense than nitrogen.
3. Summary**:**
   - Nitrogen is heavier than natural gas when comparing equal volumes at the same pressure and temperature.
   - Natural gas is lighter, which means it rises more easily and escapes if there is a leak, while nitrogen, being a heavier gas, tends to stay closer to the ground.

Therefore, natural gas needs to be purged from the highest point of the loading arm, while nitrogen should be introduced at the lowest point. The nitrogen will push the natural gas out.

Procedure:

1. Close Main valve at Jetty and Ship**.**

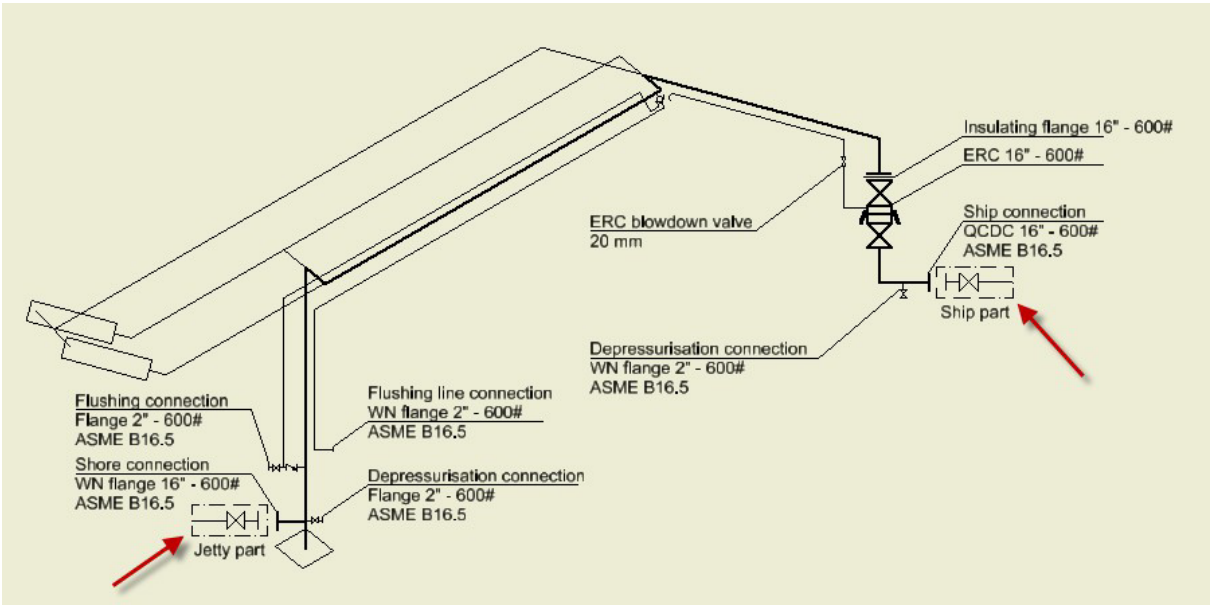

1.

2. Open decompression valve and lower the pressure as much as possible (max. 1.3 bar)**.**

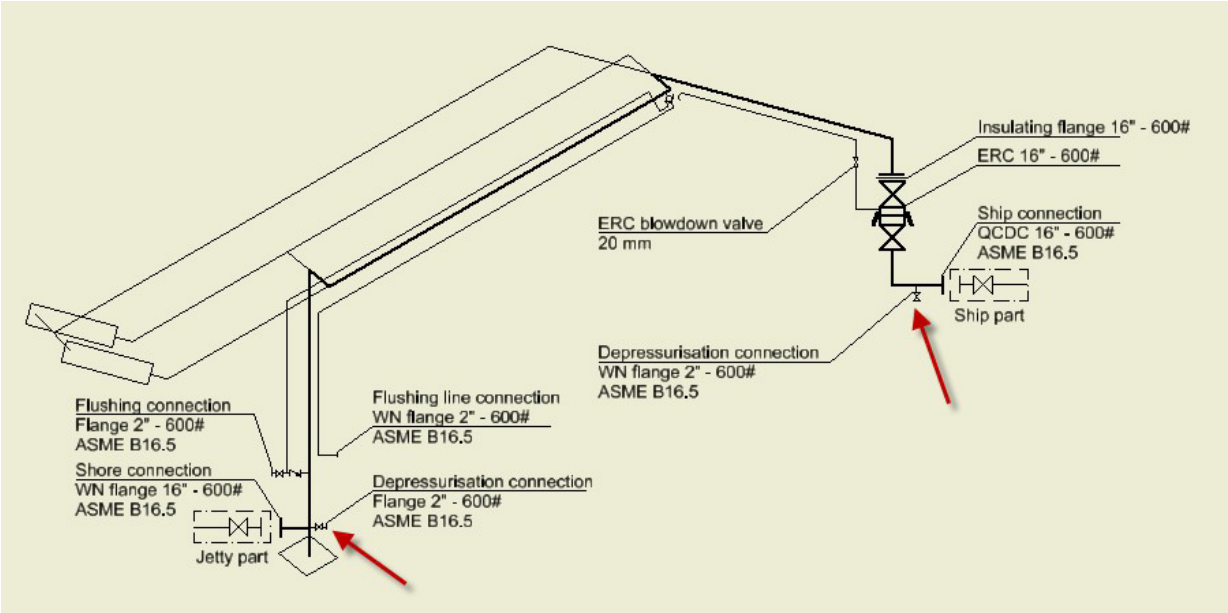

3. Open N2 vent valve, pilot line opens non return valve at top of riser**.**

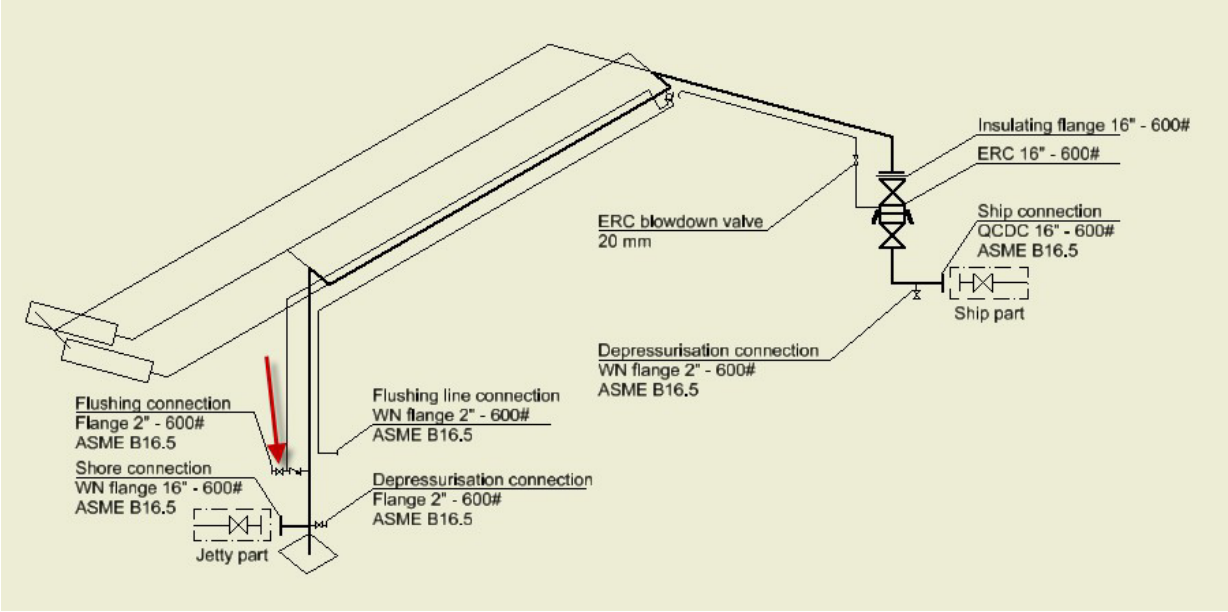

1. N2 pressure on the pilot line opens the valve at the top of the loading arm.

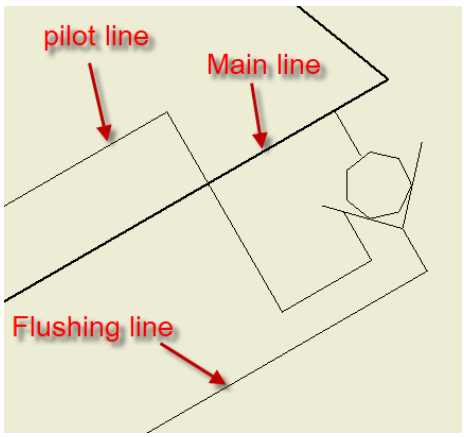

2. The natural gas will be forced out of the loading arm by the N2 and should be directed through the flushing line to a safe location.

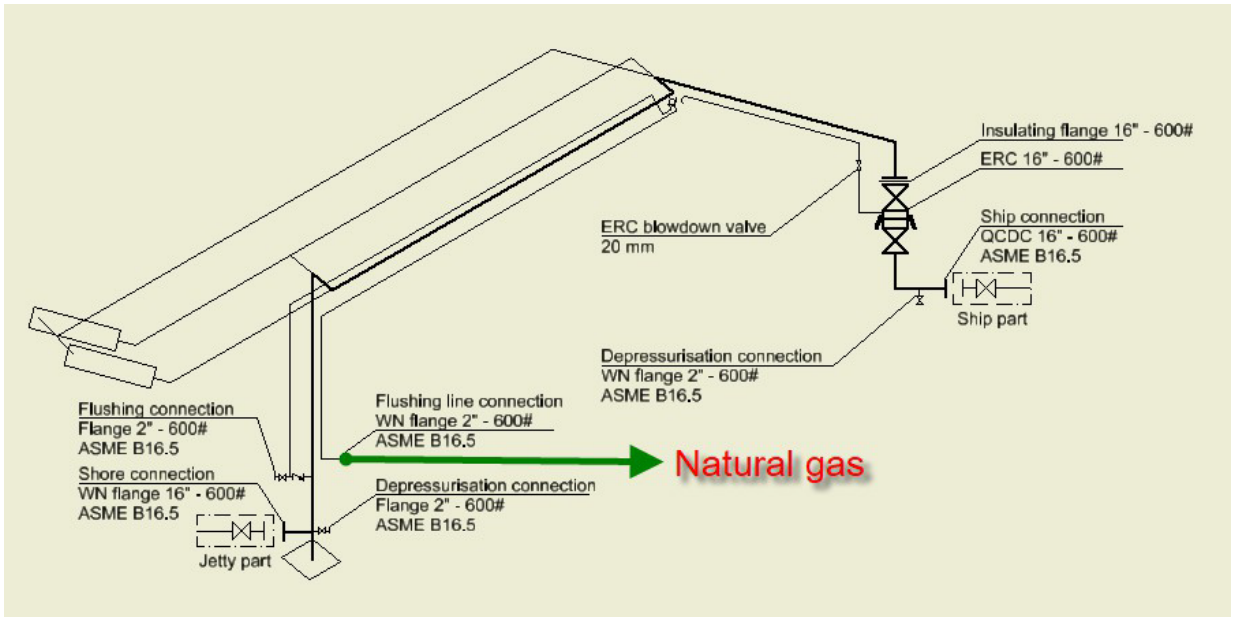

3. Once the riser and inboard arm are completely flushed, the heavier nitrogen gas will flow over the highest point of the loading arm and move down towards the triple. From there, it will push the natural gas from the lowest point of the outboard and triple sections upwards to the highest point, where it will be removed through the flushing line.

4. Flushing can be stopped once only nitrogen, and no natural gas, is flowing out of the flushing line.

5. Flush with air in case of maintenance.

KANON

LOADING EQUIPMENT

Installation, Operating and Maintenance manual

Section 4

Quick Connect Dis-connect Coupler

Installation, Operating and Maintenance Manual
Hydraulically Operated CNG QCDC

(KANON Instruction : 014-999-003-00)

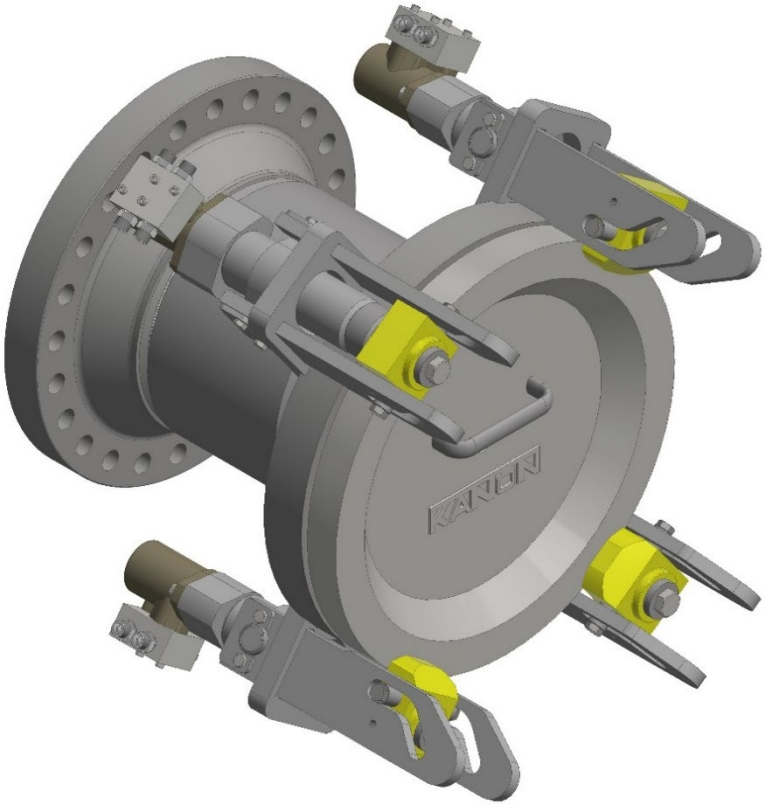

Table of Contents

1.0 Description 3
2.0 Safety Instructions 4
3.0 Operating procedures 6
4.0 Trouble shooting 7
5.0 Emergency disconnection 9
6.0 Inspection and maintenance 10
7.0 The face seal and requirements manifold flange 12
8.0 Spare parts 13

1.0 Description

The Quick Connect / Disconnect Coupler (QCDC) is situated at the triple assembly of the loading arm and provides an easy and safe connection..

The QCDC is equipped with 4 connecting claws. The flange has a raised face, and for a tight connection between the raised faces of the QCDC flange and the raised face of the ship a spiral wound gasket is to be used.

Before connecting the loading arm to the ship an inspection of the connecting flange of the ship is mandatory. When there is any doubt about the quality of the flanges contact the Kanon Loading Equipment Service department at +31 36 52 19 777.

2.0 Safety Instructions

The QCDC has been designed to ensure safe operation when used for the purpose, and in the manner it is intended.

2.1 The hydraulic system scheme and data QCDC

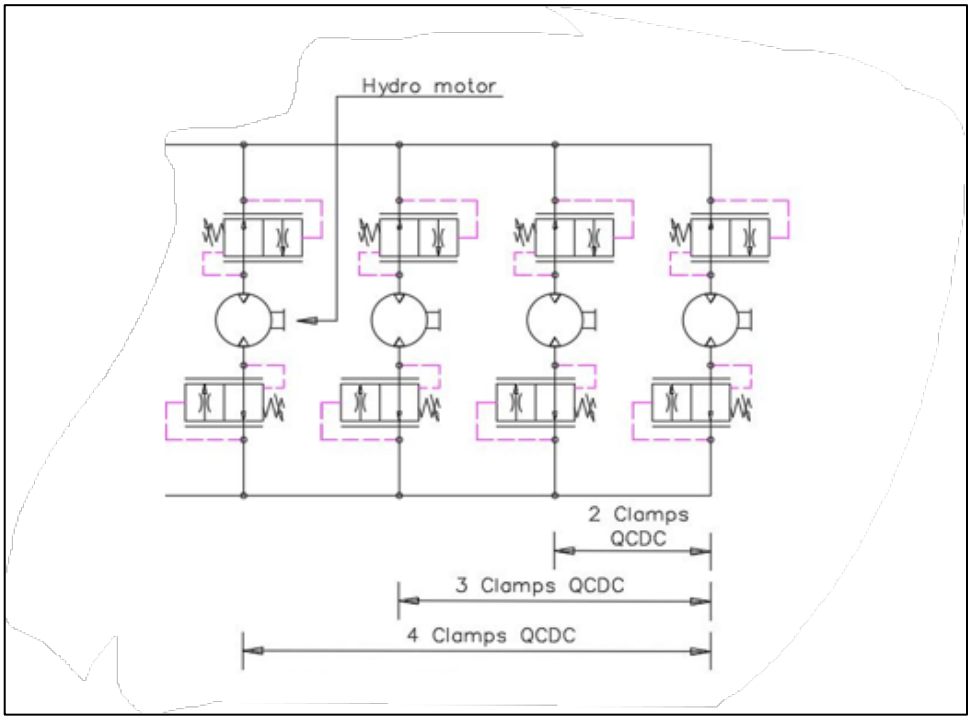

Hydraulic scheme

Nominal working pressure	140 barg
Minimum oil flow rate for QCDC	20 litres / min.

Hydraulic data

2.2 General safety instructions

- The installed equipment has to be inspected and approved by a qualified supervisor.
- The installed equipment has to be operated and maintained according to the instructions in this IOM.
- The end user will establish safe working procedures for the equipment.

2.3 Safety instructions during operation

- Only qualified personnel may operate the installation.

WARNING; when the QCDC is operated, ensure clothing, hands and fingers are kept well clear off the operating mechanism and moving parts particularly the clamps, hinges and slots.

WARNING; Never stand in front of the QCDC when removing the blanking plate.

2.4 Safety instructions concerning the blanking plate

- The aluminium blanking plate is not pressure rated! (see figure below)
- Never use this blanking plate for testing of pressure built up in the MLA.
- The blanking plate is provided with a hole. Do not plug it !
- Always fit the blanking plate to the QCDC when it is not in use.
- The face seals will degrade if exposed to natural light for longer periods.

3.0 Operating procedures

3.1 Connecting the QCDC

- Manoeuvre the MLA until the QCDC is close to the tanker manifold.
- To check no product is left in the MLA, follow the draining procedure.
- Hydraulicly operated clamps can be opened by pushing the button " coupler open".
- Remove the blanking plate.
- Place the first two bolts as indicated in the image below.

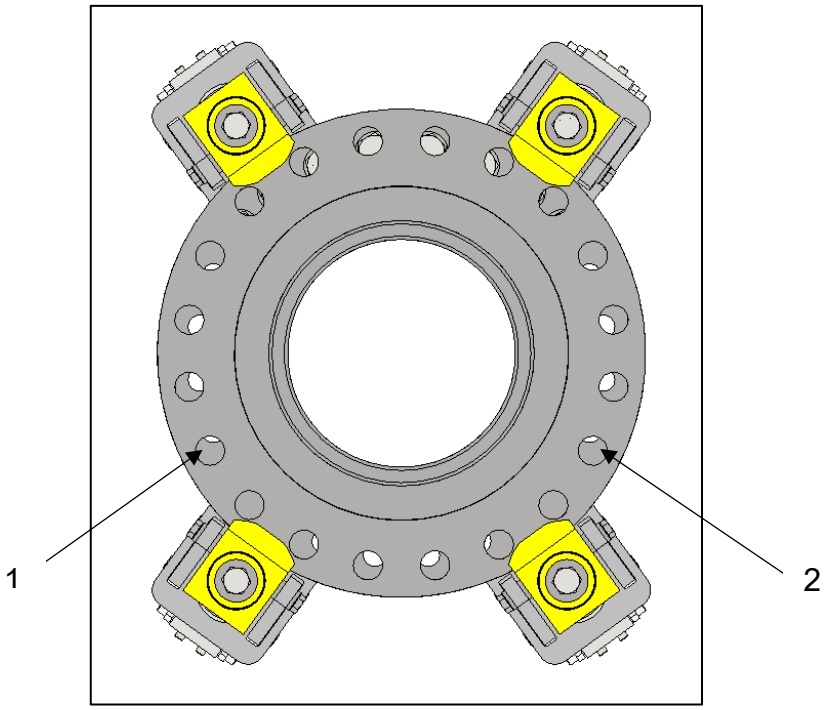

- Check the face for damages and other irregularities. It may be necessary to clean it (ensure the cleaning liquid will not damage the face)
- Place the spiral wound seal so it's resting on the 2 bolts.
- Place the other bolts and tighten all the bolts at 1200 Nm (see doc. 000-000-002-00) .
- Ensure there are no obstructions to the movement and the seating of the clamps behind the tanker manifold flange.

NOTE; To prevent damage to the tanker manifold flange and the QCDC ensure that the claws are fully open when connecting or disconnecting the MLA. When connecting, the claws need to grasp <u>at the rear</u> of the tanker manifold flange!

- Adjust the support jack on the back of the triple correctly to avoid a load on the tanker manifold.
- Select the freewheel position of the Marine Loading Arm on the control panel.

3.2 Disconnecting the QCDC

- Before disconnecting check there is no product left in the MLA.
- Select the manoeuvring mode on the control panel.
- Adjust the support jacks on the back of the triple so it is clear of the deck.
- Remove the bolts from the flanges.
- Open the QCDC
- Move the QCDC away from the flange
- Position the blanking plate to the raised face flange and close the claws.
- Manoeuvre the MLA to its stored position.

4.0 Trouble shooting

4.1 If the claws will not close.

Ensure:

- Do not use any other means to force the clamping units to close.
- The tanker manifold flange is not damaged.
- The tanker manifold flange is free from obstructions.
- The tanker manifold flange has the same diameter and rating as the QCDC.
- The claws of the clamping unit have no contact with the outside diameter of the tanker manifold flange.
- The hydraulic power pack output pressure and the oil flow rate are according to the table at the ‘Installation, Operating and Maintenance manual Hydraulic operated QCDC‘ section 2.1
- The return line filter of the hydraulic power pack is not blocked.
- There are no leaks or damages to the hydraulic piping or the flexible hoses.
- The travel slots are free from dirt and damage.
- The claws are completely open.

NOTE; If the QCDC still will not close, a skilled technician should do a full system check.

4.2 If during the (un)loading operation product leaks

Ensure:

- The QCDC has been correctly connected by checking the torque on all bolts.
- The tanker manifold flange has the same diameter and rating as the QCDC flange.
- The seal is free of incisions and other irregularities.
- The raised faces of the connecting flanges are free from incisions and other irregularities.

4.3 If the QCDC claws will not open

Ensure:

- Do not use any other means to force the clamping units to open.

- The hydraulic power pack output pressure and the oil flow rate are according to the table at the ‘Installation, Operating and Maintenance manual Hydraulic operated QCDC‘ section 2.1.
- The return line filter of the hydraulic power pack is not blocked.
- There are no leaks or damages to the hydraulic piping or the flexible hoses.
- The travel slots are free from dirt and damage.

NOTE; If the clamping units still will not open, a skilled technician should do a full system check.

4.4 Other failures

If needed consult the Kanon Loading Equipment Service Department at +31 36 52 19 777.

5.0 Emergency disconnection

In the event of a failure of the clamping units or the hydraulic system the Marine Loading Arm can still be connected to the tanker manifold flange. Disconnection from the tanker manifold flange can take place in two different ways.

5.1 Emergency disconnecting

- Loosen all the bolts.

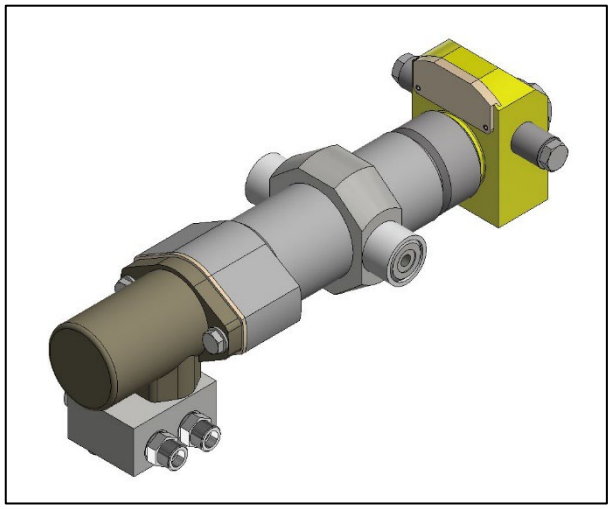

NOTE; When reassembling the claw upon the plunger, be sure the internal sleeve connection fits properly. The plunger must be at least 10 mm in out position.

6.0 Inspection and maintenance

The aim is to maintain the QCDC in an efficient working condition by regular routine inspections and maintenance. Only the appropriate hydraulic fluids and lubricants should be used. For this see Manufacturing Data Record (MDR) section 7 QCDC MDR drawing P_A50).When equipment has to be repaired, only original Kanon Loading Equipment spare parts should be used.

6.1 Guide for scheduled inspections

6.1.1 Before each operation

- Ensure the face seal is replaced by a new one after every operation.

6.1.2 Monthly

- Open and close the clamp units of the QCDC fully, even when the QCDC is not in use.
- This is to spread the internal lubrications and for the internal seals.
- Ensure all bushes and fasteners are tied.
- Check moving parts for mechanical damage.
- Grease the guidance slots with Kroon LITHEP Grease EP2 grease.
- Ensure there are no leaks or damages in the hydraulic pipe work, fittings and flexible hoses.

6.1.4 Annualy.

- Check the surface preparation.

6.2 Major overhaul

The QCDC has been designed to operate in a hostile environment for a long time if inspected and properly maintained.

Kanon Loading Equipment can provide technicians to carry out the necessary inspections and repairs. A report of the condition of the QCDC will be made.

Alternatively, the QCDC can be returned to Kanon Loading Equipment for a full refurbishment and testing prior to being returned to site.

De-aeration of the hydraulic system is needed after overhauling or repairs.

De-aeration nipple

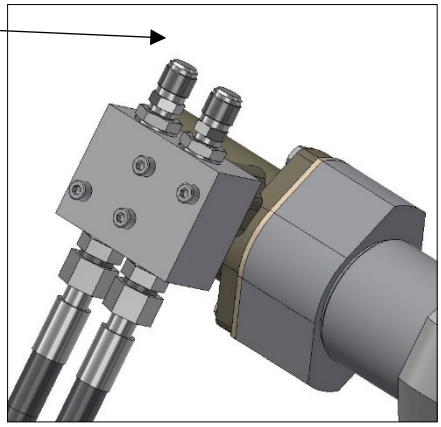

When there is air in the claws :

- The de-aeration nipples (see figure above) to connect with a special de-aeration hose.
- Create an oil flow by moving the claws until all the air is out.
- Remove the special de-aeration hose.

The synchronisation of the claws may temporary be disturbed until the QCDC is fully opened and closed a few times.

NOTE; The adjustments of the compensated flow regulators is preset and may not be altered by users!

7.0 The face seal and finishing of the manifold flange.

The flanges are to be free of any damages to provide the best seal possible.

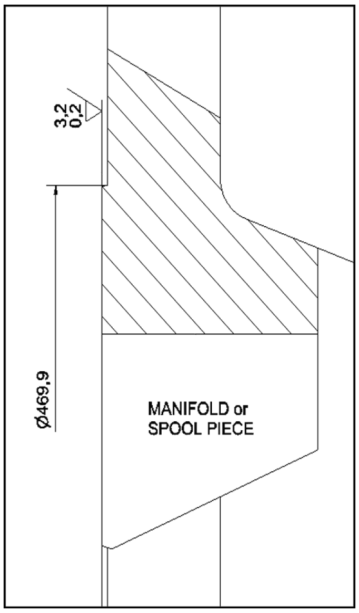

Ra=3.2 to 6.3 µm at the entire sealing area

Preferably 0.2 µm in order to lengthen seal's life time

NOTE; Be sure the surface roughness (Ra) of the manifold or spool piece flange face meets the requirements as indicated.

8.0 Spare parts

The following spare parts list is applicable for: Hydraulically operated CNG QCDC.

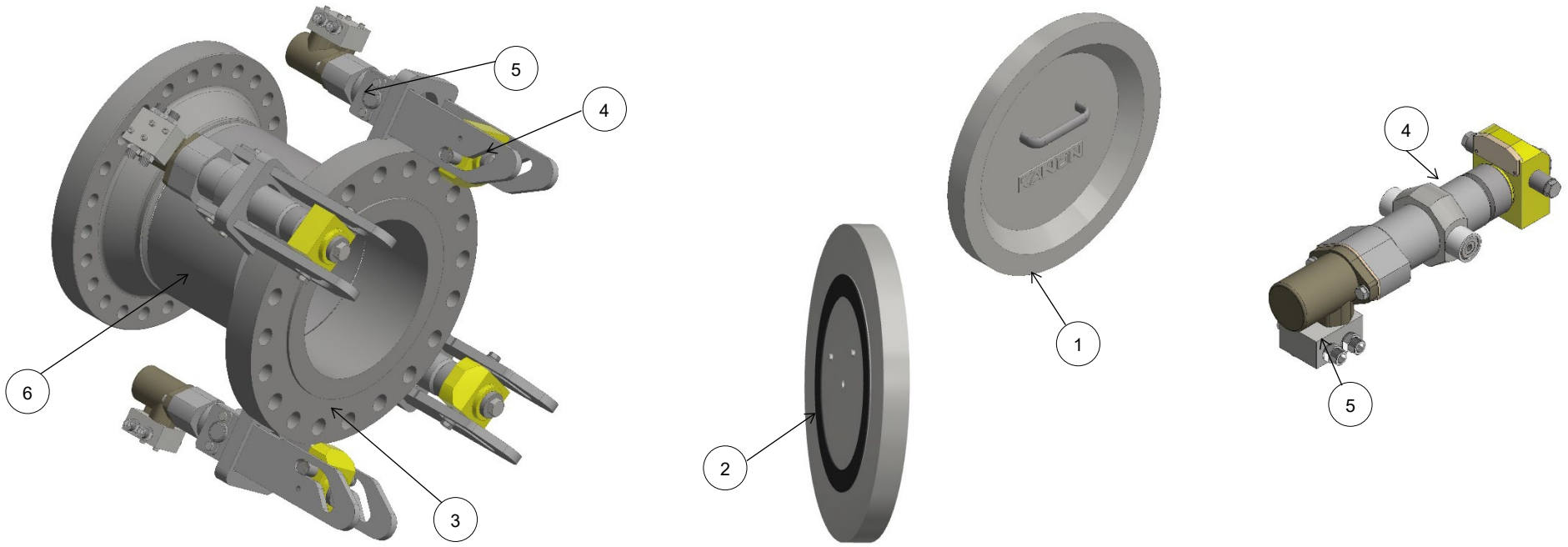

QCDC nr.	Description	Material	Blanking Plate (1)		Rubber seal (2)		Spiral wound gasket (3)		Clamp unit (4)		Manifold flow control valve (5)		Flanged tube (6)	
46992029	Hydraulic QCDC 16" 600# W.N.	A106 GrB	1x	46992153	1x	46992152	2x	96151890	4x	46992030	4x	46991004	1x	46992149

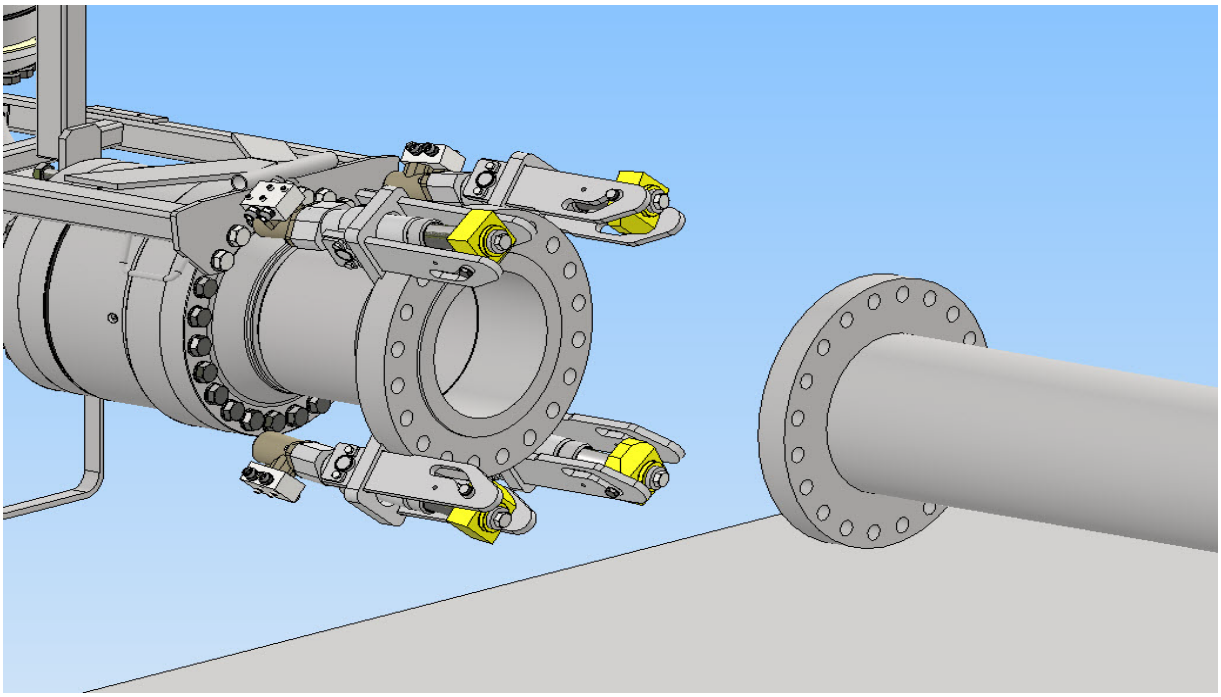

Check both flanges for contamination and damage and ensure that the immediate area is free of obstacles that could prevent the QCDC from connecting..
Open the claws on the control unit.

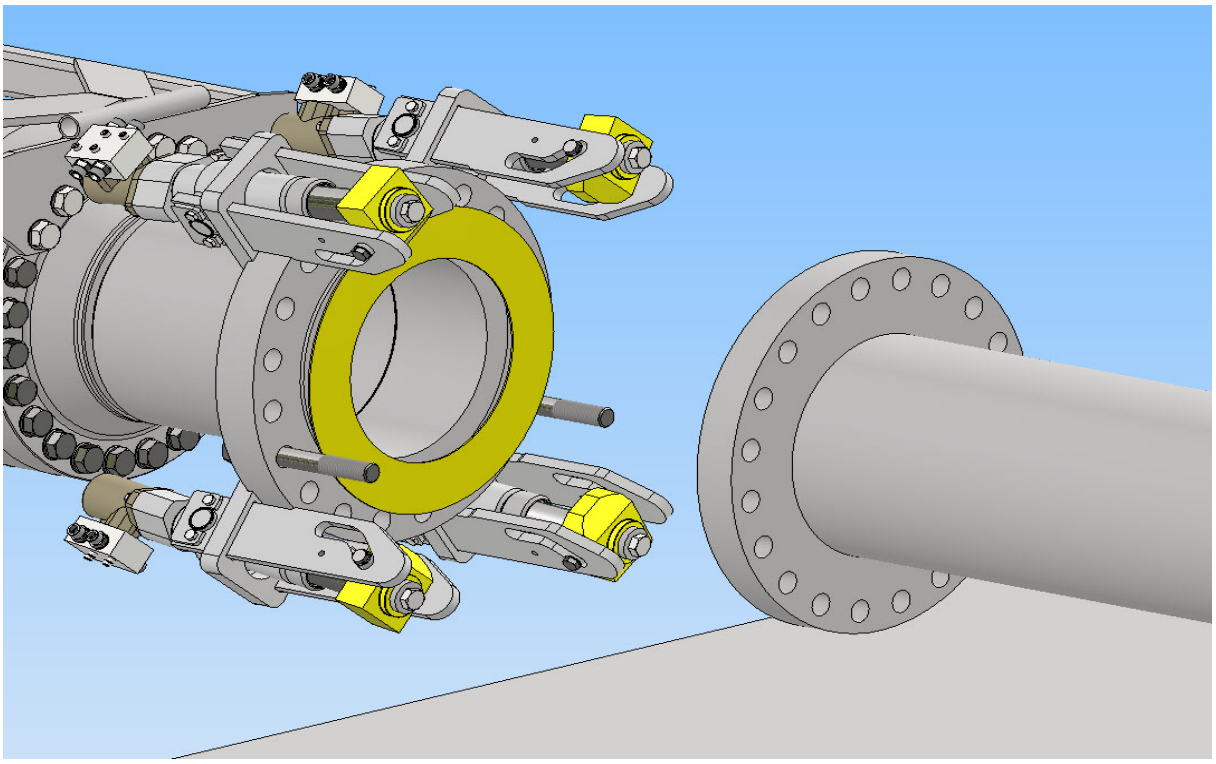

Direct the MLA to the ship's flange, install 2 bolts as shown and fit the new gasket.

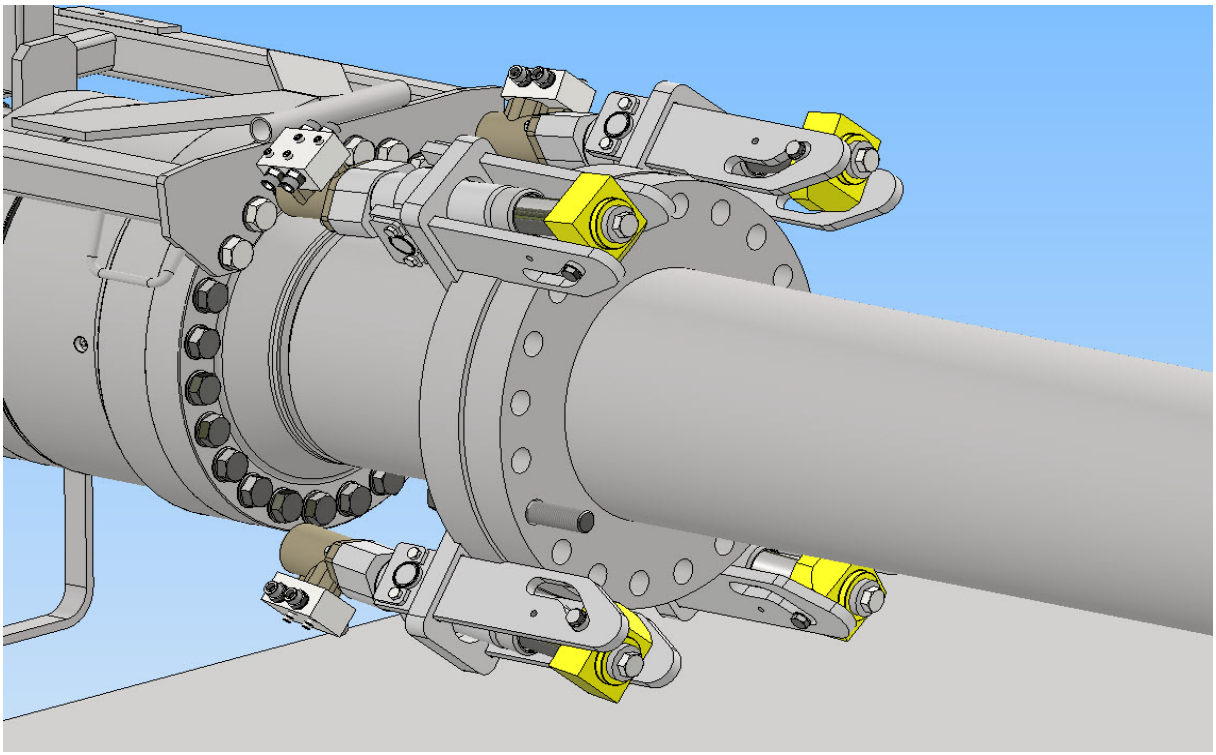

Connect the flanges together and allow the claws to close.

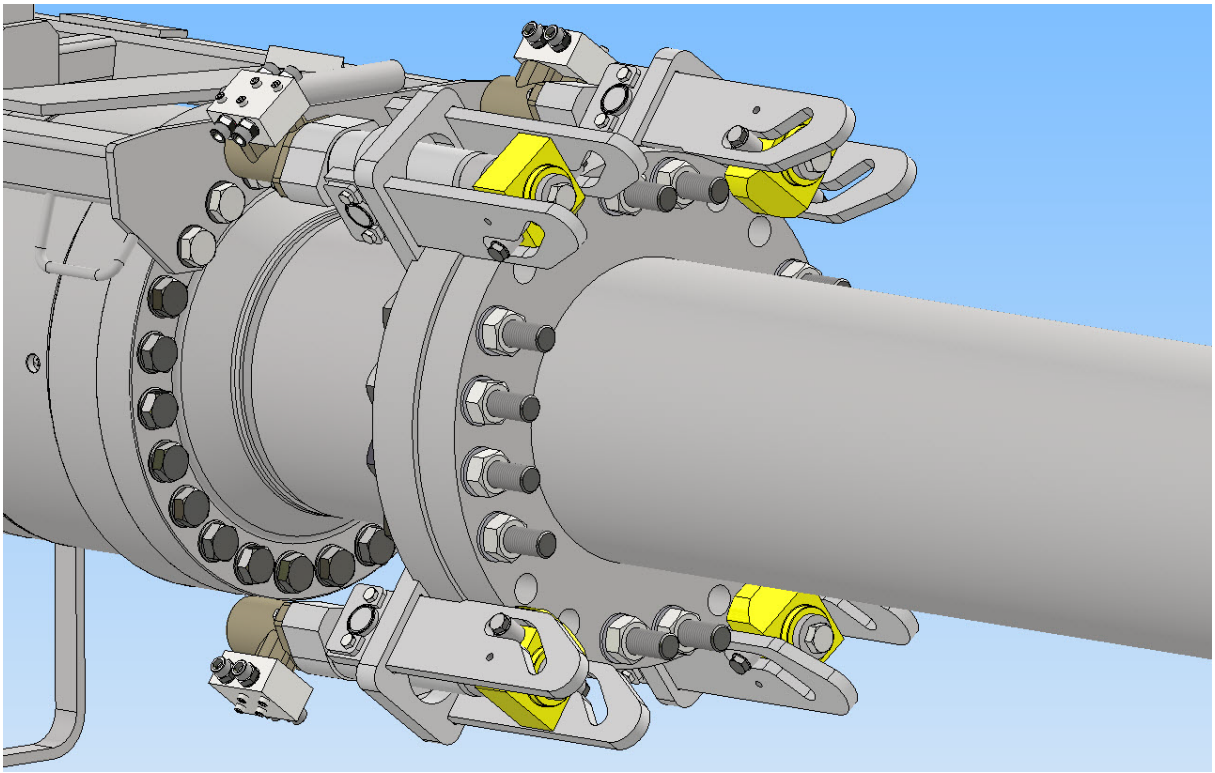

The bolts can be placed (where possible) and tightened

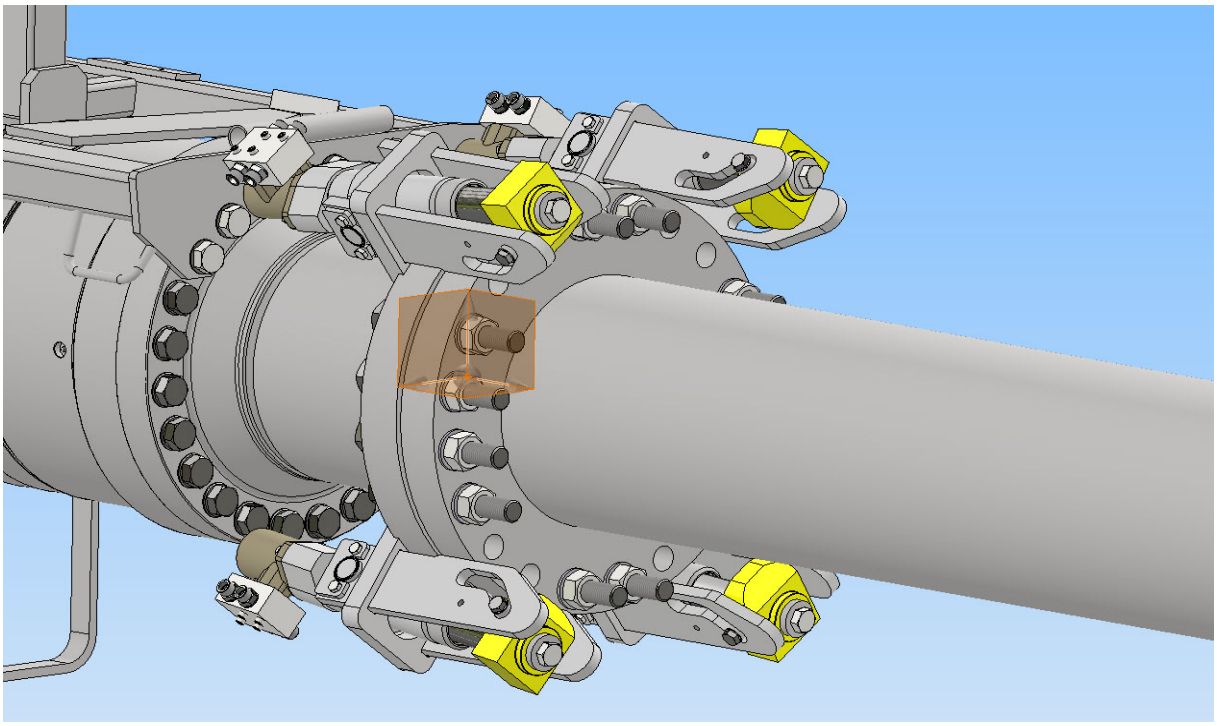

Open the claws on the control unit and install the remaining bolts and nuts.

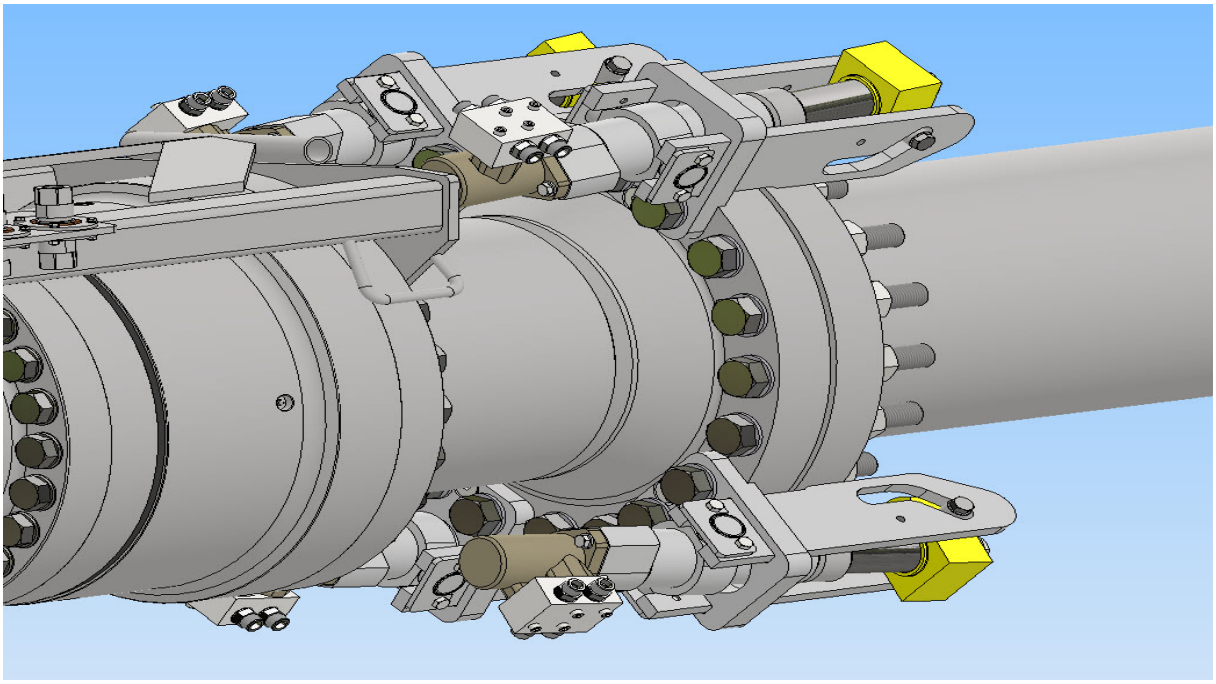

Tighten the nuts and bolts in the prescribed steps and sequence to 1200 Nm. See section 2, instruction 000-000-002-00, "General requirements for tightening nuts and bolts.".

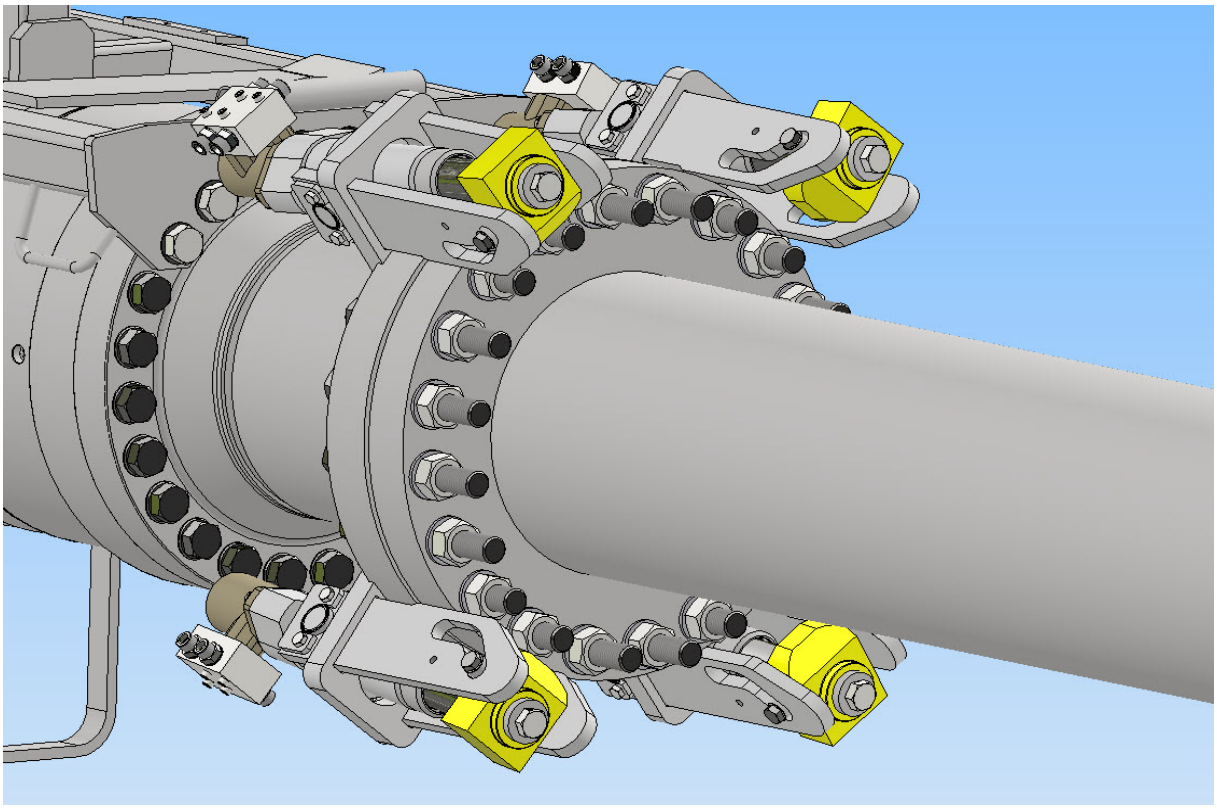

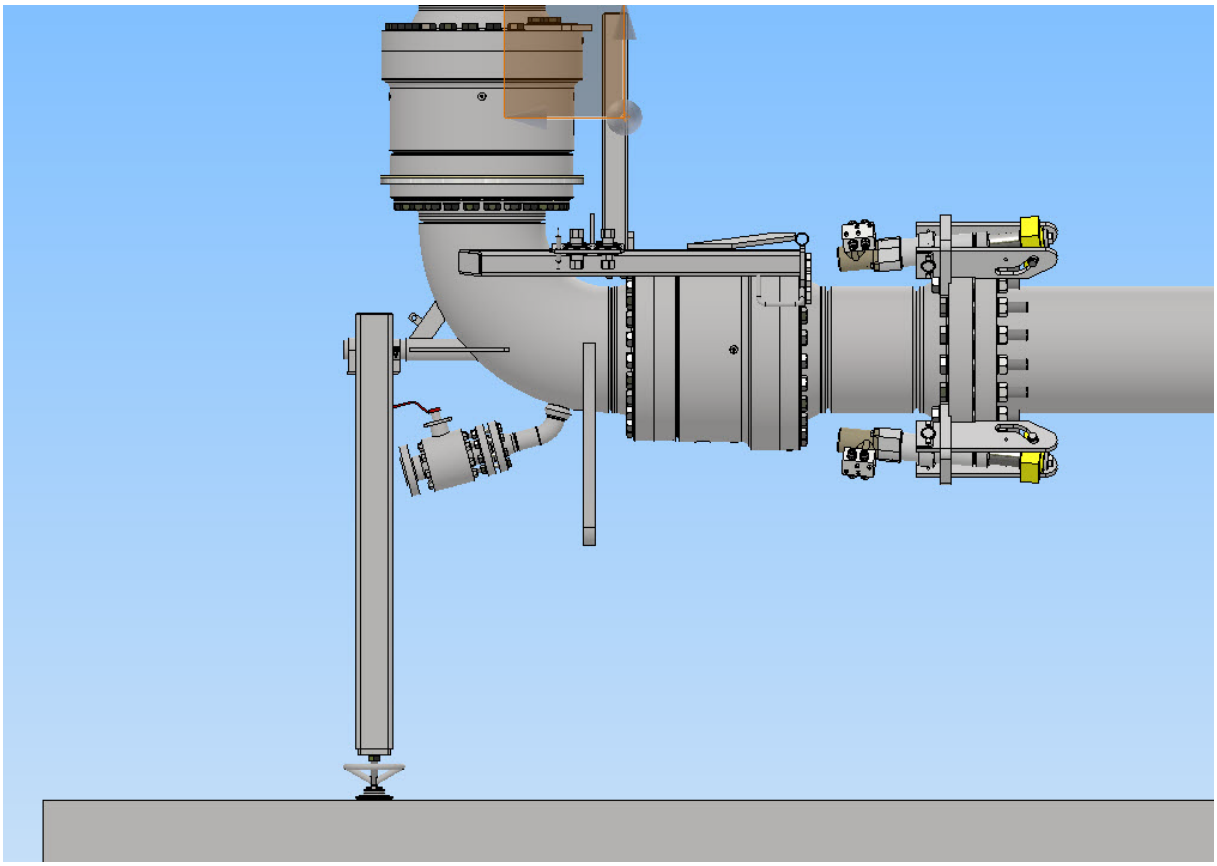

Install the support leg. See section 3, instruction 002-003-015-00, "Support Legs."

KANON

LOADING EQUIPMENT

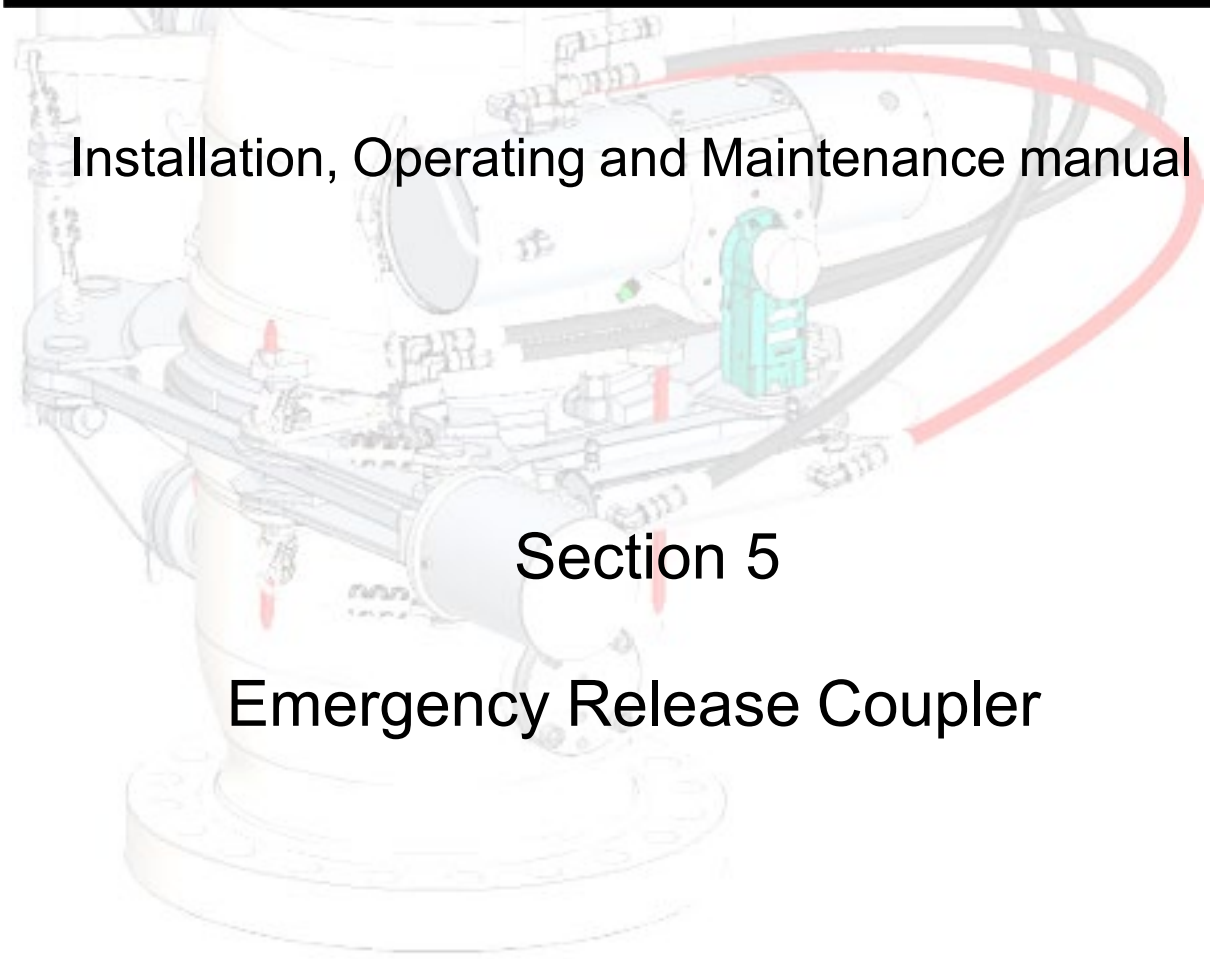

Installation, Operating and Maintenance manual

Section 5

Emergency Release Coupler

ORIGINAL INSTRUCTIONS

MIB 16” RB 12” ERS
HPNG Ain Sokhna Port

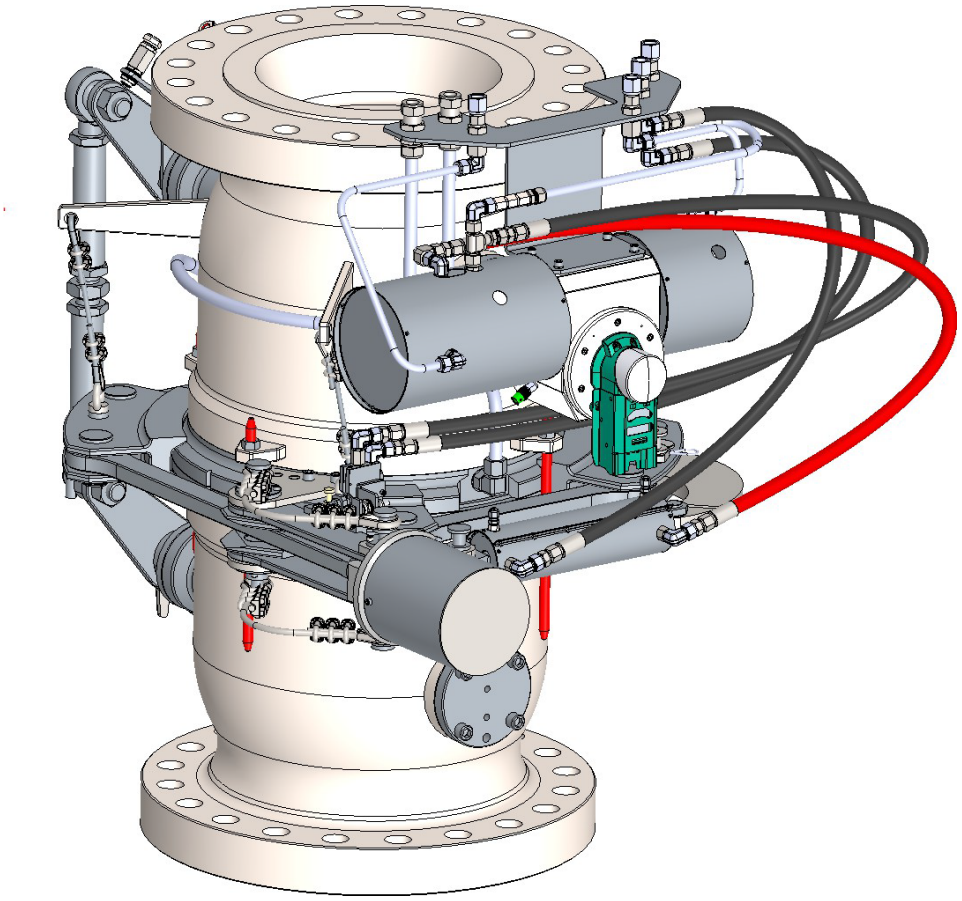

OPERATING AND MAINTENANCE MANUAL

PROJECT REF	**HPNG Ain Sokhna Port**
DOC. No.	**OMM36767**
REV.	**0**
MIB PROJECT REF. No	**2024-ON497 / 36767**
CUSTOMER	**KANON LOADING EQUIPMENT B.V.**

DRAWINGS:	**DV6100/02**	DBV/ERC 16” RB 12” ASME B16.5 CL.600
	EV3760/02	ERC FOR 12” ERS ASME B16.5 CL.600
	HC36767	HYDRAULIC CIRCUIT

Rev.	Date	Issued	Checked	Approved	Description
0	11/04/2025	MAB	MZ	RK	FIRST ISSUE

Issued By:	Checked by:	Approved by:
Name: M. Borgato	Name: M. Zimmitti	Name: R. Kröss
Date: 04/04/2025	Date: 10/04/2025	Date: 11/04/2025

INTRODUCTION

This user manual is designed to provide enough information to safely operate MIB 16” RB 12” ERS for HPNG Ain Sokhna Port.

This manual does not replace any safety procedure according to the system Owner/Operator standards and applicable law and rules (work permits, lockout/tagout procedures and other applicable if any).

Technical information contained in this manual are intended to be checked and integrated in appropriate safety procedures: the owner/operator is the sole responsible for risk evaluation in operating and servicing below described machinery and systems.

This manual is divided into sections, as listed in the Table of Contents. The sections are arranged to instruct the user of the equipment with the design parameters, functional operations, and the basic maintenance requirements.

The equipment supplied by MIB has been designed and manufactured to ensure safe operation when used for the purpose, and in the manner, for which it is intended.

To ensure safety during operation, these instructions must be read by those who will operate and maintain the equipment.

The specified design loads and pressure given in Table 1 should not be exceeded.

Good maintenance practice must be followed at all times, and only the appropriate hydraulic fluids and lubricants must be used.

When equipment is repaired, only original MIB spare parts should be used. These must be correctly fitted following the instructions provided by MIB, and the equipment tested before being returned to normal operation.

Advice on the correct use and operation of the equipment supplied is given in this manual. Should any further assistance be required, this is readily available from our technical departments.

MIB are able to assist with the installation and commissioning of this equipment before it goes into service and also provide services to meet the project maintenance requirements during the life of the equipment. Please do not hesitate to consult us.

MIB Italiana S.P.A.
Via Garibaldi 6
35020 Casalserugo
Padova
ITALY

TEL +39(049) 8741272
FAX +39(049) 643834
E-MAIL aftersales@mibitaliana.it

CONTENTS

1. HEALTH AND SAFETY INSTRUCTIONS 6
1.1. SYMBOLS 6
1.2. GENERAL 7
1.3. SAFETY DATA 9
1.4. SAFETY PRIOR TO AND DURING OPERATION 11
1.5. SAFETY DURING MAINTENANCE 12
1.6. PPE FOR THE MAINTENANCE TECHNICIAN 13
2. WARRANTY 15
3. REPLACEMENT PARTS 17
4. PRESERVATION, PACKING, HANDLING & STORAGE 19
5. DESCRIPTION OF EQUIPMENT 22
6. INSTALLATION 28
7. OPERATING INSTRUCTIONS 31
7.1. BEFORE STARTING WITH PRODUCT TRANSFER 31
7.2. AFTER COMPLETION OF PRODUCT TRANSFER 33
7.3. RE-ASSEMBLY AFTER EMERGENCY DISCONNECTION 34
7.4. ROUTINE TEST 38
8. MAINTENANCE & INSPECTION 42
8.1. GENERAL 42
8.2. FULL TEST RELEASE 44
8.3. INSPECTION OF ERC 45
8.4. TESTING OF BALL VALVES 45
8.5. GOOD PRACTICE 46
8.6. MAJOR OVERHAUL 46
9. COMPONENT SERVICING 48
9.1. FACE SEAL 48
9.2. AIR BLEED PROCEDURE 49
9.3. RECOMMENDED SPARE PARTS 50
Table 1 - SPARE PARTS LIST 50
Table 2 - TECHNICAL DATA SHEET 51
Table 3 - INTERFACE STUD BOLTS TORQUE 51
ANNEX A - ERS GA DRAWING AND BOMs 52
ANNEX B – HYDRAUILIC CIRCUIT 60

HEALTH AND SAFETY INSTRUCTIONS 1

WARRANTY 2

REPLACEMENT PARTS 3

PRESERVATION, PACKING, HANDLING & STORAGE 4

DESCRIPTION OF EQUIPMENT 5

INSTALLATION 6

OPERATING INSTRUCTIONS 7

MAINTENANCE & INSPECTIONS 8

COMPONENT SERVICING FOR ERS 9

1. HEALTH AND SAFETY INSTRUCTIONS

1.1. SYMBOLS

The symbols shown in the table below are used in the manual to draw the lector's attention and highlight some important aspect.

SYMBOL	MEANING	NOTES
	DANGER	Indicates a hazard with risk of injury, even death, for the user. Pay close attention to text blocks indicated by this symbol.
	CAUTION	A warning of possible deterioration or damage to the system and / or equipment. Pay attention to the texts indicated by this symbol.
	WARNING NOTE	Indicates a warning or note of key functions or useful information. Pay attention to the texts indicated by this symbol
	ADDITIONAL INFORMATION	Blocks of text that contain additional information are introduced by this symbol. This information does not have direct relation with the description of a function or with the development of a procedure. It can be cross-references to other documents, such as instruction manuals for use attachments, technical documents or other sections of this manual.

1.2. GENERAL

All equipment designed and manufactured by MIB is safe to use provided that the following requirements are met:

- They are installed in a location for their design purpose, the design pressure and design temperature are not exceeded.
- Only qualified and competent persons must complete the installation. MIB recommends that an MIB service engineer supervisors this activity or that the final installation is inspected and approved by an MIB engineer prior to it being commissioned.
- The installed equipment is operated and maintained in accordance with MIB instructions as detailed in this operation and maintenance manual.
- Only trained personnel will operate the equipment in its working environment.
- The end user should establish their own safe working procedures, using this document as a reference

WARNING - ATEX NOTES (IF APPLICABLE)

- The symbol “X” applied to ATEX marking refers to the following conditions of use:

  Maximum surface temperature depends on the operating conditions such as ambient temperature, fluid transferred, UV radiations or external EM sources. Which do not represent an internal source; class of Temperature shall therefore be determined by the final assembler/user according to the following table:

Class of Temperature	Maximum Surface Temperature	Fluid and ambient temperature
T2	≤300	175°C < T ≤ 250°C
T3	≤200	110°C < T ≤ 175°C
T4	≤135	75°C < T ≤ 110°C
T5	≤100	-196°C ≤ T ≤ 75°C

  The equipment belongs to group IIB, EPL Gb. Protection applied is Ex h, constructional safety “c” protection type. Therefore, the equipment can be used for Zone 1 and 2 only and limited to zones where marking II 2G IIB is applicable.

  The operating temperature of the equipment shall not exceed the design limits indicated in the name plate and in the technical data table of this manual.

- Usually, the MIB equipment is suitable for use in zone 1 for gas belonging to group IIA and IIB. Use with group IIC is forbidden if not explicitly indicated for the specific job. It is confirmed that for this job the equipment shall not be used on potentially explosive atmosphere with gas belonging to group IIC.
- Use in dusty environment and zone 0 is forbidden.

- The final assembler/user shall use suitable tools for the working area according to EN1127 Annex A.
- Installation shall be carried out at environment temperature.
- The installer must only use tooling appropriate to the working area, see EN 1127-1 Annex A.
- Installation has to be carried out at ambient temperature.
- During installation ensure that no metallic shocks / impacts are made to the equipment or the adjacent parts.
- Ensure that the equipment is suitably earthed, through the pipe or individually.
- If the equipment has an electrical starter/control box, the apparatus shall be installed following its OEM instructions and according to EN/IEC 60079-14 (Edition in force). Maintenance operations shall be performed following its OEM instructions according to EN/IEC 60079-17 (Edition in force).
- The installer should thoroughly follow the operating and safety instructions provided for each individual item of equipment.
- External OEM sources shall be evaluated by the final assembler/user.
- When the unit is to handle hot fluids or fluids where exothermic reactions may take place, the end user must take all the necessary measures to ensure that the hot surface of the equipment cannot provide a source of ignition to the surrounding gas, vapour, mist or dust atmosphere.
- Risk analysis of actuated parts has been carried out considering that the movement speed of moving parts is lower than 1m/s.
- If flow control valves are present in the equipment for the valves closure speed regulation, the final assembler/user shall evaluate the ignition sources related to adiabatic compression which does not represent an internal source.
- In order to prevent overheating which could cause ignition of potentially explosive atmosphere, ingress of foreign particles in MIB equipment shall be avoided in order not to compromise correct functioning and movement.
- The hydraulic oil used for activation MIB equipment shall have ignition temperature higher by 50°C minimum than the maximum surface temperature applicable for the equipment.

1.3. SAFETY DATA

This section is to be considered only if European Directive 2006/42/EC is applicable for the project.

Being the MIB equipment a “partly completed machinery” it must not be put into service until the final machinery/assembly into which it has to be incorporated has been declared in conformity with the relevant provisions of the 2006/42/EC by the final assembler.

The MIB equipment in subject only partially meets the essential health and safety requirements in Annex I of the Machinery Directive 2006/42/EC and in particular it meets the following requirements of the Annex I:

R.E.S.S.	Description	Comments and notes for the final assembler (or loading arm manufacturer)
1.1.3	Materials and Products	Materials are suitable for the scope of supply and are in accordance with the major requirements/technical data of the specific project.
1.1.5	Design of machinery to facilitate its handling.	The equipment is complete with suitable flanged connections. It can be lifted and maneuvered in a safe manner for final assembly and installation in the Marine Loading Arm, taking due care and consideration of the instructions for lifting and transport as described in Section 4 of this document. These instructions should be incorporated into those for the fully assembled Marine Loading Arm by the final assembler/loading arm manufacturer, in order to guarantee that the operator will be able to handle the equipment in safely during each operation.
1.3.1	Risk of loss of stability.	Once installed in the loading arm, the MIB equipment is stable and firmly connected by suitable anchor systems. Obviously, stability requirements of the final assembled Marine Loading Arm complete with MIB equipment are under the control and responsibility of the final assembler/loading arm manufacturer, and the structural stability, movements check, etc shall be verified.
1.3.2	Risk of break-up during of operation.	The MIB equipment has been duly designed and manufactured according to recognized international standards and codes, in order to guarantee the necessary mechanical strength and pressure resistance according to the project data given by the customer (ref. PED Certification) It shall be mandatory that both the final assembler and the end user/operator handle and operate the equipment within the project parameters.
1.3.4	Risks due to surfaces, edges or angles.	Flashes, sharp edges or angles which can cause cuts or lesions shall be avoided.
1.5.3	Energy supply other than electricity.	This requirement is applied only for MIB relevant parts, such as hydraulic circuits. It is important that the final assembler complies with the hydraulic

		connections scheme which shall be in accordance with the work carried out by MIB during the assembly step in the MIB workshop (including the safe fixing of the flexible hoses) and that he guarantees that the MIB equipment will operate within the parameters considered and foreseen. The complete hydraulic oil pressure system for the Marine Loading Arm shall be evaluated in accordance with EN982 (ref. Point 6), which is possible only after the final assembler has built the complete circuit for the complete machinery and not before.
1.5.6	Fire.	It is essential that all possible ignition sources pertaining to the MIB equipment itself are avoided Note: the final assembler shall also prevent and avoid the ignition sources due to the Marine Loading Arm, and the end user will be careful that the operating conditions and the product handled will not overheat above the maximum design value given for the MIB equipment.
1.5.7	Explosion.	The equipment produced for the specific project is certified in accordance with ATEX Directive (if applicable). The product/fluid handled and allowable temperature range is summarized in Table 1.

WARNING

The final assembler shall comply with all the relevant health and safety requirements applicable for the complete machinery/Marine Loading Arm, such as risks relating to moving parts (typical for the MIB cross linkage and clamps) or control devices and notification of risks that cannot be eliminated (for instance risks related to hot surfaces, etc.).

The MIB equipment shall be put into service only after the Marine Loading Arm has been fully assembled and declared to have fulfilled all the requirements of Machinery Directive 2006/42/EC, under the responsibility of the final assembler.

These instructions are prepared for the final assembler on the basis that the MIB equipment is partly completed machinery, however it is essential that the assembler incorporates these instructions into the manual for the complete machinery to be provided to the end user.

1.4. SAFETY PRIOR TO AND DURING OPERATION

- The operators of the equipment must be fully trained and understand all the procedures required to operate the transfer system.
- All the operator must wear all necessary personal protection equipment as required by the local site regulations, at the location where the MIB equipment is installed.
- The equipment is usually hydraulically driven. If during operation there is a hydraulic leak the equipment should not be used until it has been repaired.

DANGER

High-pressure hydraulic fluids are dangerous and can cause serious injuries to personnel. Additionally, the chemical composition of hydraulic oil can be dangerous to both the environment and personnel, always refer to the relevant safety data documentation for the hydraulic oil being used.

- The MIB equipment is fitted to a Marine Loading Arm, which is a moving structure; always stand clear and designate one person only to give all instructions.

DANGER

- **Under no circumstances during the transfer operation shall personnel stand close to the manifold area; this is standard marine practice. If an emergency release is actioned there is a risk of personnel being seriously injured by the violent operation of the emergency release coupler.**
- **Most MIB equipment contains moving parts, which can cause serious injury. Keep hands and clothing clear of moving parts. It is the responsibility of the final assembler to ensure that the operator is adequately protected against injury resulting from moving parts. It is essential that during all maintenance operations the equipment is disconnected from the hydraulic power source. Each intervention shall be carried out only by qualified personnel.**

- Some MIB equipment is fitted with a blanking plate. Before attempting to remove the blanking plate ensure that the equipment is free from product and gas.

DANGER

When removing the plastic plug and/or the blanking plate, never stand directly in front of the equipment but to one side.

- Some MIB equipment requires loose parts to be fitted. If these are in excess of 20kg one person should not lift it without proper ancillary equipment.
- The final assembler will evaluate all devices and protection required against vibrations, clashes and impacts or natural events (such as earthquakes, wind, etc.).

1.5. SAFETY DURING MAINTENANCE

- Before carrying out any maintenance, the equipment must be isolated from the process line, from all power sources and it must be confirmed that there are no residual pressure(s), elastic elements or potential energy sources present. Ensure that the hydraulic system is de-pressurized and all the electrical equipment is isolated.

DANGER

The equipment is operated by hydraulic power, before commencing any maintenance procedure involving the hydraulic circuit ensure it will be de-pressurised.

- All the operator must wear all necessary personal protection equipment as required by the local site regulations, at the location where the work will be performed. Suitable personnel protection equipment must be worn when using solvents, degreaser or cleaning fluids.
- Depending on the local site conditions all the necessary permits to work will need to be in place.
- Only suitably trained and qualified personnel should be entrusted with this type of work.
- All personnel carrying out maintenance work on MIB equipment should first read and understand the operations and maintenance manual.
- Basic maintenance and inspection instructions are included in the relevant section of this manual. For major maintenance procedures it maybe be necessary to remove the ERS from the MLA and transport it to a workshop to be worked on. For this type of intervention MIB recommends that an MIB service engineer is hired to carryout/supervise this work.
- Always use MIB manufactured and supplied spare parts. Spare parts provided by others may not be manufactured in the correct grade of material and to the correct surface finish and tolerances. **MIB cannot be responsible for any failures due to incorrect or sub-standard parts being used.**
- Always dispose of used or worn parts in a correct manner to protect the environment.
- Dispose of all waste hydraulic oil in a correct and safe manner to protect the environment.

DANGER

- **Do not burn discarded elastomeric/PTFE/PCTFE seals, as this will release dangerous toxic fumes into the environment.**
- **Never use the blanking plate (if supplied with the unit) for pressure testing. Always use a fully pressure rated blind flange**

1.6. PPE FOR THE MAINTENANCE TECHNICIAN

It is mandatory to use (or have available) the following PPE to protect the operator's safety when using the ERS, or in general during activities on the Loading arm.

WARNING

- Since the working and operative environments are not always known, the PPE mentioned above and described in the below table only refer to the use and maintenance of equipment included in the present scope of supply. It is the employer's responsibility to impose additional PPE according to the requirements of working environment.
- It is mandatory that anyone working on the systems described in this manual shall have available proper PPE as described in the below table, any additional specialised PPE that may be required over and above that indicated, such as Safety Glasses/Goggles, Ear Defenders and Self inflating Life belts, shall be advised by the Site operator prior to commencement of work and in some cases supplied by him.
- Appropriate clothing such as overalls and weatherproof jackets must be fire-proof to accepted standards and be complete with high visual markings.

Identification pictogram	Description	Notes
	FOOTWEAR	**Safety footwear** should be worn to avoid risks due to materials falling during machine positioning and/or storing operations.
	PROTECTIVE GLOVES	**Protective gloves** should be worn if harmful materials have to be handled.
	HELMET	A **Safety helmet** should be worn during machine storing operations to prevent dangers from raised loads.
	APPROPRIATE CLOTHING	**Appropriate clothing** such as an overall: Do not wear clothes with wide sleeves and/or laces which could get caught in mechanical parts.

HEALTH AND SAFETY INSTRUCTIONS 1

WARRANTY 2

REPLACEMENT PARTS 3

PRESERVATION, PACKING, HANDLING & STORAGE 4

DESCRIPTION OF EQUIPMENT 5

OPERATING INSTRUCTIONS 6

INSTALLATION 7

MAINTENANCE & INSPECTIONS 8

COMPONENT SERVICING 9

2. WARRANTY

WARRANTY

See specific project contract for detailed information on Warranty terms and conditions.

The applicability of this warranty is subject to the following conditions being strictly observed and implemented:

- The specific design conditions/parameters relevant for the MIB equipment on this project are not exceeded.
- The user(s) fully complies with the operating and maintenance instructions contained in this document and only original MIB spare parts are used where replacement is necessary (see Section 3).
- Packing, preservation and storage of equipment is undertaken in accordance with the MIB applicable quality procedures which, where applicable, may be supplemented by specific additional contract requirements (see Section 4).

MIB After Sales Dept. recommends that an MIB service engineer visits site to pre-commission and commission the MIB equipment and to undertake operational checks and tests on the equipment prior to use. It is strongly recommended that the equipment is not operated or put into service prior to the visit of the MIB engineer.

Save and except as specifically stated in this Section, MIB accepts no liability for any loss or damage to property, or death or injuries to any persons, or for any damage of any kind, direct or indirect including without limitation, loss of use, income or profit.

HEALTH AND SAFETY INSTRUCTIONS	1
WARRANTY	2
REPLACEMENT PARTS	3
PRESERVATION, PACKING, HANDLING & STORAGE	4
DESCRIPTION OF EQUIPMENT	5
OPERATING INSTRUCTIONS	6
INSTALLATION	7
MAINTENANCE & INSPECTIONS	8
COMPONENT SERVICING	9

3. REPLACEMENT PARTS

The use of MIB supplied replacement parts will assure the correct material, fit and high standard of quality of components associated with the original equipment supply.

When ordering replacement parts, it is important to quote the following:

- MIB general arrangement drawing number
- The component position number
- The component code number
- The description of the component and its material

All the above information can be taken from the GA drawing and the relevant parts list (see Annex A).

CAUTION

When purchasing parts or giving instructions for repairs, MIB original replacement parts shall be specified and procured.

Parts that have not been supplied by MIB cannot be safely relied upon to be of the correct materials, dimensions or finish. MIB cannot, therefore, be responsible for any difficulties arising from the use of such parts

HEALTH AND SAFETY INSTRUCTIONS	1
WARRANTY	2
REPLACEMENT PARTS	3
PRESERVATION, PACKING, HANDLING & STORAGE	4
DESCRIPTION OF EQUIPMENT	5
INSTALLATION	6
OPERATING INSTRUCTIONS	7
MAINTENANCE & INSPECTIONS	8
COMPONENT SERVICING	9

4. PRESERVATION, PACKING, HANDLING & STORAGE

All MIB equipment is preserved and packed prior to despatch in accordance with Company procedures and/or the contractual requirements of the specific project.

These procedures are designed to control handling, preservation and packaging activities within MIB plant facilities in order to prevent possible damage, deterioration or loss of parts during transit.

It is appreciated that the MIB equipment, upon delivery to the MLA manufacturer, is assembled into a MLA system, which generally then undergoes further tests prior to shipment to the final destination.

CAUTION

It is therefore essential that prior to final despatch from the MLA manufacturer's works, the MIB equipment is adequately re-preserved and re-packed to ensure adequate protection during shipment to final destination (responsibility of others).

Please refer to the pictures below which provide the necessary recommendations for safe handling of the MIB equipment.

WARNING

Figures in this manual are only representative and may not fully correspond to the delivered unit. Always refer to the arrangement drawings for details of the actual unit supplied.

CAUTION

MIB cannot be not responsible for any damage occurring to the equipment as a consequence of incorrect handling and proper use of the lifting points by others.

DANGER

The protection flanges attached to the ERS termination flanges are not suitable for any form of pressure testing. Use only fully pressure rated blind flanges for pressure testing.

Figure 1 - ERS SAFE RIGGING AND LIFTING FOR REMOVAL FROM PACKING CASE
THE FIGURE IS TYPICAL ONLY AND MAY NOT REFLECT IN FULL THE UNIT DELIVERED

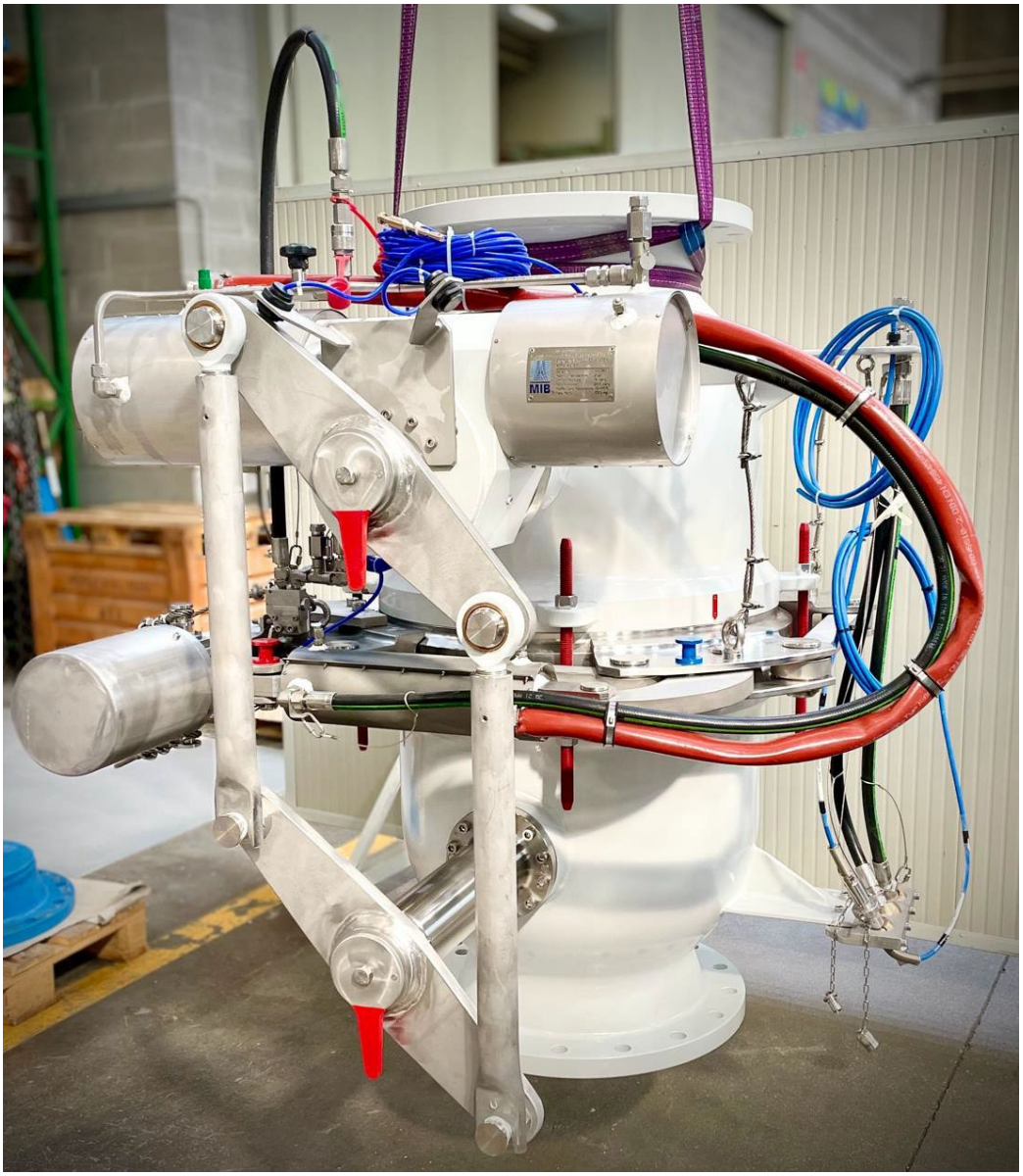

HEALTH AND SAFETY INSTRUCTIONS 1

WARRANTY 2

REPLACEMENT PARTS 3

PRESERVATION, PACKING, HANDLING & STORAGE 4

DESCRIPTION OF EQUIPMENT 5

INSTALLATION 6

OPERATING INSTRUCTIONS 7

MAINTENANCE & INSPECTIONS 8

COMPONENT SERVICING 9

5. DESCRIPTION OF EQUIPMENT

WARNING

Figures in this manual are only representative and may not fully correspond to the delivered unit. Always refer to the arrangement drawings in Appendix A for details of the actual unit supplied.

See Figure 2 and Figure 3 for details.

The Double Ball Valve/Emergency Release Coupler (DBV/ERC) provides the means to isolate the flow of product and disconnect the Marine Loading Arm from the tanker manifold in the event of an emergency.

The system consists of two ball valves held together at their mating flanges by an Emergency Release Couplers (ERC).

When activated the two ball valves close and the emergency release couplers holding the DBV valves together disconnects, allowing the two ball valves to separate.

The DBV+ERC is activated by the Marine Loading Arm control system. The speed of operation of the DBV+ERC, i.e., opening / closure of ball valve and disconnection of ERC, is adjusted by controlling the flow rate of hydraulic oil from the Marine Loading Arm power pack and/or from the DBV+ERC unit flow control valve (if present).

The hydraulic actuator for ball valve operation is directly mounted on the loading arm side valve. This actuator also operates the ship side valve by means of a mechanical drive mechanism known as the cross linkage. This cross linkage arrangement gives synchronous operation of the two valves.

The end connections of the cross linkage are ‘Y’ shaped and engage around the pins on the ship side valve lever. The Y shaped ends allow disconnection of the cross linkage when the valves separate. The universal joints built into the cross linkage ensure that there is no risk of hook up during disconnection.

The middle flanges of the ball valves are specially machined for the mounting of the ERC. These middle flanges, which are bolted to the valve bodies, contain the seal(s) that ensure a leak tight connection and house the ball valve seat assemblies.

The ERC consists of a number of clamps held together by connecting rods. The clamps and connecting rods form a collar around the middle flanges.

At one end of the collar is a spring pack, at the other end is a releasing fork that engages with pins on the spring pack. The action of moving the releasing fork over centre in relation to the spring pack connecting rod, causes the springs in the spring pack to be compressed.

This provides the necessary clamping forces to overcome internal pressure and external loads applied to the DBV/ERC system. A shear pin is fitted to the releasing fork to give added security against accidental activation by ensuring that it is properly closed.

In the event of an emergency release being activated, the hydraulic system will first close the DBV ball valves and then disconnect the ERC. The operation of the ERC hydraulic cylinders breaks the shear pins and moves the releasing forks from the locked to the unlocked position (see Figure 3). The stored energy in the springs is then released and transmitted via the tie-bar to the clamps, freeing them from the middle flanges. The loading arm side and tanker side valves are now free to separate.

The ERC's are fitted with restraining cables that control the movement of the spring pack during release.

DANGER

The Emergency Release Coupler (ERC) includes a stored energy device (Spring Pack). On Operation of the Emergency Release System the stored energy in the Spring Pack is released. This causes a violent operation of the spring pack which is extremely dangerous and can cause VERY SERIOUS INJURY to operators. MIB recommend that during Emergency Release Operations personnel must be at least 1.5 meters away from the equipment. Special attention should be paid to safety procedures referenced throughout this manual.

Supplied as standard with each of the ERS are 4 off reassembly stud bolts and nuts; these are painted in red colour, see Figure 4 for details.

The hydraulic control system is detailed in the project hydraulic circuit, please refer to the Annex B of this manual.

The DBV/ERC supplied for this project is for High-pressure Natural Gas (HPNG) application, therefore in addition to the hydraulic lines provision is made for two vent ports located at the upper ERS mating flange and through dedicated fittings and hard piping. These two vent ports shall be connected to the blow down system of the MLA which shall also include two blow down valves (not included in MIB scope of supply) in order to allow for the depressurization of the HPNG trapped between the two spheres after their full closure due to an ESD1 or ESD2 sequence is triggering and before release of the Emergency Release Collar.

In addition to the above described lines, this DBV/ERC also includes electrical proximity switches or supports for its installation by others. Their function is for system status/monitoring purpose, to be integrated in the MLA control system by others.

This DBV/ERS supplied for this Project is equipped with the following proximity switches:

- Ball Valves Open (1 switch)
- Ball Valves Closed (3 switches)
- ERC Closed (1 switch)
- ERC reaction pin/'X' test pin in position (1 switch)

Three proximity switches for detection of the "BALL VALVES CLOSED" condition are provided to allow the application of 2oo3 voting philosophy for detection of the valves position before activation of the blow-down valves. Refer to the proximity switches datasheets included in Annex C.

Figure 2 - DESCRIPTION OF EQUIPMENT
THE FIGURE IS TYPICAL ONLY AND MAY NOT REFLECT IN FULL THE UNIT DELIVERED

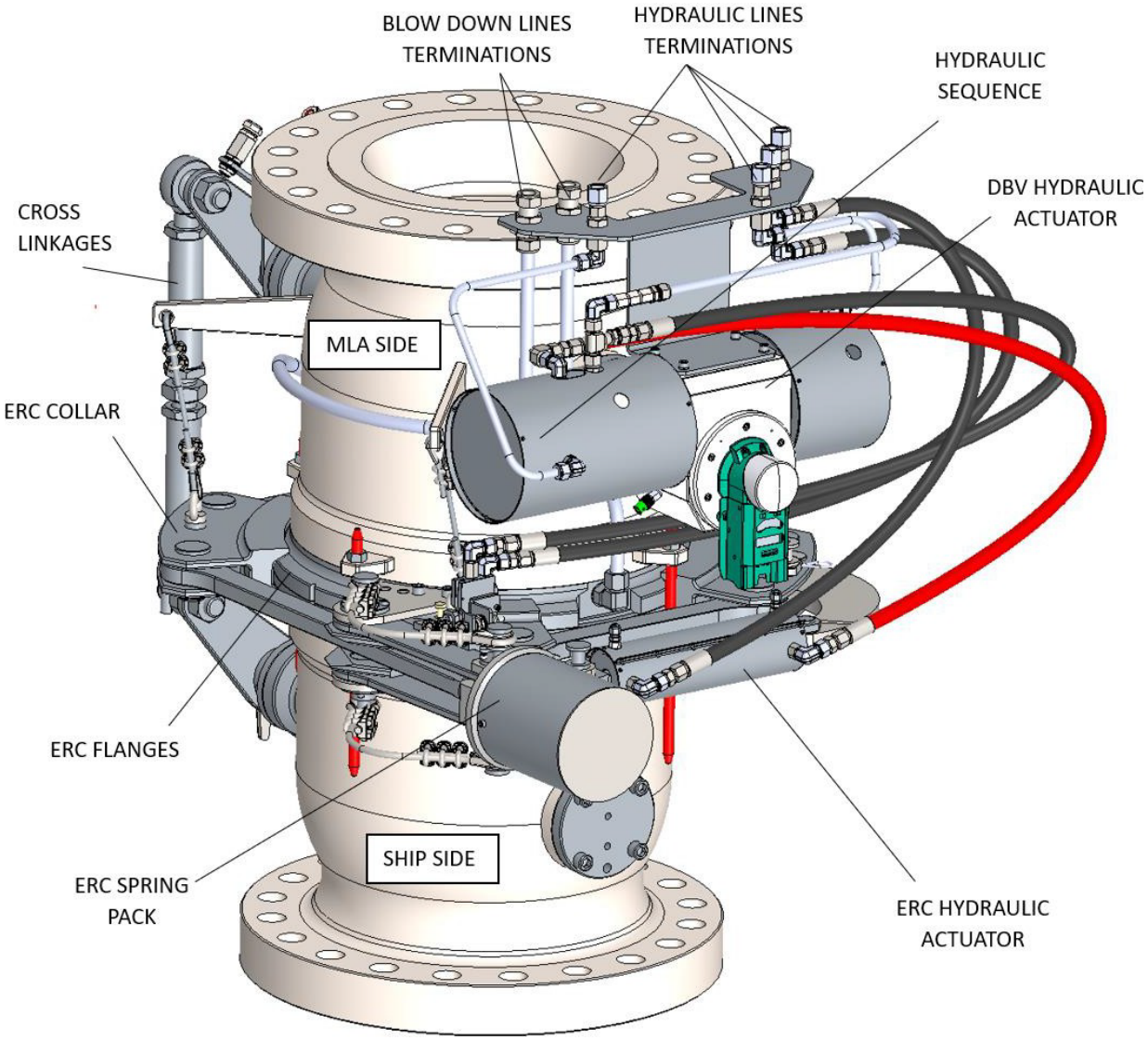

Figure 3 - FULL EMERGENCY RELEASE DBV/ERC
THE FIGURE IS TYPICAL ONLY AND MAY NOT REFLECT IN FULL THE UNIT DELIVERED

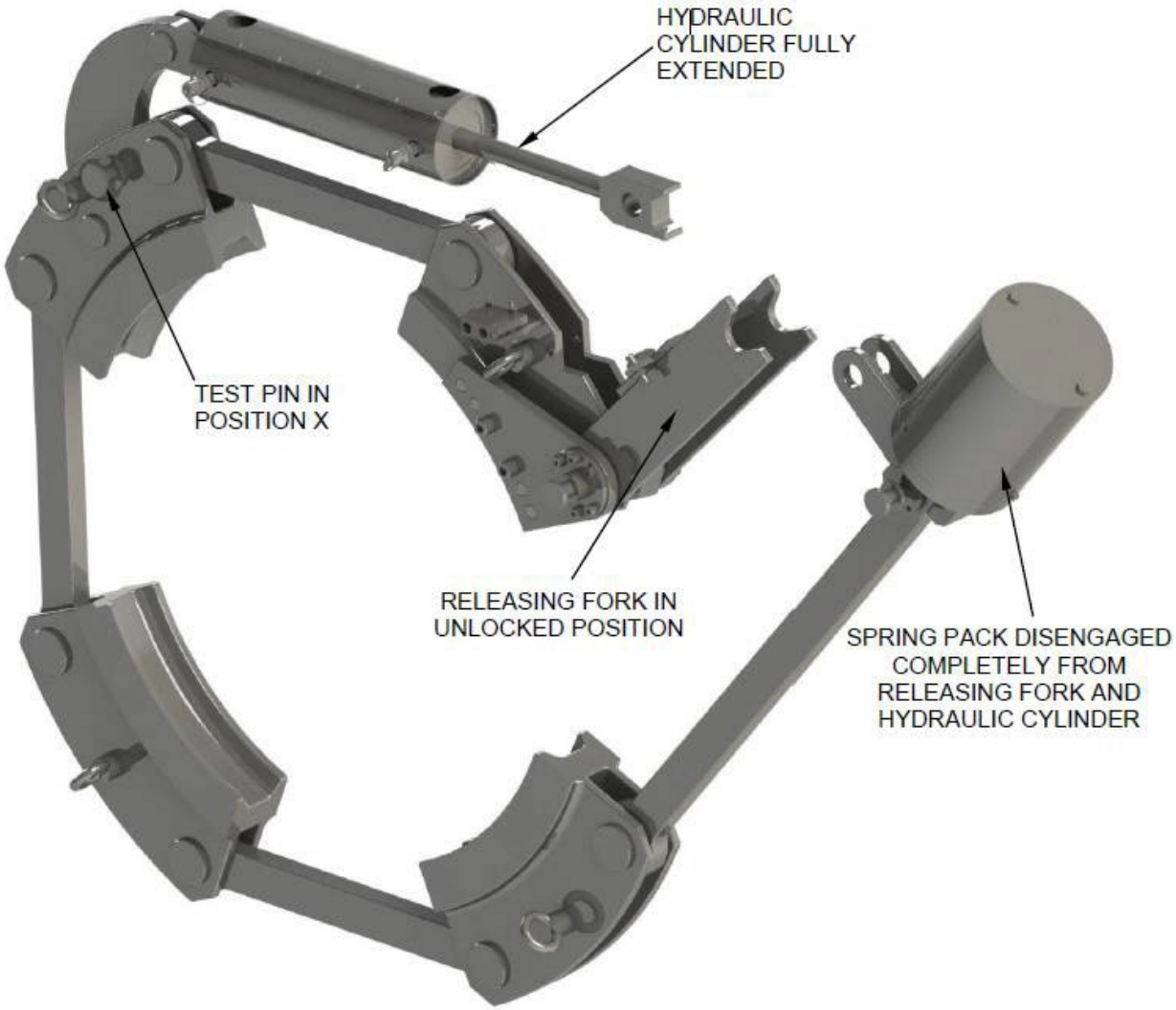

Figure 4 - REASSEMBLY BOLTING SYSTEM
THE FIGURE IS TYPICAL ONLY AND MAY NOT REFLECT IN FULL THE UNIT DELIVERED

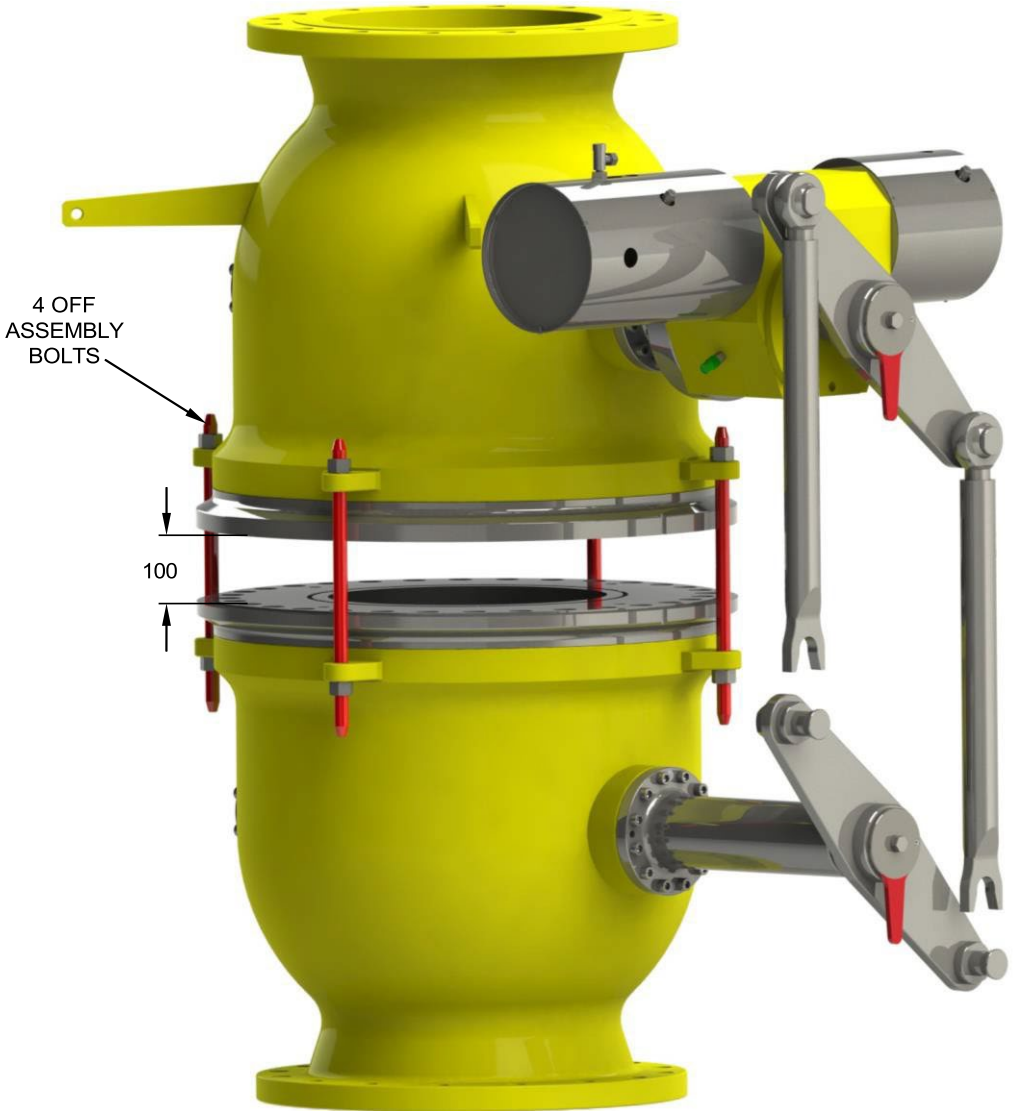

HEALTH AND SAFETY INSTRUCTIONS 1

WARRANTY 2

REPLACEMENT PARTS 3

PRESERVATION, PACKING, HANDLING & STORAGE 4

DESCRIPTION OF EQUIPMENT 5

INSTALLATION 6

OPERATING INSTRUCTIONS 7

MAINTENANCE & INSPECTIONS 8

COMPONENT SERVICING 9

6.INSTALLATION

INFORMATION

The unit has been delivered from MIB with the valves open and cleaned. Please refer to Cleanliness Certificate for clarification.

This document assumes that the loading arm has been flushed and thoroughly cleaned inside before proceeding with the mechanical installation of the DBV+ERC unit and completing all the hydraulic terminations. Any foreign matter that has entered the loading arm during fabrication and erection will tend to be deposited in the valve body.

CAUTION

This foreign matter will damage the sphere and seats, if not removed.

Before commencing the work, arrange for a complete inventory of the unit using the general arrangement drawing as a reference, and report any shortages. Take particular note of small items such as split pins, etc.

CAUTION

Pre-commissioning and commissioning of the DBV+ERC units should be undertaken under the supervision of an MIB engineer.

While performing the mechanical installation of the unit, strictly follow the Marine Loading Arm manufacturer instructions as the flange interfaces are not MIB responsibility.

CAUTION

It is recommended that all the bolts are re-torqued after a period of at least 24 hours from initial tightening. In the case of low temperature applications re-torqueing should also be undertaken after the first transfer of cargo (See Table 2).

Please refer to the hydraulic circuit provided in Annex B of this document before complete the hydraulic connections with the Marine Loading Arm hydraulic circuit.

For units equipped with vent ports for depressurization of the entrapped volume between the two ball valves, please also ensure that the vent ports tagged “VENTING 1” and “VENTING 2” in the ERS GA Drawing (refer to Annex A) are connected to the blow down system of the MLA. Blow down valves are not included in MIB scope of supply.

For units equipped with proximity sensors, ensure that the proximity switches are all connected to the MLA control system according to the MLA manufacturer wiring diagrams.

Once the DBV+ERC is assembled into the Marine Loading Arm it will be necessary to perform the following action:

Bleed any air from the hydraulic system, then undertake a full functional test of the system including closure of the ball valves, opening of the blow down valves (provided by MLA manufacturer) and release of the ERC as detailed in Section 8.2.

If the Marine Loading Arm will be hydrostatically tested in fully assembled condition, as part of the FAT or SAT test program, ensure that the testing parameters of the DBV/DCV+ERC will not be exceeded. Please refer to Table 1 of this document.

CAUTION

For low temperature DBV/DCV+ERC systems never use water as test medium as residual traces of water/humidity inside the valve could result on sealing system damage and/or valves seizure at cryogenic temperatures, preventing the Emergency Release functionality.

After installation into the MLA and FAT testing, it is essential that the MIB equipment is adequately re-preserved and repacked (if applicable) to ensure adequate protection during shipment to final destination (responsibility of others). The DBV/ERC shall be set in Stowed Condition – Option C as per Section 7.2 of this document during shipment to final destination.

HEALTH AND SAFETY INSTRUCTIONS	1
WARRANTY	2
REPLACEMENT PARTS	3
PRESERVATION, PACKING, HANDLING & STORAGE	4
DESCRIPTION OF EQUIPMENT	5
INSTALLATION	6
OPERATING INSTRUCTIONS	7
MAINTENANCE & INSPECTIONS	8
COMPONENT SERVICING	9

7. OPERATING INSTRUCTIONS

This section must be read in conjunction with the appropriate section from the operating instructions for Marine Loading Arm. The final MLA manual for the end user will include all the information contained in these assembly instructions.

CAUTION

All the removed items must be stored in a safe place so that they are readily available for reassembly after an emergency release or for stowing. These are important items and **MUST NOT** be lost.

The DVB/ERC supplied by MIB is a 4-lines operating system. This allows for independent operation between the ball valves and the ERC. A hydraulic interlock system is built in the DBV/ERC control circuit to ensure that DBV valves will be always closed before ERC disconnection.

For HPNG application it is mandatory that ball valves can be operated independently from the ERC as the Emergency Release Sequence is typically composed by the following events:

- Ball valves closure
- Blow down of the entrapped volume
- Release of the collar

7.1. BEFORE STARTING WITH PRODUCT TRANSFER

It is important that the following actions are carried out before starting with product transfer:

- Follow the loading arm manufacturer's instructions for manoeuvring the loading arm and the operating instructions for connection to the manifold flange.
- If required by the testing programme, undertake the routine test detailed in Section 7.4.
- Check that the test pin is in position X and that the re-assembly/controlled release pin Y has been removed from the DBV ERC cylinder (i.e. no pin fitted). Refer to Figure 5.
- Check that the shear pins are correctly fitted and undamaged. Refer to Figure 5.

DANGER

The shear pin must be correctly installed, it ensures that the ERC is properly closed and in its overcenter position.

DO NOT PUT THE SYSTEM IN OPERATION IF THE SHEAR PIN DOES NOT FIT PROPERLY IN ITS HOUSING! RISK OF A SPURIOUS RELEASE!

- Check that the hydraulic hoses, in the event of release, will not snag or catch up on the ship side valve or support jacks, or on the upper valve extended bonnet, if fitted.
- Confirm that the ball valves are fully open.

- Confirm that the re-assembly bolting system **IS <u>NOT</u>** installed.
- Proceed as per the loading arm manufacturers' recommendations.

Figure 5 - DBV/ERC IN NORMAL OPERATING CONDITION
THE FIGURE IS TYPICAL ONLY AND MAY NOT REFLECT IN FULL THE UNIT DELIVERED

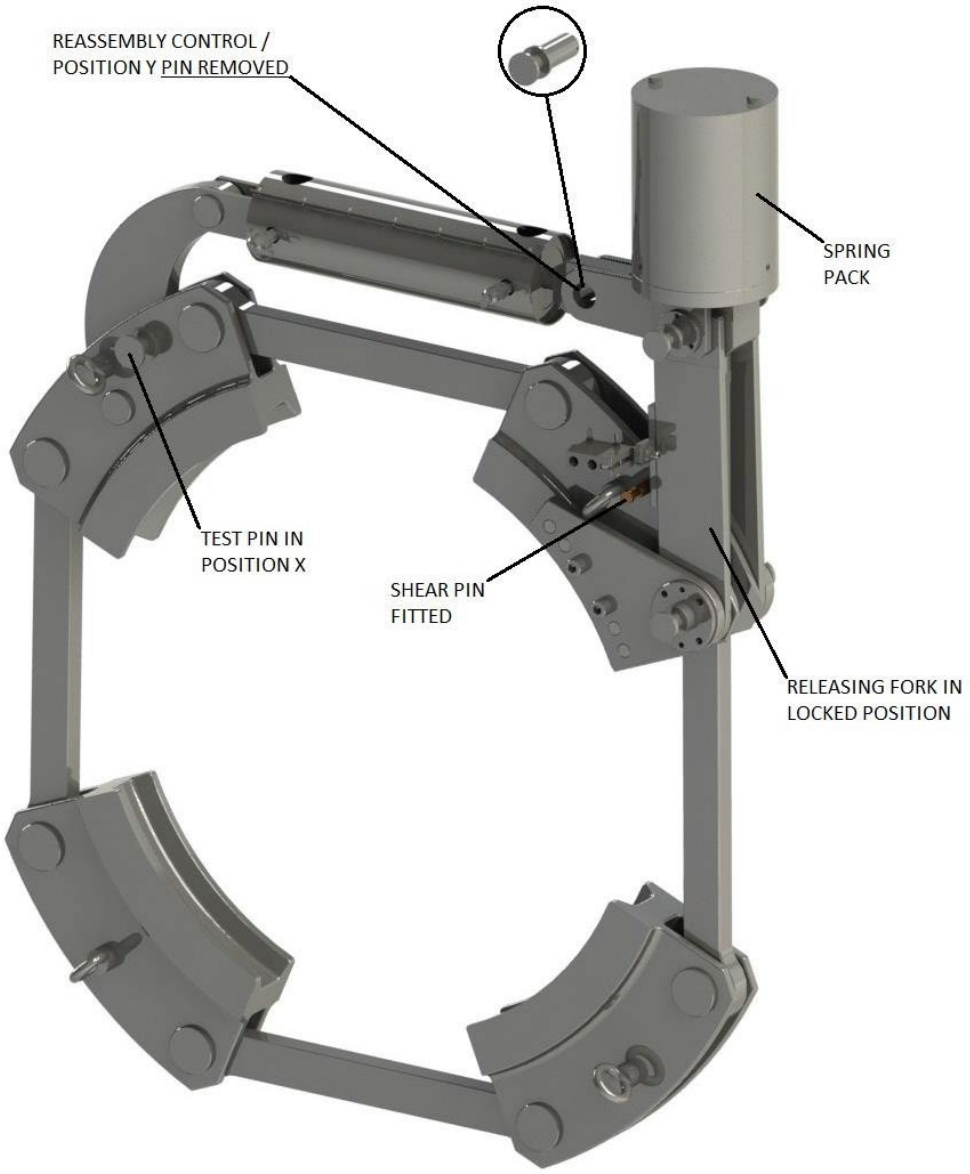

DANGER

The Emergency Release Coupler (ERC) includes a stored energy device (Spring Pack). On Operation of the Emergency Release System the stored energy in the Spring Pack is released. This causes a violent operation of the spring pack which is extremely dangerous and can cause VERY SERIOUS INJURY to operators. MIB recommend that during Emergency Release Operations personnel must be at least 1.5 metres away from the equipment. Special attention should be paid to safety procedures referenced throughout this manual.

7.2. AFTER COMPLETION OF PRODUCT TRANSFER

Follow the Marine Loading Arm manufacturer's instructions for shut down and draining of the loading arm.

Immediately prior to disconnection of the loading arm from the manifold flange set the DBV / ERC into the 'stowed condition'.

INFORMATION

The MIB ERC unit has a number of built-in safety features which allow the operator to select the most appropriate philosophy to suit the particular loading arm and local site conditions.

Stowed Condition

The ERCs of the units should be set in the routine testing condition to prevent them to accidentally unclamp.

- On the DBV ERC, the Y pin (reassembly/control pin) shall be installed and X pin (test pin) shall be removed, see figure 6.

For additional safety, the re-assembly bolting system in figure 5.1 can be installed and hand tightened.

CAUTION

All the removed items must be stored in a safe place so that they are readily available for reassembly after an emergency release or for stowing, these are important items and MUST NOT be lost.

7.3. RE-ASSEMBLY AFTER A DISCONNECTION

CAUTION

For low temperature DBV / ERC systems, it is important that the valves are allowed to return to ambient temperature before re-assembly in order to eliminate any possibility of damage to the spheres, seals or middle flanges, caused by ice formation.

DANGER

Before the reassembly process is started ensure that the Marine Loading Arm and the ship side half units are free from product and fully depressurized.

To reconnect the DBV+ERC system, the following standard procedure should be followed:

1. Attach a temporary support to the lower ball valve to ensure that the axis is vertical and the valve does not move during reconnection.
2. It is assumed that the loading arm is in a position where work can be carried out on the DBV/ERC.
3. Ensure that the ball valve spheres and the area around the valve are clean, dry and free from foreign matter.

CAUTION

For low temperature DBV/ERC systems, prior to reassembly of the ERC the exposed area around the valves seats in the middle flanges **SHALL BE ABSOLUTELY DRY** in order to eliminate any possibility of damage to the spheres, seals or middle flanges, caused by ice formation during successive cold operation.

4. Ensure that the seal area between the middle flanges is clean and free from foreign matter and that the seals are in perfect condition and correctly installed. (If new seals are required refer to Section 9.1).
5. Manoeuvre the Marine Loading Arm so that the middle flanges of the two valve assemblies are approximately 100 mm apart. If necessary, attach a rope to the loading arm side valves, to bring the middle flanges of the valves approximately parallel. Insert the re-assembly bolting and fit the nuts as shown in Figure 4. Tighten the nuts evenly.
6. Bring the DBV together by tightening the nuts on the re-assembly bolting ensuring that:
   - The notch in the middle flanges of the Marine Loading Arm side valve is orientated and aligned with the notch in the middle flange of the ship side valve
   - The cross linkage's Y shaped connections are engaging correctly around the pins on the ship side ball valve lever.
   - The spigot in the middle flanges is correctly engaged.
7. Position the ERC around the middle flanges of the DBV.
8. Engage the releasing fork with the pins on the spring pack of the DBV ERC.
9. Place the re-assembly/control pin in position Y and ensure the test pin is in position X, as shown in Figure 6.
10. Ensure that the two red arrows have been aligned (as shown in Figure 77)

11. Retract the ERC cylinder using the Marine Loading Arm hydraulic control system.

DANGER

When retracting the ERC cylinder keep hands and clothing away from moving parts to avoid serious injuries

12. Fit the shear pin and leave the reassembly bolting where they are if the loading arm has not to be used. If removed, store the reassembly bolting in a safe place.

DANGER

The shear pin must be correctly installed, it ensures that the ERC is properly closed and in its overcenter position.

DO NOT PUT THE SYSTEM IN OPERATION IF THE SHEAR PIN DOES NOT FIT PROPERLY IN ITS HOUSING! RISK OF A SPURIOUS RELEASE!

13. After the ERC has been reconnected, check that the ERC sequence valve adjustment is not damaged and it is correctly pushing the ERC sequence valve lever (as shown in Figure 7 and Figure 8).
14. Ensure that the blow-down valves are closed; refer to MLA manufacturer instructions for this operation as these valves are not included in MIB scope of supply.
15. Open the DBV ball valves using the Marine Loading Arm hydraulic control system.

NOTES

Upon completion of re-assembly/reconnection, it should be verified that the ERC sequence valve is working correctly, i.e. open and close ball valves. Due to the impossibility of opening/closing the ball valves independently from the disconnection of the ERC, the only way the closing speed can be checked is by carrying out a routine test as described in Section 7.4.

If valve opens very slowly or does not open at all, recheck the setting of the sequence valve plunger, by adjusting the ERC sequence valve adjustment screw until the correct position is achieved.

Figure 6 - ERC OPERATION / RE-ASSEMBLY
THE FIGURE IS TYPICAL ONLY AND MAY NOT REFLECT IN FULL THE UNIT DELIVERED

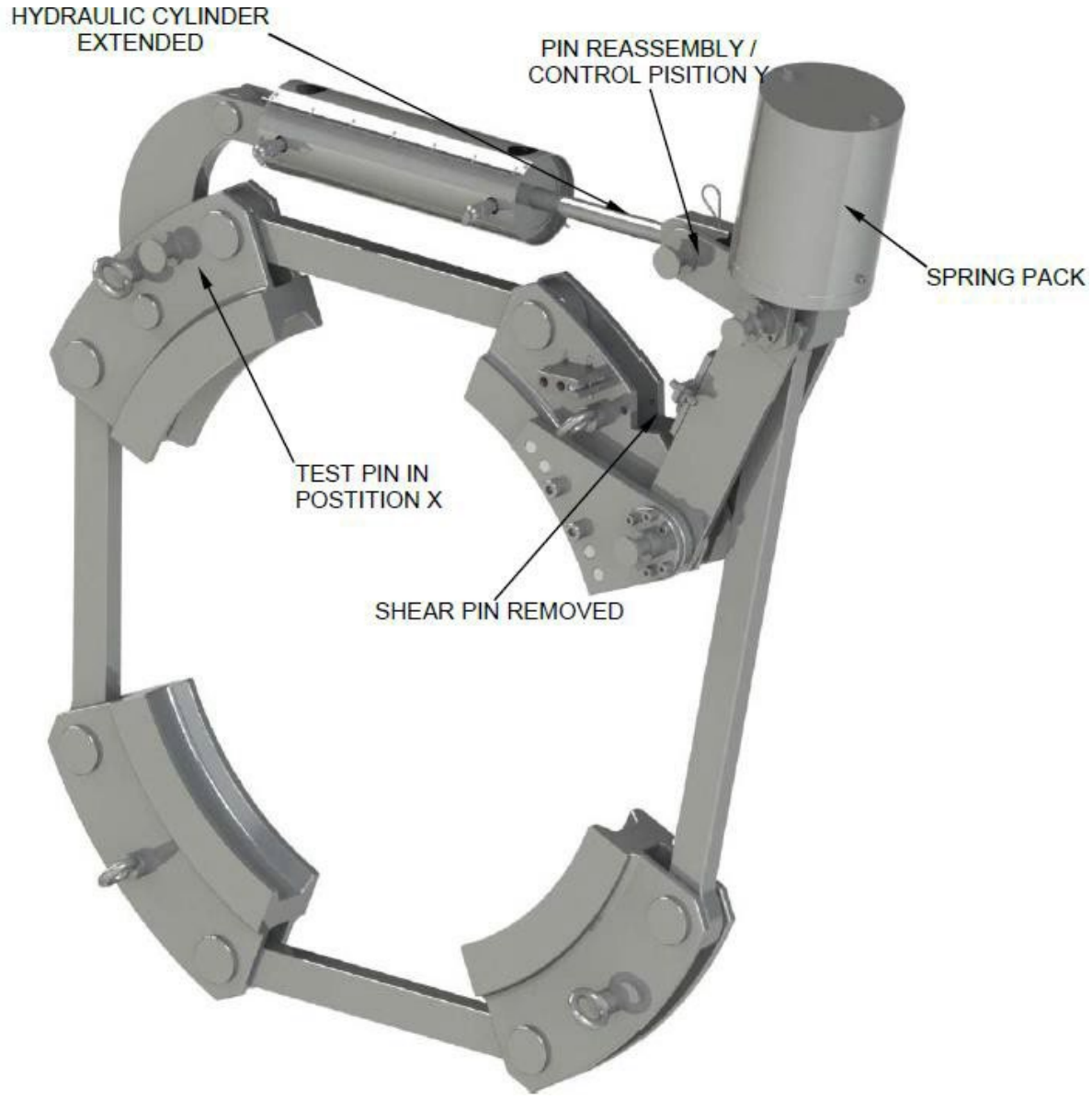

Figure 7 - INTERLOCK VALVE REASSEMBLY
THE FIGURE IS TYPICAL ONLY AND MAY NOT REFLECT IN FULL THE UNIT DELIVERED

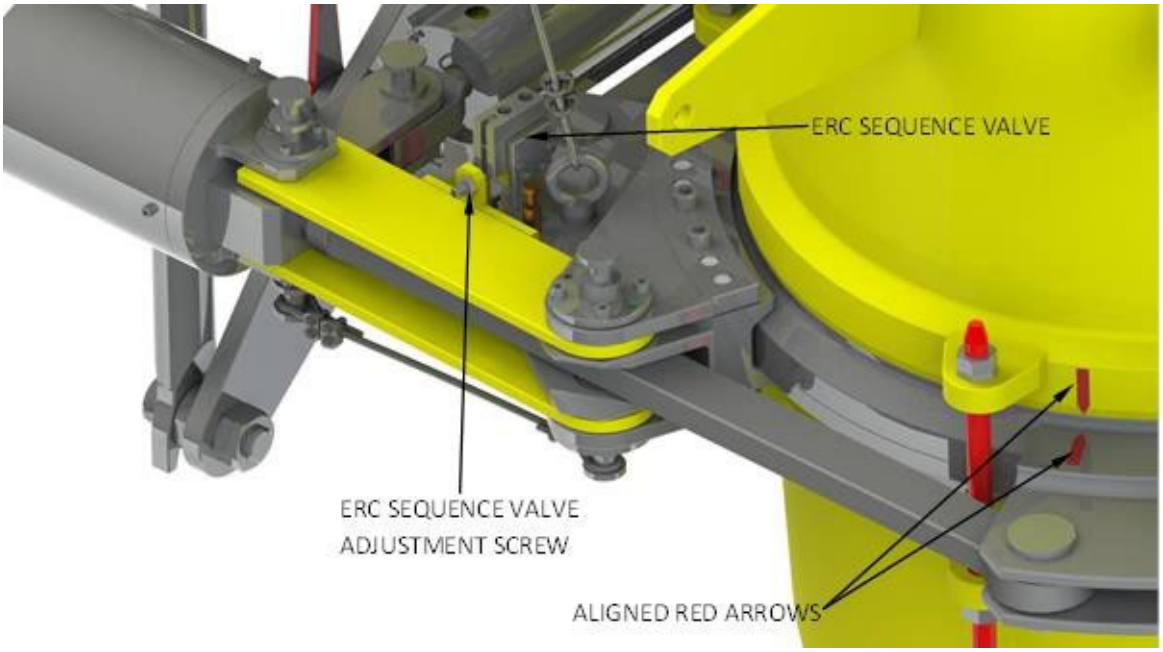

Figure 8 - ERC SEQUENCE VALVE LEVER AND ADJUSTMENT SCREW CORRECTLY SET
THE FIGURE IS TYPICAL ONLY AND MAY NOT REFLECT IN FULL THE UNIT DELIVERED

16. The Marine Loading Arm can now be returned to its stowed position as detailed in Section 7.2 or returned to its working position as detailed in Section 7.1

DANGER

If returning the DBV / ERC to the operating condition, remove the pin from the re-assembly/controlled release position Y and remove the reassembly bolting. Failure to reset the reaction pin and removal of the reassembly bolts will prevent an emergency release.

7.4. ROUTINE TEST

The following procedure is strongly recommended by MIB to be used prior to every cargo transfer, after a reassembly due to an emergency release and after maintenance procedures have been carried out, to verify that the equipment is working properly.

DANGER

Ensure that the Loading Arm has been fully depressurized before carrying out the routine test.

CAUTION

This procedure allows functioning test of the DBV/ERC actuators without achieve an ERC release.

If the loading arm is the type that has a powered lift feature on activation of emergency release, then ensure with MLA OEM that its function can be disabled or that it works properly with the complete TSA fitted.

1. Manoeuvre the loading arms so that the DBV / ERCs are accessible. Do not attach to the ships manifold or any other restraint.
2. If the loading arm is the type that has a powered lift feature on activation of emergency release, then ensure that there is adequate clearance for the loading arm movement. As a precaution insert the re-assembly bolting and hand tighten.
3. Remove the test pins from position X and insert the re-assembly/control pin in position Y on both DBV ERC, see Figure 9.
4. Stand clear then activate an emergency release so that the ball valves close and that the ERC cylinder extends, (operating the lever and not the spring pack).

DANGER

When extending the ERC cylinder keep hands and clothing away from moving parts to avoid serious injuries

CAUTION

During this test it is imperative to check visually that the ball valves fully close, prior to the DBV ERC cylinder full extending, thus proving the integrity of the hydraulic sequencing valve

5. Reset the ERC by retracting the cylinder and lever.

DANGER

When retracting the ERC cylinder keep hands and clothing away from moving parts to avoid serious injuries

6. Carry out the DBV Sequence valve test as follows:
   a. With the DBV valves in open position, pressurize the ERC Release line only
   b. Keep the ERC release line pressurized for 1 minute and verify that the ERC cylinders do not extend
   c. Release the pressure from the ERC Release line
7. Place the test pins back into position X and remove the re-assembly/control pin from position Y as shown in Figure 5. If required remove the re-assembly bolts.

CAUTION

IT IS IMPORTANT THAT THE FOLLOWING ACTIONS ARE CARRIED OUT PRIOR TO EVERY SHIP LOADING:

- **Check that the shear pins are fitted and all the re-assembly bolts (red) and nuts have been removed on the DBV / ERCs.**
- **Check that the re-assembly pin has been removed from re-assembly/controlled release position Y and that the test pin has been placed in position X as shown in Figure 5.**

Failure to do this will result in the failure of the DBV/ERC system to operate when activated during an emergency. Therefore, this check should be carried out by the nominated person responsible.

DANGER

The Emergency Release Coupler (ERC) includes a stored energy device (Spring Pack).

On Operation of the Emergency Release System the stored energy in the Spring Pack is released.

This causes a violent operation of the spring pack which is extremely dangerous and can cause VERY SERIOUS INJURY to operators.

MIB recommend that during Emergency Release Operations personnel must be at least 1.5 metres away from the equipment.

Special attention should be paid to safety procedures referenced throughout this manual.

Figure 9 - ERC OPERATION - ROUTINE TESTING
THE FIGURE IS TYPICAL ONLY AND MAY NOT REFLECT IN FULL THE UNIT DELIVERED

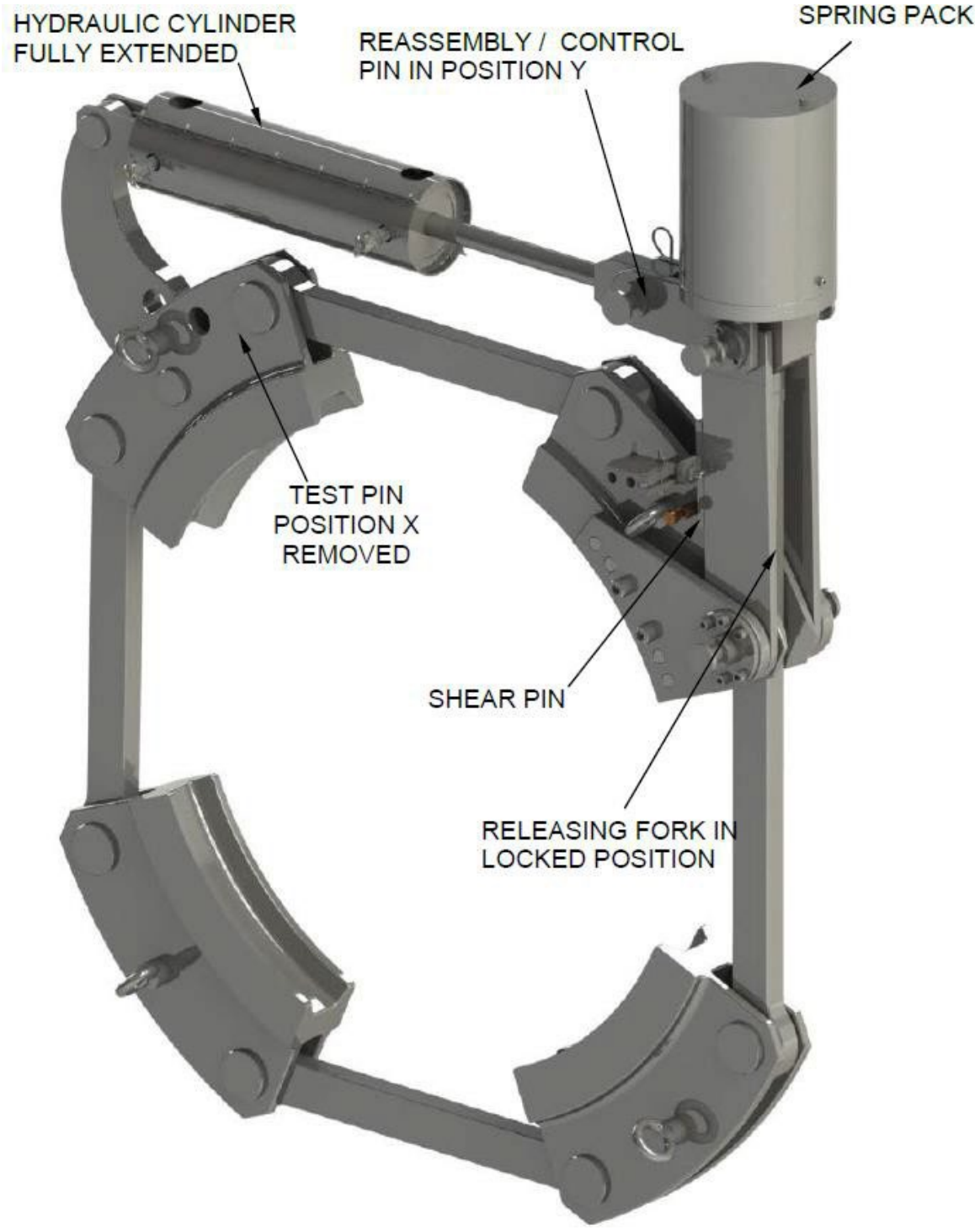

HEALTH AND SAFETY INSTRUCTIONS 1

WARRANTY 2

REPLACEMENT PARTS 3

PRESERVATION, PACKING, HANDLING & STORAGE 4

DESCRIPTION OF EQUIPMENT 5

INSTALLATION 6

OPERATING INSTRUCTIONS 7

MAINTENANCE & INSPECTION 8

COMPONENT SERVICING FOR ERS 9

8. MAINTENANCE & INSPECTION

Routine inspection and maintenance are both necessary and economic. The aim of this section is to maintain the DBV/ERC in an efficient working condition by regular checks and routine maintenance. Failure to carry out these procedures could result in operational difficulties and reduce the effective life of the equipment.

The following checklists should be regarded as a guide to assist engineers and maintenance staff in carrying out scheduled inspections. The minimum recommended frequency of the inspections is stated below; however, this may be modified upon actual operating experience.

8.1. GENERAL

The MIB equipment supplied is purpose designed to operate in a hostile marine environment on the open jetties of harbours involved in this application. To maintain the equipment in its fully working condition the following tables indicate what inspections/procedures should be undertaken and at what time scale these should be carried out.

CAUTION

All the monthly inspections/procedures should be undertaken before every transfer operation.

DV 16” FB ASME B16.5 CL.150			
DESCRIPTION	**MONTHLY**	**SIX MONTHLY**	**YEARLY**
Ensure all hydraulic pipework, fittings, connectors, valves and hoses are leak free and undamaged	√		
Grease the pins on the ball valve lever which are in contact with the ‘Y’ shaped ends of the cross linkage	√		
Check that all pins and washers are in position and secure	√		
Check there is a shear pin fitted and it is free to rotate in the location holes and retained by a split pin.	√		
Check that the two-break quick connect/disconnect hose couplings at the bracket attached to the ship side valve body of the DBV/ERC unit are correctly engaged allowing hydraulic pressure to reach the QCDC hydraulic cylinder	√		
Check, if present, the condition of the proximity sensors and mountings for damage.	√		
Check for accidental damage to the paint and "touch-up" any damaged areas	√		
Check that the fireproof sleeves on the critical hydraulic hoses is not damaged and serviceable	√		
Undertake a routine test as detailed in Section 7.4.	√		
Remove, clean and test the pressure relief valve (if present) fitted to the actuator sequence valve (Figure 10). This should relieve at approximately 6.0 barg (if present)		√	
Remove, clean and test the pressure relief valve (if present) fitted on the actuator body (Figure 10). This should relieve at approximately 0.4 barg (if present)		√	

Remove, clean and test the pressure relief valve (if present) fitted on the upper extended bonnet (Figure 10). This should relieve at approximately 0.4 barg (if present).		√	
Full Test Release (See Section 8.2)			√
Inspection of ERC (See Section 8.3)			√
Testing of ball valves (See Section 8.4)			√
Check the torque of all bolts indicated in Table 3			√

Figure 10 - PRESSURE RELIEF VALVES POSITION
THE FIGURES ARE TYPICAL ONLY AND MAY NOT REFLECT IN FULL THE UNIT DELIVERED

PRESSURE RELIEF VALVE fitted on the sequence valve (set at 6 barg approx.)

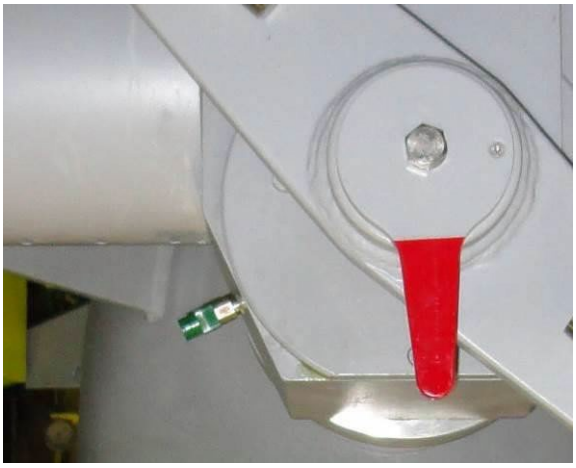

PRESSURE RELIEF VALVE fitted on the actuator body (set at 0.4 barg approx.)

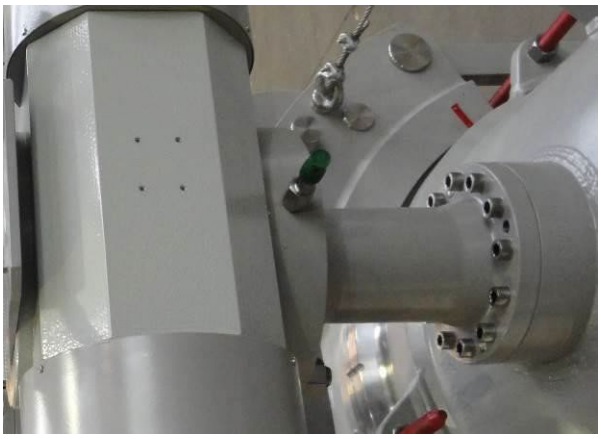

PRESSURE RELIEF VALVE fitted on the upper extended bonnet (set at 0.4 barg approx.)

CAUTION

The hydraulic flexible hoses should be replaced every 2 or 3 years, depending on use.

WARNING

Monthly and 6 monthly checks to be carried out by end user.

Yearly checks to be carried out with the assistance of an MIB Engineer.

INFORMATION

All bearings are of the self-lubricating type and therefore do not require grease.

8.2. FULL TEST RELEASE

The following procedure should be used when a full release of the ERC is required, for example prior to seal change out or other main maintenance tasks. If possible, once a year it should be recommendable to do it to verify the complete ERS system functionality.

1. Follow the loading arm manufacturer's instructions for manoeuvring the loading arm and move the loading arm so that the shipside ball valve is supported and cannot fall. It is recommended that a dummy manifold be used for this exercise.
2. Check that the shear pin is correctly fitted and undamaged. Refer to Figure 5.
3. Check that the hydraulic hoses will not snag or catch up on the ship side valve or support jacks, or on the upper valve extended bonnet during the release.
4. Confirm that the re-assembly bolting system IS NOT installed.
5. Check that the test pin is in position '**X**' and that the re-assembly/controlled release position '**Y**' has been removed from the DBV ERC cylinder (i.e., no pin fitted). Refer to Figure 5.
6. If the loading arm is the type that has a lift feature on activation of emergency release, then ensure that there is adequate clearance for the loading arm movement.
7. Stand clear and activate an emergency release as per the loading arm manufacturers' recommendations.

DANGER

The Emergency Release Coupler (ERC) includes a stored energy device (Spring Pack). On Operation of the Emergency Release System the stored energy in the Spring Pack is released. This causes a violent operation of the spring pack which is extremely dangerous and can cause VERY SERIOUS INJURY to operators. MIB recommend that during Emergency Release Operations personnel must be at least 1.5 metres away from the equipment. Special attention should be paid to safety procedures referenced throughout this manual.

8. Follow the loading arm manufacturer's instructions for manoeuvring the loading arm and move the loading arm so that the arm side ball valve is accessible and then safely block the loading arm in position before any further maintenance or inspection exercise.

9. For re-assembly of the DBV/ERC, follow Section 7.3 (re-assembly after emergency disconnection).

8.3. INSPECTION OF ERC

Proceed as per Section 8.2. When the ERC is no longer under load, check the condition of the emergency release coupler springs by removing the screws that retain the spring-pack cover. Withdraw the cover and check that the springs are undamaged. Grease if necessary. Refit the spring-pack cover and screws.

CAUTION

MIB recommend that a new O-Ring is always used prior to fitting the cover.

8.4. TESTING OF BALL VALVES

As the DBV+ERC system is designed for emergency use only, the integrity of the ball valve seals will not be apparent until an actual emergency situation has occurred. Therefore, it is suggested that the ball valves are checked for leakage following the full release test and before re-assembling the ERC, to check the seat seals integrity. Each part of the MLA, upstream and downstream the DBV/ERC shall be pneumatically tested at 6 barG and the seat area visually inspected with a proper leakage detector fluid. Alternatively, the pressure shall be monitored over a test duration. Recommended allowable leakage rates for a valve seat in service for at least one year are, respectively:

- 24 bubbles per minute;
- max. pressure drop of 0.5 bar in 30 minutes.

CAUTION

This is a major task and therefore should only be undertaken under the supervision of MIB personnel.

WARNING

It is strongly recommended to clean and remove any residual traces of leakage detector from the inspected area after the test and before rotating the spheres. If an unacceptable level of leakage is found during this test, then the valves will have to be stripped and refurbished.

It will be important to have in stock a seal kit for the DBV/DCV-ERC to replace the existing seals with new ones if necessary.

8.5. GOOD PRACTICE

- Never test operate the DBV/ERC unit unless the shipside ball valve is fully supported or the reassembly bolting is fitted and fully tightened.

DANGER

Always ensure that personnel are at least 1.5 metres away from the unit prior to operating the ERC. The stored energy in the spring pack could cause a VERY SERIOUS INJURY to operators, when the collar is released.

CAUTION

For low temperature DBV+ERC systems it is important that ball valves are never rotated when there is ice formation on the sphere. Water wash must not be used to disperse the ice.

- Ensure maintenance and production personnel operating this equipment read and understand this manual.

8.6. MAJOR OVERHAUL

After prolonged service, the DBV/ERC will need to be completely overhauled. The interval between such overhauls will vary from between 2 and 5 years, dependent upon the operating conditions, standard of maintenance and the inspection reports.

The need for an overhaul will normally be confirmed by excessive corrosion, wear of components, or difficulty in operation.

It is recommended that only minor repairs be carried out on the DBV/ERC in situ.

Major maintenance tasks should be carried out by suitably experienced personnel in a clean working area, where the components can be properly documented, repaired or replaced and tested before being reinstalled.

IMPORTANT NOTE

Only suitably qualified personnel should undertake the removal of any parts of the DBV/ERC for inspection, maintenance and repair.

MIB can provide suitably qualified engineers to provide onsite support for commissioning and service / maintenance of the equipment throughout its operational life. The MIB After Sales Department will respond to enquiries and can provide:

- Recommended spare parts lists and order processing.
- Technical updates and support.
- Maintenance and service support.

HEALTH AND SAFETY INSTRUCTIONS	1
WARRANTY	2
REPLACEMENT PARTS	3
PRESERVATION, PACKING, HANDLING & STORAGE	4
DESCRIPTION OF EQUIPMENT	5
INSTALLATION AND COMMISSIONING	6
OPERATING INSTRUCTIONS	7
MAINTENANCE & INSPECTIONS	8
COMPONENT SERVICING	9

9. COMPONENT SERVICING

WARNING

In the following Sections there are some indications for the final user to check or repair some minor issues with MIB ERS.

Generally speaking, and above all during a major overhaul of the equipment (as described in Section 8.6), before undertaking any action, **it is strongly recommended to call MIB for a service engineer** to do a general inspection and propose the further interventions/activities.

The service of the main components (sphere, shaft's seals, etc.) are NOT described in this Section, because it should be carried out by an MIB representative.

Refer to MIB General Arrangement Drawing in Annex A.

9.1. FACE SEAL

If a leakage will be noted during cooldown (if applicable) or operation or after an emergency release, MIB always recommends that the face seal is replaced as a matter of course.

To inspect or replace the seal, the system must be released as described in Section 8.2.

The seal is retained in a groove in the lower ball valve of the TSA, to change the seal it must be removed from the groove with care do not use any sharp object that will scratch the face of the ball valve and the seal groove itself.

When the seal is removed ensure the seal groove is clean, free from debris and signs of corrosion, DO NOT CLEAN THE GROOVE WITH WATER use an alcohol base cleaner that will evaporate.

Take a new seal and examine it before inserting it in the groove.

Carefully push the seal into the groove using hand pressure only; under no circumstances must the seal be forced into the groove.

CAUTION

For low temperature service DBV/ERC systems, in no circumstances the valves shall be reassembled with traces of water/humidity in the cavity between the spheres, between the mating flanges or in the seal groove. Failure to perform proper drying could result on sealing system damage and/or valves seizure at cryogenic temperatures, preventing the Emergency Release functionality.

IMPORTANT NOTE

Never put the DBV/ERC in service again, even with a new seal, if signs of corrosion will be found in the groove area without proper evaluation of the damage. It is **strongly recommended** to call MIB for support.

Figure 11 - SEAL FACE POSITION
THE FIGURE IS TYPICAL ONLY AND MAY NOT REFLECT IN FULL THE UNIT DELIVERED

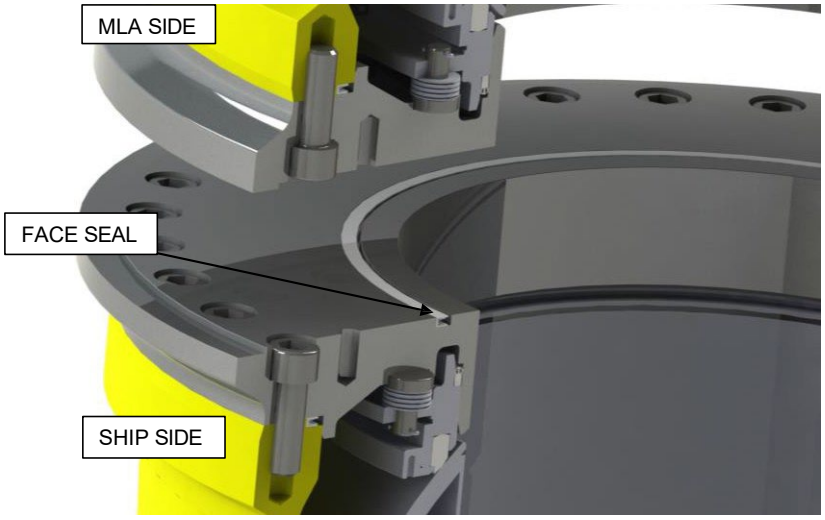

9.2. AIR BLEED PROCEDURE

- Remove the plugs on the vent ports on the actuator and install a flexible hose bridge between them (it is recommended at least 6 mm of diameter) as shown in the below Figure 12.
- Activate the oil circulation of the hydraulic line and keep it activated for not less than 30 minutes in order to purge the system from air.
- Stop the oil circulation and disconnect the flexible hose bridge, then fit the plugs on the test ports.

Figure 12 – FLEXIBLE HOSE BRIDGE
THE FIGURE IS TYPICAL ONLY AND MAY NOT REFLECT IN FULL THE UNIT DELIVERED

9.3. RECOMMENDED SPARE PARTS

Refer to GA drawings in appendix and relating Bill of Material. Quantities here indicated are for one unit.

Table 1 - SPARE PARTS LIST

SPARE PARTS FOR DV6100					
Item	**Code**	**Qty**	**Description**	**Spares for commissioning**	**Spares for 2 years**
130	DV5184	2	SPHERE SEAT	-	2
200A	1106030	1	HYDRAULIC ACTUATOR SEAL KIT	-	1
235	1100833	2	PROXIMITY SWITCH	-	1
250	1019757	2	SPRING ENERGIZED LIP SEAL	-	2
255	104022	2	PACKING	-	2
279	1019878	2	ELASTOMERIC O-RING	-	2
280	1019873	3	ELASTOMERIC O-RING	-	3
281	1019872	2	ELASTOMERIC O-RING	-	2
282	1019874	3	ELASTOMERIC O-RING	-	3
283	1019875	4	ELASTOMERIC O-RING	-	4
284	1019876	3	ELASTOMERIC O-RING	-	3
285	1019877	3	ELASTOMERIC O-RING	-	3
290	1019800	2	C-RING	-	2
291	1011893	4	C-RING	-	4
340	DV1109/02	1	DIRECTIONAL CONTROL VALVE	-	1
354	1103015	1	PROXIMITY SWITCH	-	1

SPARE PARTS FOR EV3760/02					
Item	**Code**	**Qty**	**Description**	**Spares for commissioning**	**Spares for 2 years**
40A	-	-	HYDRAULIC CYLINDER SEAL KIT	-	1
135	EV3775	1	SHEAR PIN	1	3
164	1014768	1	R CLIP	1	3
167	1103474	1	DIRECTIONAL CONTROL VALVE	-	1
180	114986	1	ELASTOMERIC O-RING	-	1
181	101790	1	ELASTOMERIC O-RING	-	1
230	1100833	1	PROXIMITY SWITCH	-	1
236	1103406	1	PROXIMITY SWITCH	-	1

Table 2 - TECHNICAL DATA SHEET

EQUIPMENT DATA		
UNIT		**ERS**
Size / Ref. G.A. Drawing N.		16" RB 12" / DV6100
Rating		ASME B16.5 CLASS 600
Weights	:L/A Side	859 kg
	:Ship Side	578 kg
	:Total	1437 kg
OPERATING DATA		
Product		HIGH PRESSURE NATURAL GAS
Pressure	Operating	ND
	Design	77 barg
	Test	115.5 barg
Design Temperature		-29 / +50°C
Design Bending Moment		3500 daNm
Design Axial Load		5000 daN
Design Shear Load		1500 daN
HYDRAULIC DATA		
Pressure	Operating	140 barg
	Design	250 barg
	Test	375 barg
Time to close valves		5 ÷ 30 seconds (flow control valve not included in MIB supply)
Time to open ERC		≤ 2 seconds
OIL VOLUMES		
ERC Cylinder	: Release / Connect	0.37 Litres / 0.31 Litres
Valve Actuator	: Open / Close	0.59 Litres

Table 3 - INTERFACE STUD BOLTS TORQUE

ITEM NO	BOLT SIZE	MATERIAL	TORQUE *
320	M20 P2.5	ASTM A320 B8 Cl.2	285 Nm
321	M16 P2	ASTM A193 B8 Cl.2	130 Nm

* Tightening torque values considering bolts with adequate lubrication.

ANNEX A - ERS GA DRAWING AND BOMs

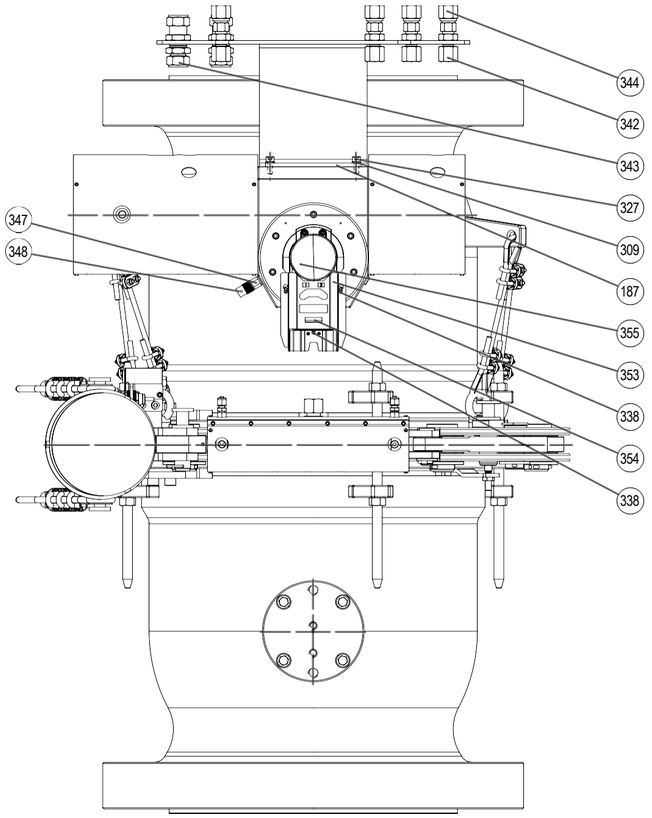

B

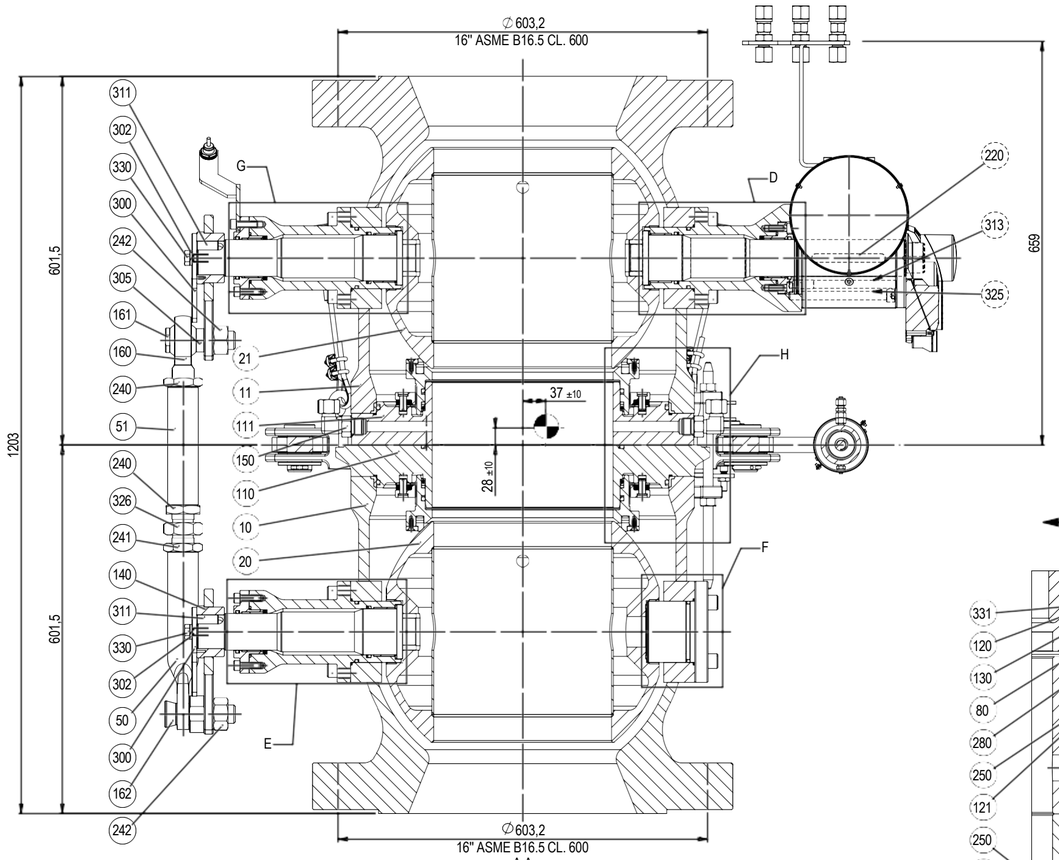

A-A

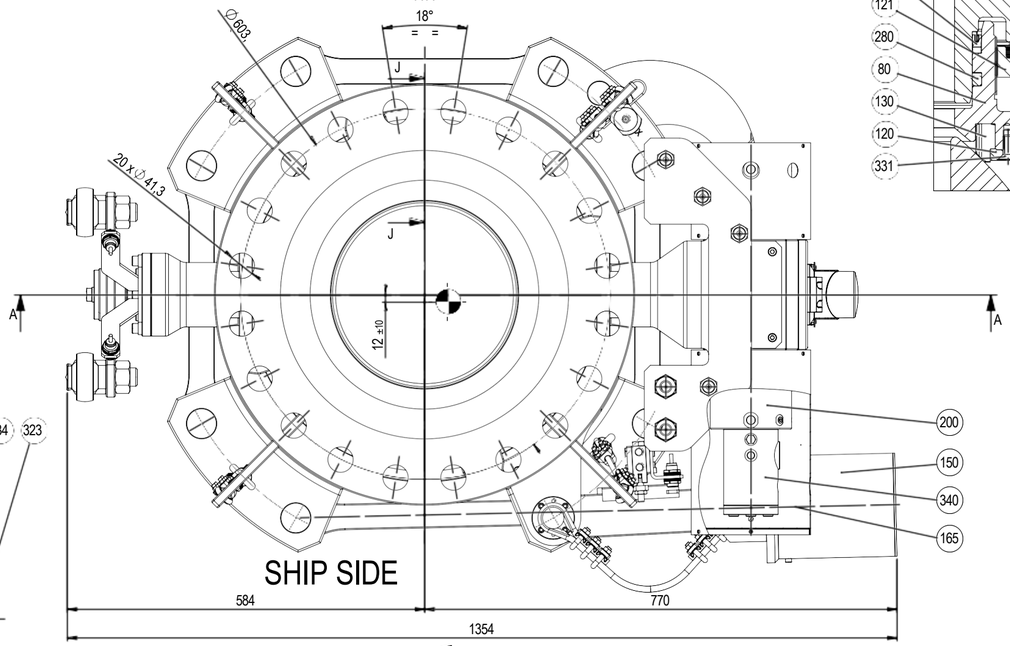

B

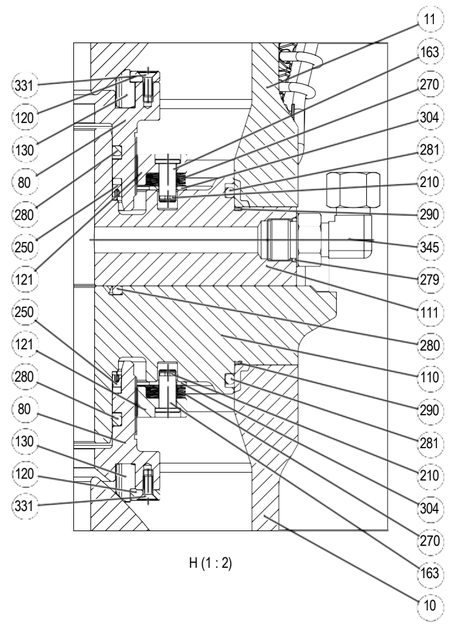

H (1 : 2)

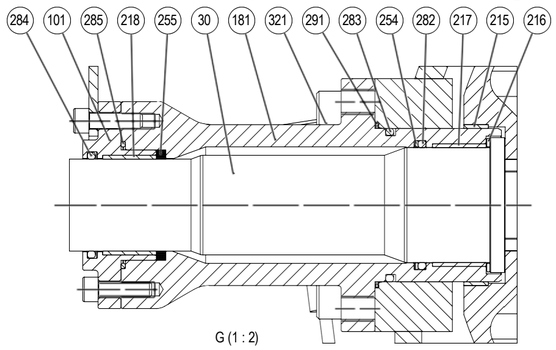

G (1 : 2)

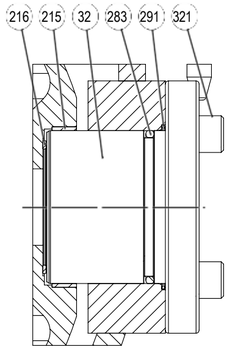

F (1 : 2)

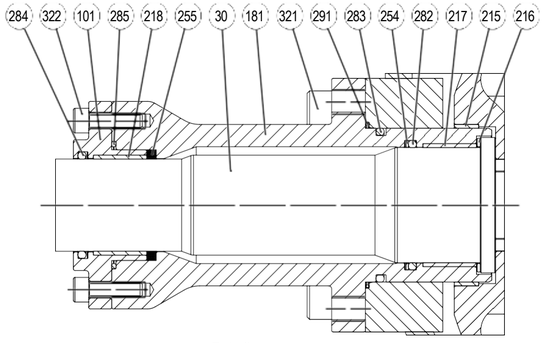

E (1 : 2)

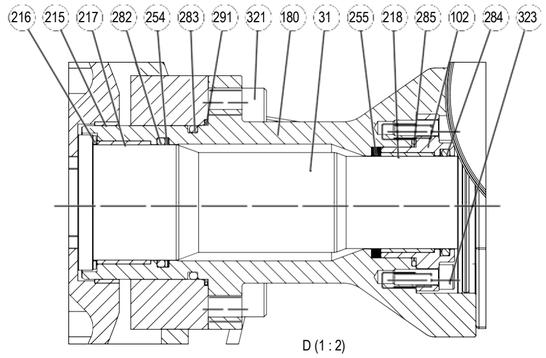

D (1 : 2)

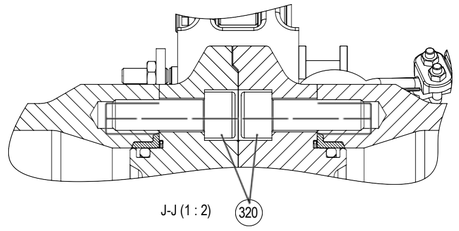

J-J (1 : 2)

DESIGN PRESSURE: 77 bar

DESIGN TEMPERATURE: -29/+50 °C

ENTRAPPED VOLUME BETWEEN BALL VALVES AFTER CLOSURE: 13,3 litres

Rev.	Rev. description	Date	Drawn	Checked	Approved
4	AS BUILT – UPDATED CODE FOR ITEM 210 AND 304	04/04/2025	BURATIN	ZIMMITTI	ZIMMITTI
3	CORRECTED FLANGE DETAILS NOTE FROM 12" TO 16" ASME B16.35 CL. 600	04/12/2024	BURATIN	ZIMMITTI	ZIMMITTI
2	ADDED ITEM 344; UPDATED ITEMS 150 - 187	26/11/2024	BURATIN	ZIMMITTI	ZIMMITTI

PROJECTION: DV 16" RB 12" ASME B16.5 CLASSE 600

HPNG SERVICE

MIB ITALIANA S.P.A.
MACCHINE INDUSTRIALI BREVETTATE ITALIA
CASALSERUGO (PADUA) ITALIA
D&E DEPT.

WEIGHT (Kg) 1425 ± 5%

© MIB ITALIANA S.P.A. - IT MUST NOT BE COPIED, OR THE CONTENTS THERE OF OR ANY INFORMATION RECEIVED IN CONJUNCTION THEREWITH BE IMPARTED TO ANY 3rd PARTY.

Sheet 1 / 2 | Size A1 | Scale 1:5

Drwg. No. DV6100 | Rev. 4

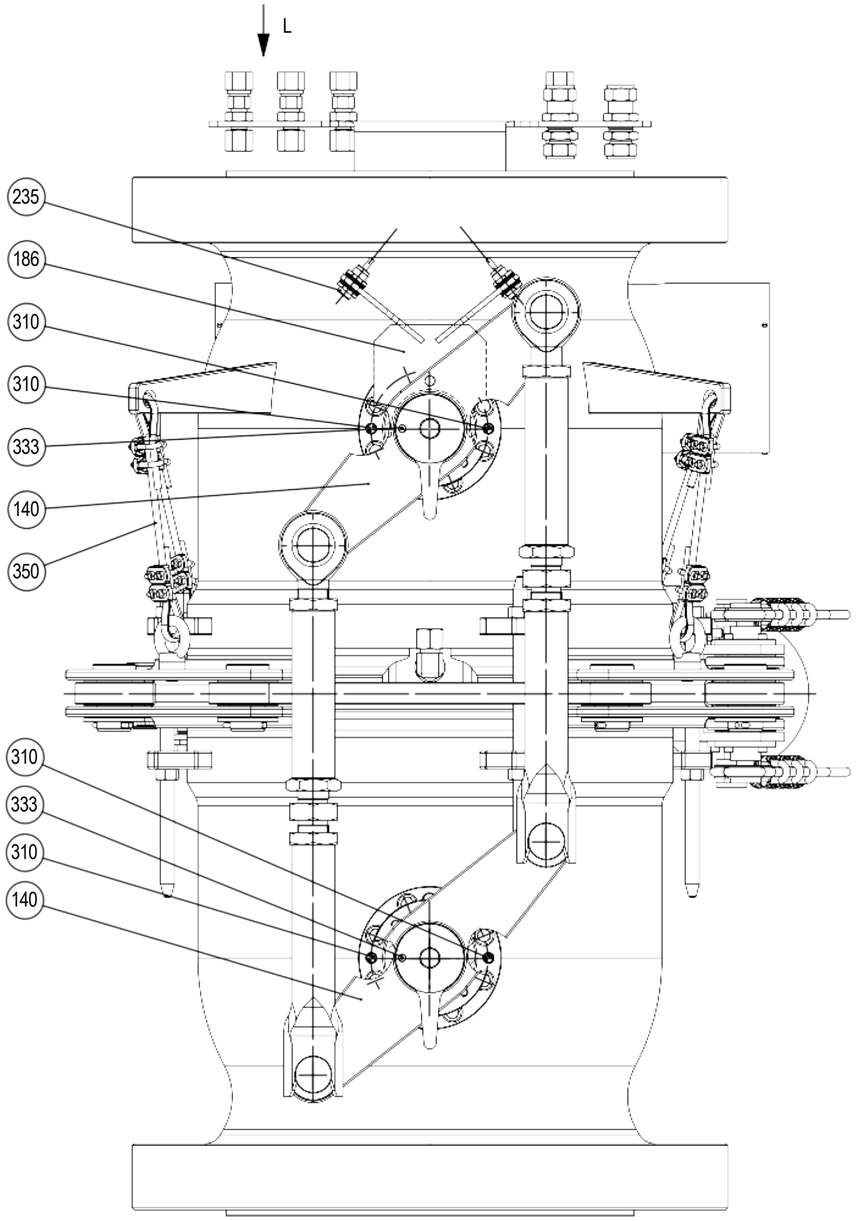

C

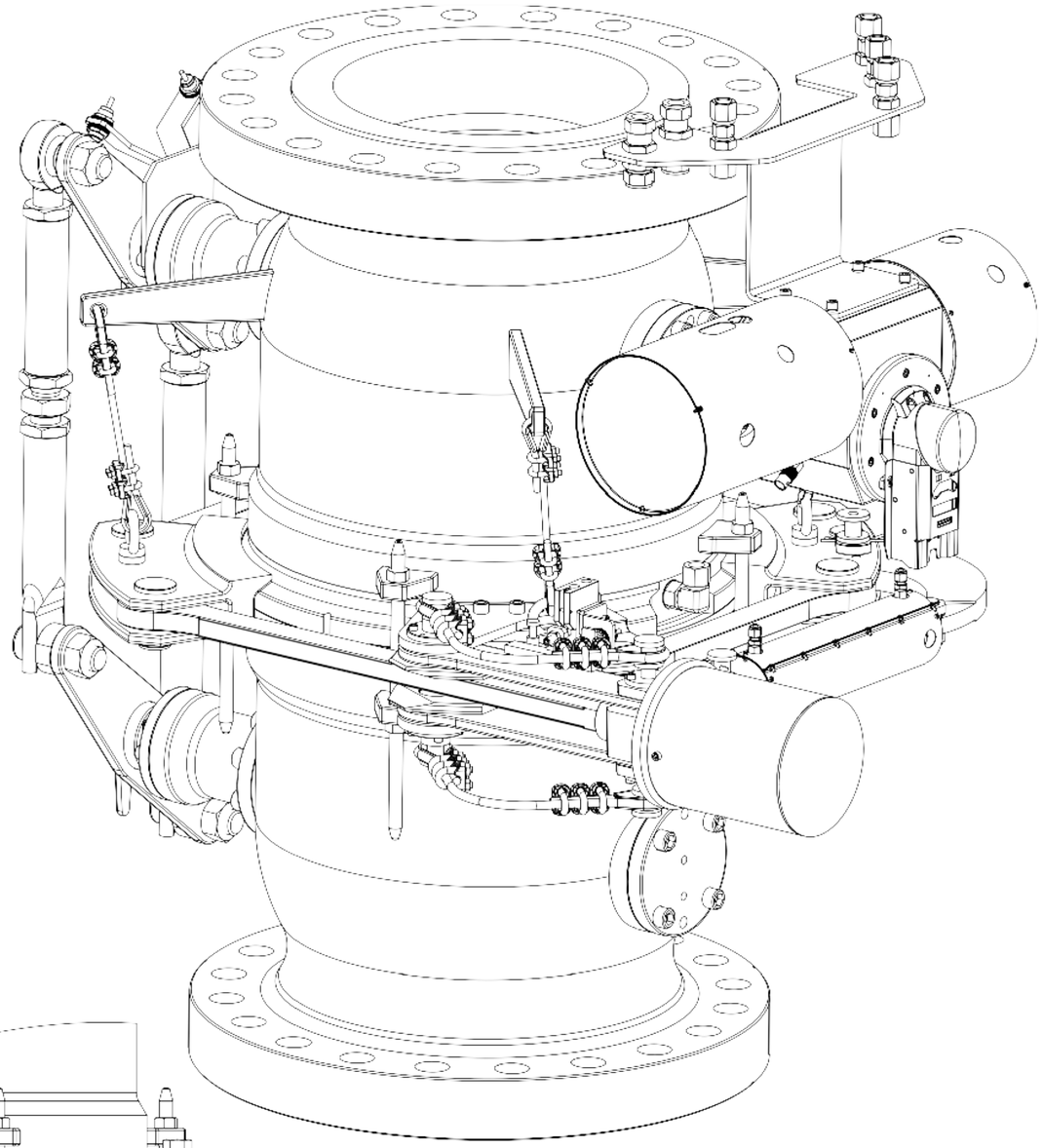

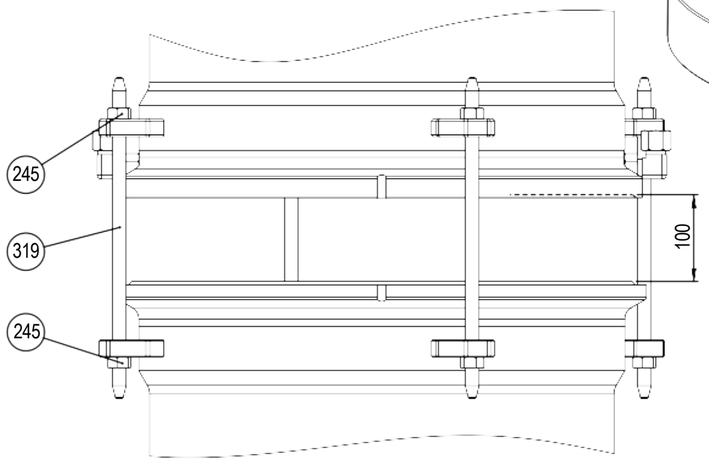

REASSEMBLY DETAIL

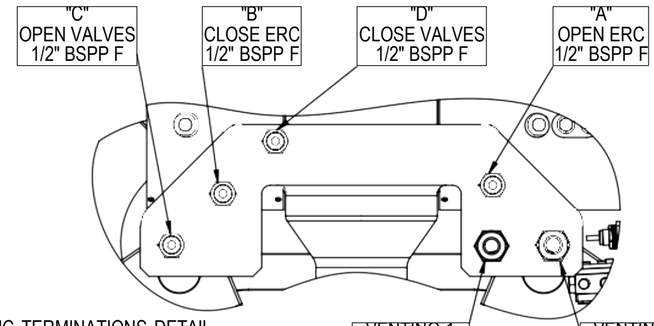

HYDRAULIC TERMINATIONS DETAIL

L

Rev.	Rev. description	Date	Drawn	Checked	Approved
4	AS BUILT – UPDATED CODE FOR ITEM 210 AND 304	04/04/2025	BURATIN	ZIMMITTI	ZIMMITTI
3	CORRECTED FLANGE DETAILS NOTE FROM 12" TO 16" ASME B16.35 CL. 600	04/12/2024	BURATIN	ZIMMITTI	ZIMMITTI
2	ADDED ITEM 344; UPDATED ITEMS 150 - 187	26/11/2024	BURATIN	ZIMMITTI	ZIMMITTI

PROJECTION

DV 16" RB 12" ASME B16.5 CLASSE 600

HPNG SERVICE

WEIGHT (Kg)
1425 ± 5%

© MIB ITALIANA S.P.A. - IT MUST NOT BE COPIED, OR THE CONTENTS THERE OF OR ANY INFORMATION RECEIVED IN CONJUNCTION THEREWITH BE IMPARTED TO ANY 3rd PARTY.

Sheet	Size	Scale
2 / 2	A2	1:5

MIB ITALIANA S.P.A.
MACCHINE INDUSTRIALI BREVETTATE ITALIA
CASALSERUGO (PADUA) ITALIA
D&E DEPT.

Drwg. No. DV6100

Rev. 4

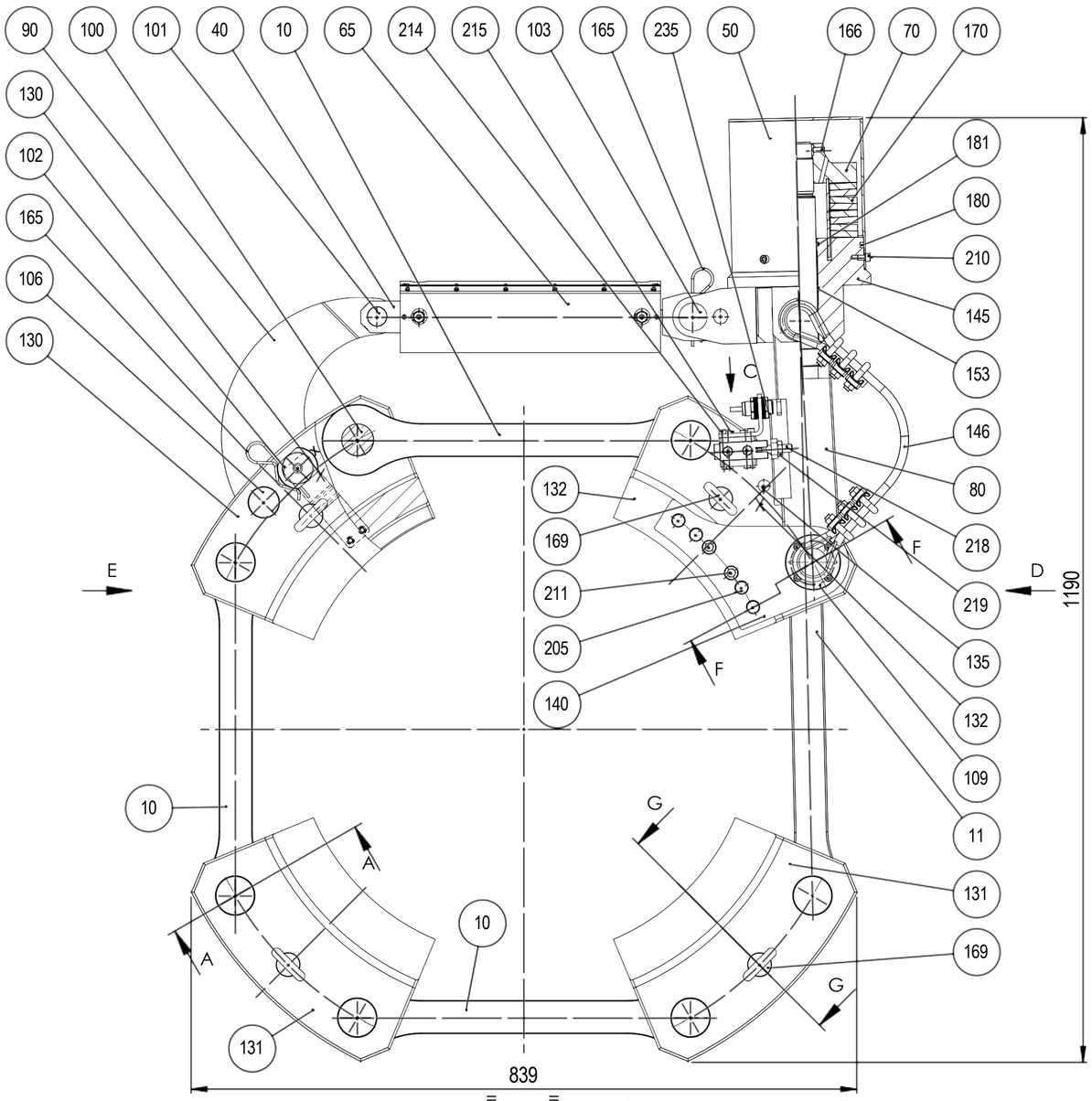

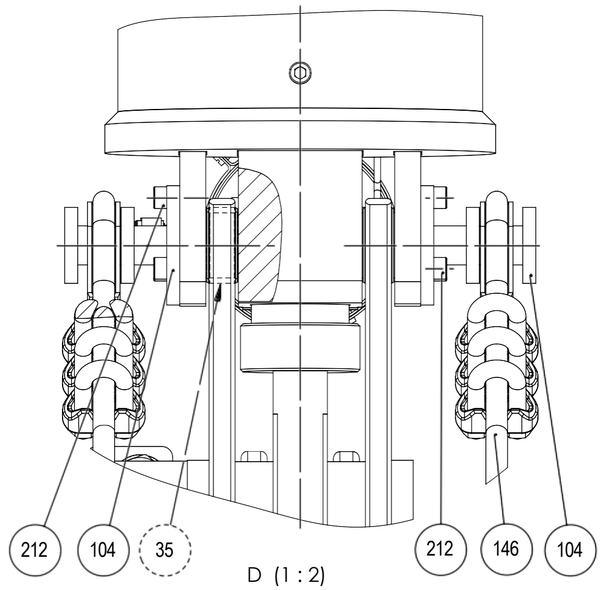

D (1 : 2)

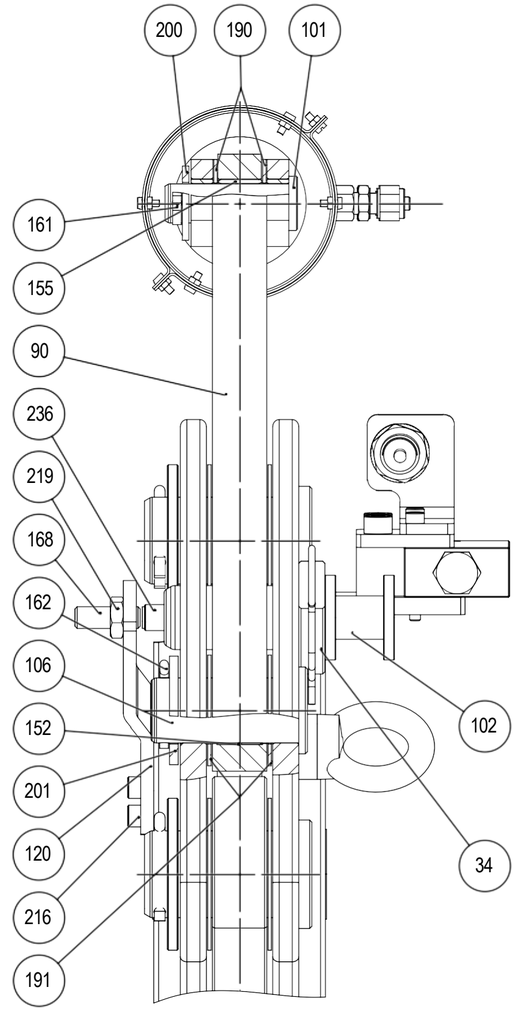

E (1 : 2)

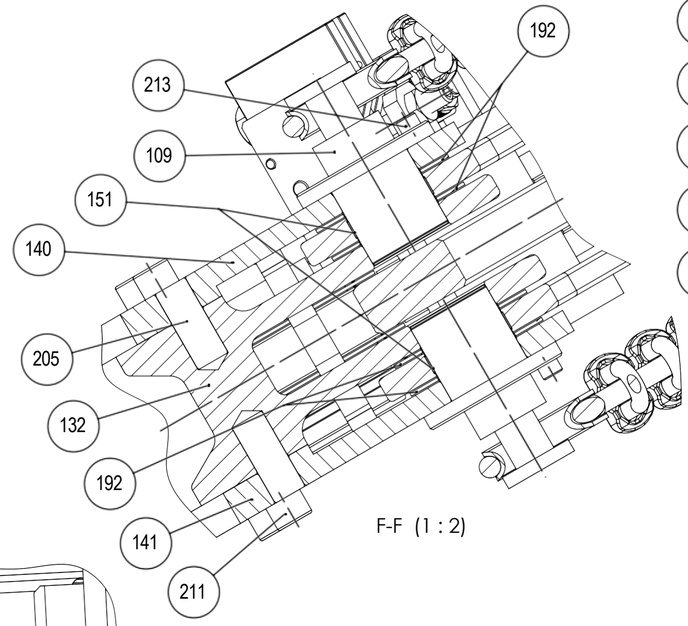

F-F (1 : 2)

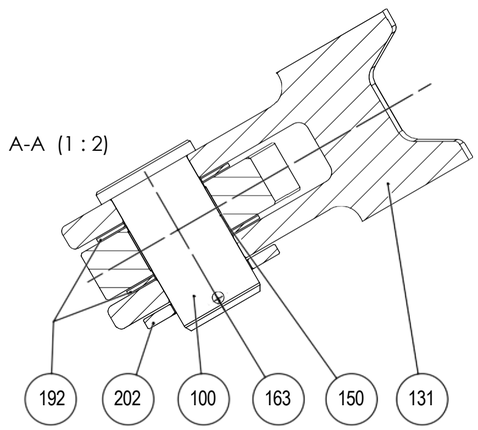

A-A (1 : 2)

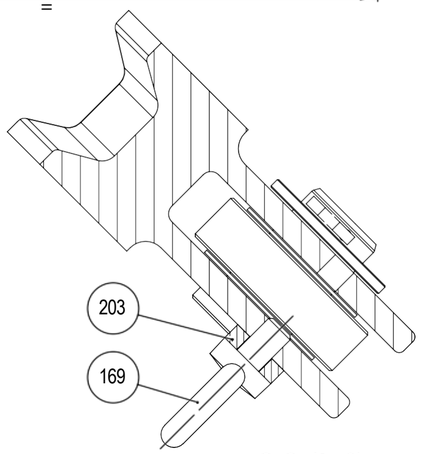

G-G (1 : 2)

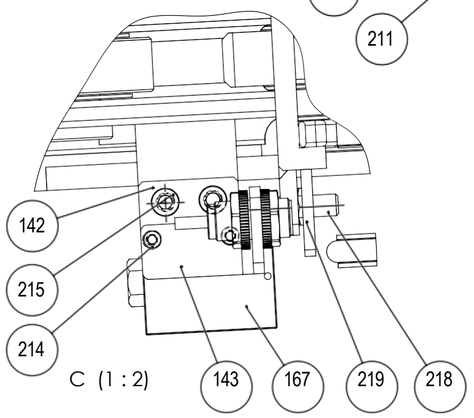

C (1 : 2)

1	AS BUILT – MODIFIED ITEMS N. 11-50-70-145-170	04/04/2025	BURATIN	ZIMMITTI	ZIMMITTI
0	FIRST ISSUE	23/10/2024	BURATIN	ZIMMITTI	ZIMMITTI
Rev.	Rev. description	Date	Drawn	Checked	Approved

PROJECTION: EV 12" ASME B16.5 CL 600

MIB ITALIANA S.P.A.
MACCHINE INDUSTRIALI BREVETTATE ITALIA
CASALSERUGO (PADUA) ITALIA
D&E DEPT.

WEIGHT (Kg): 146 ± 5%

© MIB ITALIANA S.P.A. - IT MUST NOT BE COPIED, OR THE CONTENTS THERE OF OR ANY INFORMATION RECEIVED IN CONJUNCTION THEREWITH BE IMPARTED TO ANY 3rd PARTY.

Sheet	Size	Scale	Drwg. No.	Rev.
1 / 1	A2	1:5	EV3760/02	1

MIB®	MIB ITALIANA S.P.A.	DOC No.	DV6100
		Date	04/04/2025
	DESIGN & ENGINEERING DEPT.	Revision	4
	TECHNICAL OFFICE	Issued	BURATIN
	BILL OF MATERIALS	Checked	ZIMMITTI
		Approved	ZIMMITTI

Unit Description	DV 16" RB 12" ASME B16.5 CLASSE 600

Item	Code	Qty.	Description	Material
10	DV6103	1	LOWER VALVE BODY	
				ASTM A350 LF2
				ASTM A479 Tp-316/316L
				ASTM A516 Gr-70
11	DV6102	1	UPPER VALVE BODY	ASTM A350 LF2
20	DV5170	1	SPHERE	
				ASTM A182 F 316
				ASTM A240 Tp-316/316L
21	DV5896	1	SPHERE	
				ASTM A182 F 316
				ASTM A240 Tp-316/316L
30	DV5900	2	LOWER VALVE SHAFT	ASTM A479 S31803
31	DV5899	1	ACTUATOR SHAFT	ASTM A479 S31803
32	DV5177	1	PIVOT PIN	ASTM A479 S31803
50	DV5903	2	CROSS LINKAGE	ASTM A312 Tp-316/316L
51	DV5904	2	CROSS LINKAGE	ASTM A312 Tp-316/316L
80	DV5180	2	SEAT CARRIER	ASTM A182 F 316/316L
101	DV5178	2	EXTENDED BONNET COVER	ASTM A479 S31803
102	DV5179	1	COVER	ASTM A479 S31803
110	DV6105	1	LOWER VALVE ERC FLANGE	ASTM A182 F 316/316L
111	DV6104	1	UPPER VALVE ERC FLANGE	ASTM A182 F 316/316L
120	DV5181	2	SEAT RESTRAINING RING	ASTM A182 F 316/316L
121	DV5182	2	SEAT CARRIER THREADED RING	ASTM A182 F 316/316L
130	DV5184	2	SPHERE SEAT	CABFLUOR 25
140	DV5902	2	LOWER VALVE LEVER	
				ASTM A240 Tp-316/316L
				ASTM A479 Tp-316/316L
150	EV3760/02	1	EV 12" ASME B16.5 CL 600	SEE DRWG. EV3760/02
160	1005611	2	BALL JOINT	STAINLESS STEEL/BRONZE
161	DE0253A	2	UPPER VALVE LEVER PIN	ASTM A479 Tp-316/316L
162	DE0254A	2	LOWER VALVE LEVER PIN	ASTM A479 Tp-316/316L
163	OS0634A	32	SPRINGS SUPPORT PIN	ASTM A479 S31803
180	DV5173	1	EXTENDED BONNET	ASTM A479 S31803
181	DV5901	2	EXTENDED BONNET	ASTM A479 S31803
186	DV5908	1	PROXIMITY SWITCH SUPPORT	ASTM A240 Tp-316/316L
187	DV6106	1	BULKHEAD PLATE	ASTM A240 Tp-316/316L
200	1105817	1	HYDRAULIC ACTUATOR	CARBON STEEL
210	1018412	32	SPLIT PIN	AISI 316
215	1018771	4	BEARING	INCONEL 625/C TX
216	1018774	4	BEARING	INCONEL 625/T TX
217	1018772	3	BEARING	INCONEL 625/C TX
218	1019799	3	BEARING	INCONEL 625/PTFE
220	108089	1	PARALLEL KEY	UNI 7845 C50
235	1100833	2	PROXIMITY SWITCH	PLASTIC
240	DE0381	4	HEX NUT	ASTM A276 Tp-316
241	DE0380	2	HEX NUT	ASTM A276 Tp-316
242	1016939	4	HEX NUT	UNI 7323 A4
245	1009871	8	HEX NUT	UNI 7323 A4
250	1019757	2	SPRING-ENERGIZED LIP SEAL	STAINLESS STEEL/PTFE
254	1019983	3	BACK-UP RING	PTFE
255	104022	3	PACKING	GRAPHITE

	MIB ITALIANA S.P.A.	DOC No.	DV6100
		Date	04/04/2025
	DESIGN & ENGINEERING DEPT.	Revision	4
	TECHNICAL OFFICE	Issued	BURATIN
	BILL OF MATERIALS	Checked	ZIMMITTI
		Approved	ZIMMITTI

Unit Description	DV 16" RB 12" ASME B16.5 CLASSE 600

Item	Code	Qty.	Description	Material
265	DV5185	1	ACTUATOR FIRE PROOF PROTECTION	SEE DRWG. DV5185
270	1018785	256	BELLEVILLE WASHER	ELGILOY
279	1019878	2	ELASTOMERIC O-RING	FKM LT
280	1019873	3	ELASTOMERIC O-RING	ENDURA V91A®
281	1019872	2	O RING	ENDURA V91A®
282	1019874	3	O RING	ENDURA V91A®
283	1019875	4	O RING	ENDURA V91A®
284	1019876	3	O RING	ENDURA V91A®
285	1019877	3	O RING	ENDURA V91A®
290	1019800	2	C-RING	INCONEL 718
291	1011893	4	METAL C-RING	INCONEL 718
300	DE0124A/01	2	VALVE STATUS INDICATOR	ASTM A240 Tp-316
302	113655	2	SPRING WASHER	AISI 316
304	1106066	32	PLAIN WASHER	ASTM A479 S31803
305	1020253	2	WASHER	ASTM A479 Tp-316
309	1019249	4	SPRING WASHER	UNI 7323 A4
310	114606	6	PARALLEL DOWEL PIN	ASTM A479 Tp-XM 19H
311	106363	2	PARALLEL DOWEL PIN	ASTM A479 Tp-316
313	1016862	2	PARALLEL DOWEL PIN	ASTM A479 Tp-316
319	DV6107	4	REASSEMBLY STUD BOLT	UNI 7323 A4
320	107217	60	HEAD CAP SCREW	ASTM A320 B8 Cl-2
321	110226	28	HEAD CAP SCREW	ASTM A320 B8 Cl-2
322	1001566	8	HEAD CAP SCREW	UNI 7323 A4
323	117495	4	HEAD CAP SCREW	ASTM A320 B8 Cl-2
325	1010260	4	HEAD CAP SCREW	ASTM A320 B8M Cl-1
326	DE0252A	2	SPECIAL SCREW	ASTM A276 Tp-316
327	113700	4	HEAD CAP SCREW	UNI 7323 A4
330	116891	2	HEXAGON HEAD SCREW	UNI 7323 A4
331	1001754	32	COUNTERSUNK HEAD CAP SCREW	UNI 7323 A4
333	115964	2	COUNTERSUNK HEAD CAP SCREW	UNI 7323 A4
338	1006746	3	SLOTTED PAN HEAD SCREW	UNI 7323 A4
340	DV1109/02	1	DIRECTIONAL CONTROL VALVE	SEE DRWG. DV1109/02
342	1105864	4	BULKHEAD FITTING	AISI 316
343	108141	2	BULKHEAD FITTING	AISI 316
344	1012687	4	FITTING	AISI 316
345	1105822	2	MALE FITTING	AISI 316
347	1002554	1	RELIEF VALVE	AISI 316
348	109025	1	COVER	PLASTIC
350	1020390	4	ERC SUSPENDING DEVICE	AISI 316
353	1103019	1	PROXIMITY SWITCH PROTECTIVE COVER	STAINLESS STEEL
354	1103015	1	PROXIMITY SWITCH	PLASTIC
355	1103016	1	PROXIMITY SWITCH ACTIVATOR	PLASTIC

	MIB ITALIANA S.P.A.	DOC No.	EV3760/02
		Date	04/04/2025
	DESIGN & ENGINEERING DEPT.	Revision	1
	TECHNICAL OFFICE	Issued	BURATIN
	BILL OF MATERIALS	Checked	ZIMMITTI
		Approved	ZIMMITTI

Unit Description	EV 12" ASME B16.5 CL 600

Item	Code	Qty.	Description	Material
10	EV3762	3	LINK BAR	ASTM A240 S31803
11	EV4364	1	TIE BAR	
				ASTM A240 S31803
				ASTM A479 Tp-XM 19H
34	EV1202	1	BUSHING	ASTM A479 Tp-316
35	1019808	2	BUSHING	EN 1982 - CC333G
40	EV3256/04	1	HYDRAULIC CYLINDER	SEE DRWG. EV3256/04
50	EV4366	1	SPRING PACK COVER	
				ASTM A312 Tp-316
				ASTM A240 Tp-316/316L
65	EV3259/02	1	CYLINDER FIRE PROOF PROTECTION	SEE DRWG. EV3259/02
70	EV4365	1	SPRING RETAINING NUT	
				ASTM A350 LF2
				DIN 2391 St52
80	EV3768/02	1	RELEASE FORK	ASTM A240 Tp-316
90	EV3771	1	ERC TEST LEVER	ASTM A240 Tp-316
100	EV3763	7	ERC CLAMP PIN	ASTM A479 Tp-XM 19H
101	EV3003A	1	PIN	ASTM A479 Tp-316/316L
102	EV1643/01	1	ERC TEST PIN	ASTM A479 Tp-316
103	EV3252A	1	ERC TEST PIN	ASTM A479 Tp-316/316L
104	EV2018	2	SPRING PACK HEAD PIN	ASTM A479 Tp-XM 19H
106	EV3772	1	ERC TEST LEVER PIVOT PIN	ASTM A479 Tp-316
109	EV3774	2	RELEASE FORK PIN	ASTM A479 Tp-XM 19H
120	EV1203	1	PROXIMITY SWITCH TARGET	ASTM A240 Tp-316
130	EV3764/01	1	ERC CLAMP	ASTM A182 F 51
131	EV3761	2	ERC CLAMP	ASTM A182 F 51
132	EV3765	1	ERC CLAMP	ASTM A182 F 51
135	EV3775	1	SHEAR PIN	EN 1982 - CC483K
140	EV3766	1	RELEASE FORK SUPPORT	ASTM A240 Tp-316
141	EV3767	1	RELEASE FORK SUPPORT	ASTM A240 Tp-316
142	DD0243	1	LOCKING BLOCK	ASTM A276 Tp-316
143	EV3776/01	1	PROXIMITY SWITCH SUPPORT	ASTM A240 Tp-316/316L
145	EV3769/01	1	SPRING PACK HEAD	
				ASTM A479 Tp-316/316L
				ASTM A240 Tp-316
146	1020389	1	ERC RESTRAINING WIRE	AISI 316
150	117432	7	BEARING	STAINLESS STEEL/PTFE
151	1019809	2	BEARING	STAINLESS STEEL/PTFE
152	107899	1	BEARING	STAINLESS STEEL/PTFE
153	114987	1	BEARING	STAINLESS STEEL/PTFE
155	EV3396	1	BUSHING	ASTM B438
161	1016847	1	SPLIT PIN	AISI 316
162	1013906	1	SPLIT PIN	AISI 316
163	113387	7	SPLIT PIN	AISI 316
164	1014768	1	R CLIP	AISI 316
165	1014769	2	R CLIP	AISI 316
166	1016846	1	SETSCREW	UNI 7323 A4
167	1103474	1	DIRECTIONAL CONTROL VALVE	STAINLESS STEEL
168	1105804	1	SETSCREW	UNI 7323 A4
169	1016920	4	EYEBOLT	AISI 316
170	1104471	8	BELLEVILLE SPRING	UNI 3545 50CrV4

	MIB ITALIANA S.P.A.	DOC No.	EV3760/02
		Date	04/04/2025
	DESIGN & ENGINEERING DEPT.	Revision	1
	TECHNICAL OFFICE	Issued	BURATIN
	BILL OF MATERIALS	Checked	ZIMMITTI
		Approved	ZIMMITTI

Unit Description	EV 12" ASME B16.5 CL 600

Item	Code	Qty.	Description	Material
180	114986	1	ELASTOMERIC O-RING	NITRILE
181	101790	1	ELASTOMERIC O-RING	NITRILE
190	116986	2	THRUST BEARING	EN 1982 - CC483K
191	112150	2	THRUST BEARING	EN 1982 - CC483K
192	109552	18	THRUST BEARING	EN 1982 - CC483K
200	116991	1	PLAIN WASHER	UNI 7323 A4
201	1018512	1	PLAIN WASHER	ASTM A479 Tp-316/316L
202	114570	7	PLAIN WASHER	ASTM A276 Tp-316
203	1016576	4	PLAIN WASHER	ASTM A479 Tp-316/316L
205	112741	8	PARALLEL DOWEL PIN	ASTM A479 Tp-XM 19H
210	118529	3	HEAD CAP SCREW	UNI 7323 A4
211	115843	4	HEAD CAP SCREW	UNI 7323 A4
212	1016937	6	HEAD CAP SCREW	UNI 7323 A4
213	115911	8	HEAD CAP SCREW	UNI 7323 A4
214	1013741	2	HEAD CAP SCREW	UNI 7323 A4
215	1012021	2	HEAD CAP SCREW	UNI 7323 A4
216	110462	2	HEAD CAP SCREW	UNI 7323 A4
218	1016918	1	SETSCREW	UNI 7323 A4
219	1016919	2	HEX NUT	UNI 7323 A4
235	1100833	1	PROXIMITY SWITCH	PLASTIC
236	1103406	1	PROXIMITY SWITCH	PLASTIC

ANNEX B – HYDRAUILIC CIRCUIT

Notes:
1) All fixed Pipework in the ERS is 316 S/S to ASTM A269 12mm O/D x 1.5 mm wall seamless Tube

2) All Hydraulic Fittings 316 S/S Double Ferrule to suit Metric Tube

3) —·-·— Line indicates Fireproofed Actuators & Hoses

4) All interface ports will be provided with SS 316 plugs

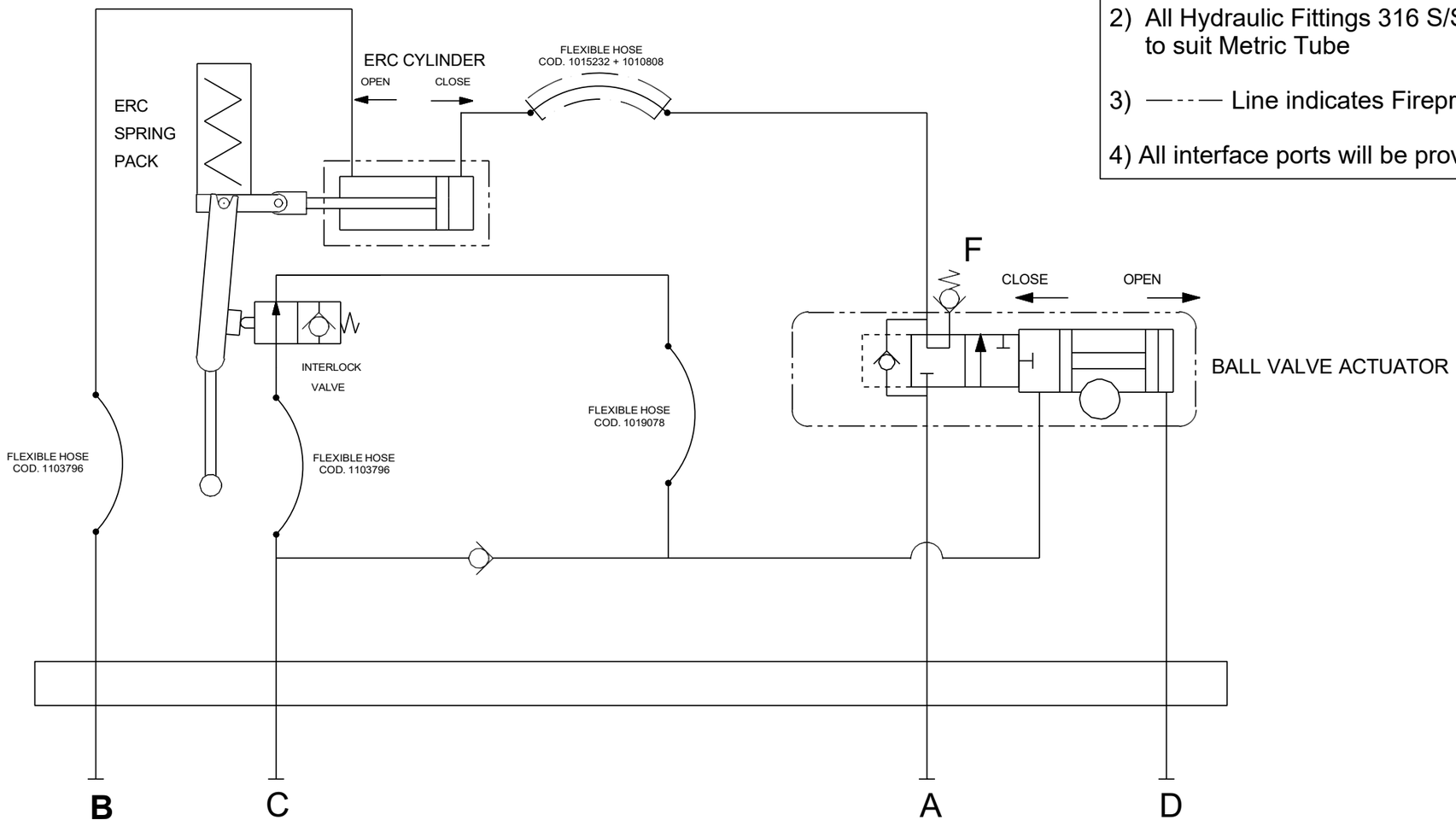

Code	Function	Vol. Litres	Termination	Design Pressure barG	Req'd Pressure barG	Time secs	Flow Rate l/min
F	NUPRO RELIEF VALVE SET @7 barG	---	---	---	---	---	---
D	CLOSE VALVES	0.59	1/2" BSPP F	250	140	5	7.1
C	OPEN VALVES	0.59	1/2" BSPP F	250	140	---	---
B	CLOSE ERC	0.31	1/2" BSPP F	250	140	---	---
A	OPEN ERC	0.37	1/2" BSPP F	250	140	2	11.1

Rev.	Rev. description	Date	Drawn	Checked	Approved
2	AS BUILT	04/04/2025	SCARPARI	ZIMMITTI	ZIMMITTI
1	REMOVED FLOW CONTROL VALVE AND ADDED CHECK VALVE	25/11/2024	BURATIN	ZIMMITTI	ZIMMITTI
0	FIRST ISSUE	06/11/2024	SCARPARI	ZIMMITTI	ZIMMITTI

PROJECTION

HYDRAULIC CIRCUIT

36767 - KANON SUMED HPNG AIN SOKHNA PORT

© MIB ITALIANA S.P.A. - IT MUST NOT BE COPIED, OR THE CONTENTS THERE OF OR ANY INFORMATION RECEIVED IN CONJUNCTION THEREWITH BE IMPARTED TO ANY 3rd PARTY.

Sheet	Size	Scale
1/1	A3	NA

MIB ITALIANA S.P.A.
MACCHINE INDUSTRIALI BREVETTATE ITALIA
CASALSERUGO (PADUA) ITALY
D&E DEPT.

Drwg. No. HC36767

Rev. 2

ANNEX C

PROXIMITY SWITCHES DATASHEETS

Inductive sensor

NJ2-12GK-SN-10M

- 2 mm flush
- Usable up to SIL 3 acc. to IEC 61508
- ATEX approval Ex-i and Ex-nA/tc for zone 0-2 and zone 20-22
- Degree of protection IP68

Dimensions

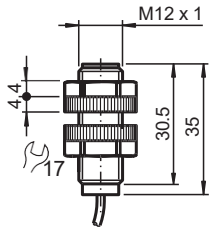

Technical Data

General specifications		
Switching function		Normally closed (NC)
Output type		NAMUR with safety function
Rated operating distance	s_n	2 mm
Installation		flush
Assured operating distance	s_a	0.....1.62 mm
Reduction factor r_{Al}		0.4
Reduction factor r_{Cu}		0.3
Reduction factor r_{304}		0.85
Safety Integrity Level (SIL)		up to SIL3 acc. to IEC 61508 **Danger!** In safety-related applications the sensor must be operated with a qualified fail safe interface from Pepperl+Fuchs, such as KFD2-SH-EX1. Consider the "exida Functional Safety Assessment" document which is available on www.pepperl-fuchs.com as an integral part of this product's documentation.
Output type		2-wire
Nominal ratings		
Nominal voltage	U_o	8.2 V (R_i approx. 1 kΩ)
Switching frequency	f	0 ... 2000 Hz
Suitable for 2:1 technology		yes , with reverse polarity protection diode

Release date: 2020-12-15 Date of issue: 2020-12-15 Filename: 250926_eng.pdf

Technical Data

Current consumption	
Measuring plate not detected	≥ 3 mA
Measuring plate detected	≤ 1 mA
Functional safety related parameters	
Safety Integrity Level (SIL)	SIL 3
$MTTF_d$	10660 a
Mission Time (T_M)	20 a
Diagnostic Coverage (DC)	0 %
Compliance with standards and directives	
Standard conformity	
NAMUR	EN 60947-5-6:2000 IEC 60947-5-6:1999
Standards	EN 60947-5-2:2007 EN 60947-5-2/A1:2012 IEC 60947-5-2:2007 IEC 60947-5-2 AMD 1:2012
Approvals and certificates	
IECEx approval	
Equipment protection level Ga	IECEx PTB 11.0092X
Equipment protection level Gb	IECEx PTB 11.0092X
Equipment protection level Da	IECEx PTB 11.0092X
Equipment protection level Mb	IECEx PTB 11.0092X
ATEX approval	
Equipment protection level Ga	PTB 00 ATEX 2049 X
Equipment protection level Gb	PTB 00 ATEX 2049 X
Equipment protection level Gc (nA)	PF15CERT3754X
Equipment protection level Da	PTB 00 ATEX 2049 X
Equipment protection level Dc (tc)	PF15CERT3774X
EAC conformity	TR CU 012/2011
FM approval	
Control drawing	116-0165
UL approval	cULus Listed, General Purpose
Ordinary Location	E87056
Hazardous Location	E501628
Control drawing	116-0454
CCC approval	
Hazardous Location	2020322315002308
NEPSI approval	
NEPSI certificate	GYJ16.1392X
Ambient conditions	
Ambient temperature	-40 ... 100 °C (-40 ... 212 °F)
Mechanical specifications	
Connection type	cable silicone , 10 m
Core cross-section	0.34 mm^2
Housing material	Crastin (PBT), black
Sensing face	Crastin (PBT), black
Degree of protection	IP68
Cable	
Cable diameter	4.8 mm ± 0.2 mm
Bending radius	> 10 x cable diameter
General information	
Use in the hazardous area	see instruction manuals

Release date: 2020-12-15 Date of issue: 2020-12-15 Filename: 250926_eng.pdf

Connection

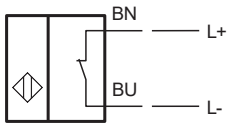

Accessories

	BF 12	Mounting flange, 12 mm
	EXG-12	Quick mounting bracket with dead stop

Release date: 2020-12-15 Date of issue: 2020-12-15 Filename: 250926_eng.pdf

Application

Danger!
In safety-related applications the sensor must be operated with a qualified fail safe interface from Pepperl+Fuchs, such as KFD2-SH-EX1.
Consider the "exida Functional Safety Assessment" document which is available on www.pepperl-fuchs.com as an integral part of this product's documentation.

Release date: 2020-12-15 Date of issue: 2020-12-15 Filename: 250926_eng.pdf

Sensore induttivo

NCN3-F31K2M-N4-B13-S

- Montaggio diretto su motore standard
- Certificazioni ATEX &IECEX
- Applicabile fino a SIL 2 secondo IEC 61508
- Contenitore resistente alle intemperie per applicazioni all'aperto
- Resistente base in metallo
- LED per stato di commutazione del sensore e dell'elettrovalvola
- Terminali plug-in
- Campo di temperatura
  -40 ... 100 °C (-40 ... 212 °F)

Dimensioni

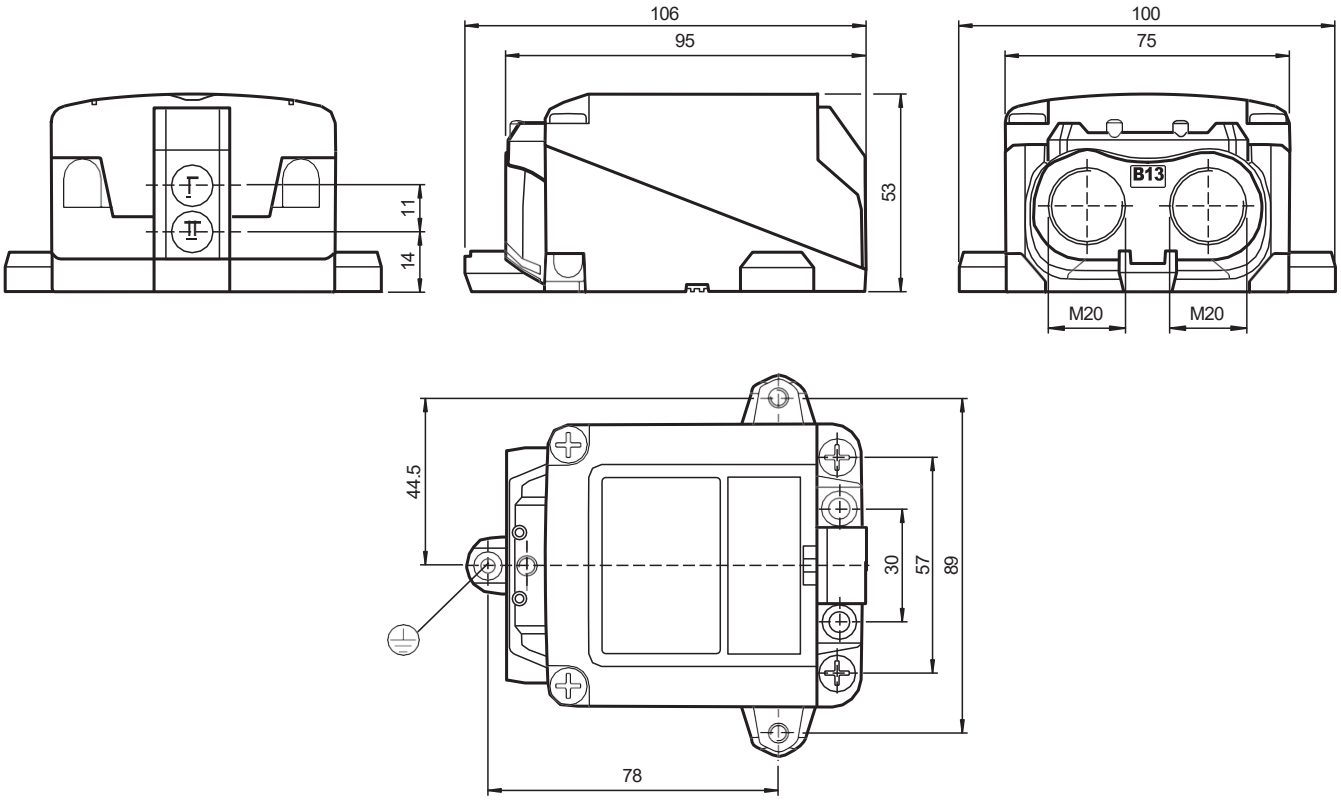

Dati tecnici

Dati generali	
Funzione di commutazione	2 x normalmente chiusi (NC)

Data di edizione: 2020-06-18 Data di stampare: 2020-06-24 : 235080_ita.pdf

Dati tecnici

Tipo di uscita		NAMUR
Distanza di comando misura	s_n	3 mm
Montaggio incorporato		montaggio incorporabile
Distanza di comando sicura	s_a	0 ... 2,4 mm Per la distanza operativa garantita s_{ar} vedere il Manuale di sicurezza funzionale.
Distanza comando reale	s_r	2,7 ... 3,3 mm tipico
Elemento di comando		Acciaio inox 1.4305 / AISI 303 8,5 mm x 8,5 mm x 0,5 mm
Fattore di riduzione r_{Al}		0,4
Fattore di riduzione r_{Cu}		0,4
Fattore di riduzione $r_{1.4301}$		0,7
Fattore di riduzione r_{St37}		1
Fattore di riduzione r_{Ms}		0,5
Tipo di uscita		2-fili
Dati specifici		
Tensione nominale	U_o	8 V
Frequenza di commutazione	f	0 ... 3 kHz
Isteresi	H	tipico 5 %
Protezione da scambio di polarità		polarità protetta
Protezione da cortocircuito		sì
Adatto per tecnologia 2:1		sì , Diodo di protezione contro la polarità inversa non necessario
Consumo corrente		
Lastra di misura non rilevata		≥ 3 mA
Lastra di misura rilevata		≤ 1 mA
Ritardo di disponibilità	t_v	≤ 1 ms
Display stato elettrico		LED, giallo
Indicatore stato valvola		LED, giallo
Parametri Functional Safety		
Livello d'integrazione sicurezza (SIL)		SIL 2
$MTTF_d$		1730 a
Durata del'utilizzo (T_M)		20 a
Grado di copertura della diagnosi (DC)		0 %
Circuito con valvola		
Tensione		max. 32 V DC
Corrente		max. 240 mA
Protezione da cortocircuito		no
Protezione da scambio di polarità		sì, con LED a uscita invertita non funziona, quindi c'è più potenza per l'elettrovalvola
Conformità agli standard e alle direttive		
Standard di conformità		
NAMUR		EN 60947-5-6:2000 IEC 60947-5-6:1999
Compatibilità elettromagnetica		NE 21:2007
Norme		EN 60947-5-2:2007 EN 60947-5-2/A1:2012 IEC 60947-5-2:2007 IEC 60947-5-2 AMD 1:2012
Omologazioni e certificati		
omologazione UL		cULus Listed, General Purpose, Class 2 Power Source
Ordinary Location		E87056
Zona pericolosa		E501628
Control Drawing		116-0455
Omologazione CCC		I prodotti con tensione di esercizio ≤36 V non sono soggetti al regime di autorizzazione e pertanto non sono provvisti di marcatura CCC.
Condizioni ambientali		
Temperatura ambiente		-40 ... 100 °C (-40 ... 212 °F)
Temperatura di stoccaggio		-40 ... 100 °C (-40 ... 212 °F)

Data di edizione: 2020-06-18 Data di stampare: 2020-06-24 : 235080_ita.pdf

Dati tecnici

Dati meccanici		
Collegamento (lato sistema)		Morsetti a vite, coppia di serraggio min. 0,5 Nm Lunghezza senza isolamento: 7 mm , M20 x 1,5
Sezione conduttori (lato sistema)		Versione rigida: 0,14 ... 2,5 mm² Versione flessibile: 0,14 ... 1,5 mm² Versione flessibile con terminale a bussola: 0,25 ... 1,5 mm²
Collegamento (lato valvola)		come per collegamento (lato sistema)
Sezione conduttori (lato valvola)		come per sezione fili (lato sistema)
Materiale della scatola		PC (Macrolon, rinforzato con fibre di vetro)
Parte inferiore della scatola		Alluminio, verniciato a polvere
Grado di protezione		IP66 / IP68 / IP69
Coppia di serraggio viti custodia		≤ 2 Nm
Pressa cavo viti di fissaggio		M20 x 1,5 ; max. 11 Nm
Coppia di serraggio per tappo di chiusura		1 Nm
Indicazione		Disinserzione LED
Informazioni generali		
Uso en área Ex:		vedere le istruzioni per l'uso

Collegamento

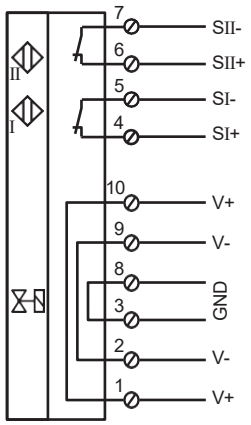

Informazioni aggiuntive

Disinserzione LED
In caso di inversione di polarità delle connessioni del/dei circuito/i della/e valvola/e, l'indicatore di stato della/e valvola/e non funzionerà, vale a dire quindi che sono collegabili anche valvole a bassa tensione.

Data di edizione: 2020-06-18 Data di stampare: 2020-06-24 : 235080_ita.pdf

Componenti di sistema di corrispondenza

	BT115A	Attuatore per la serie F31
	BT115X	Attuatore per la serie F31

Accessori

	BT65-F31K2-RG-EN-01	Attivatore per serie F31K2 con custodia protettiva
	SH-F31K2-B13	Cappuccio protettivo per il montaggio protetto meccanicamente
	SH-BT65-F31K2-01	Custodia protettiva per attivatore BT65-F31K2-RG-EN-01

Data di edizione: 2020-06-18 Data di stampare: 2020-06-24 : 235080_ita.pdf

Inductive sensor

NJ5-18GK-SN-10M

- 5 mm flush
- Usable up to SIL 3 acc. to IEC 61508
- Degree of protection IP68
- ATEX-/IECEx-approvals for zone 0/1/20/21 (Ex i)
- ATEX-/IECEx-approvals for zone 2/22 (Ex ec/tc)

Dimensions

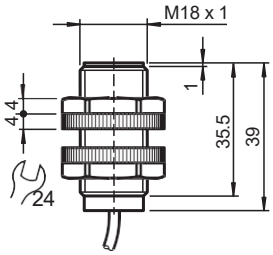

Technical Data

General specifications		
Switching function		Normally closed (NC)
Output type		NAMUR with safety function
Rated operating distance	s_n	5 mm
Installation		flush
Assured operating distance	s_a	0.....4.05 mm
Reduction factor r_{Al}		0.4
Reduction factor r_{Cu}		0.3
Reduction factor r_{304}		0.85
Safety Integrity Level (SIL)		up to SIL3 acc. to IEC 61508 **Danger!** In safety-related applications the sensor must be operated with a qualified fail safe interface from Pepperl+Fuchs, such as KFD2-SH-EX1. Consider the "exida Functional Safety Assessment" document which is available on www.pepperl-fuchs.com as an integral part of this product's documentation.
Output type		2-wire
Nominal ratings		
Nominal voltage	U_o	8.2 V (R_i approx. 1 kΩ)
Switching frequency	f	0 ... 500 Hz
Current consumption		

Release date: 2023-01-27 Date of issue: 2023-01-27 Filename: 70133172_eng.pdf

Technical Data

Measuring plate not detected		≥ 3 mA
Measuring plate detected		≤ 1 mA
Functional safety related parameters		
Safety Integrity Level (SIL)		SIL 3
$MTTF_d$		11850 a
Mission Time (T_M)		20 a
Diagnostic Coverage (DC)		0 %
Compliance with standards and directives		
Standard conformity		
NAMUR		EN 60947-5-6:2000 IEC 60947-5-6:1999
Standards		EN 60947-5-2:2007 EN 60947-5-2/A1:2012 IEC 60947-5-2:2007 IEC 60947-5-2 AMD 1:2012
Approvals and certificates		
IECEx approval		
Equipment protection level Ga		IECEx PTB 11.0092X
Equipment protection level Gb		IECEx PTB 11.0092X
Equipment protection level Gc (ec)		IECEx TUR 21.0017X
Equipment protection level Da		IECEx PTB 11.0092X
Equipment protection level Dc (tc)		IECEx TUR 21.0018X
Equipment protection level Mb		IECEx PTB 11.0092X
ATEX approval		
Equipment protection level Ga		PTB 00 ATEX 2049 X
Equipment protection level Gb		PTB 00 ATEX 2049 X
Equipment protection level Gc (ec)		TÜV 20 ATEX 8523 X
Equipment protection level Da		PTB 00 ATEX 2049 X
Equipment protection level Dc (tc)		TÜV 20 ATEX 8524 X
UL approval		cULus Listed, General Purpose
Ordinary Location		E87056
Hazardous Location		E501628
Control drawing		116-0454
CCC approval		
Hazardous Location		2020322315002308
NEPSI approval		
NEPSI certificate		GYJ16.1392X
Ambient conditions		
Ambient temperature		-40 ... 100 °C (-40 ... 212 °F)
Mechanical specifications		
Connection type		cable
Housing material		Crastin (PBT), black
Sensing face		Crastin (PBT), black
Degree of protection		IP68
Cable		
Cable diameter		6 mm ± 0.2 mm
Bending radius		> 10 x cable diameter
Material		silicone
Core cross section		0.75 mm^2
Length	L	10 m
General information		
Use in the hazardous area		see instruction manuals

Release date: 2023-01-27 Date of issue: 2023-01-27 Filename: 70133172_eng.pdf

Connection

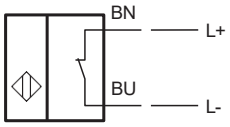

Release date: 2023-01-27 Date of issue: 2023-01-27 Filename: 70133172_eng.pdf

Application

Danger!
In safety-related applications the sensor must be operated with a qualified fail safe interface from Pepperl+Fuchs, such as KFD2-SH-EX1.
Consider the "exida Functional Safety Assessment" document which is available on www.pepperl-fuchs.com as an integral part of this product's documentation.

Release date: 2023-01-27 Date of issue: 2023-01-27 Filename: 70133172_eng.pdf

Installation of an ERC before or after arrival of the FSRU

Kanon reference
015-006-005-00
15-07-2025

Make sure the product pipe is depressurized, empty and flushed.
(002-006-037-00 purging and flushing CNG loading arm)

Connect the QCDC to the dummy or to the ship's flange according to procedure 014-999-004-00 “Connecting CNG 270 to QCDC” in section 4.

KANON LOADING EQUIPMENT

Installation of an ERC before or after arrival of the FSRU

Kanon reference
015-006-005-00
15-07-2025

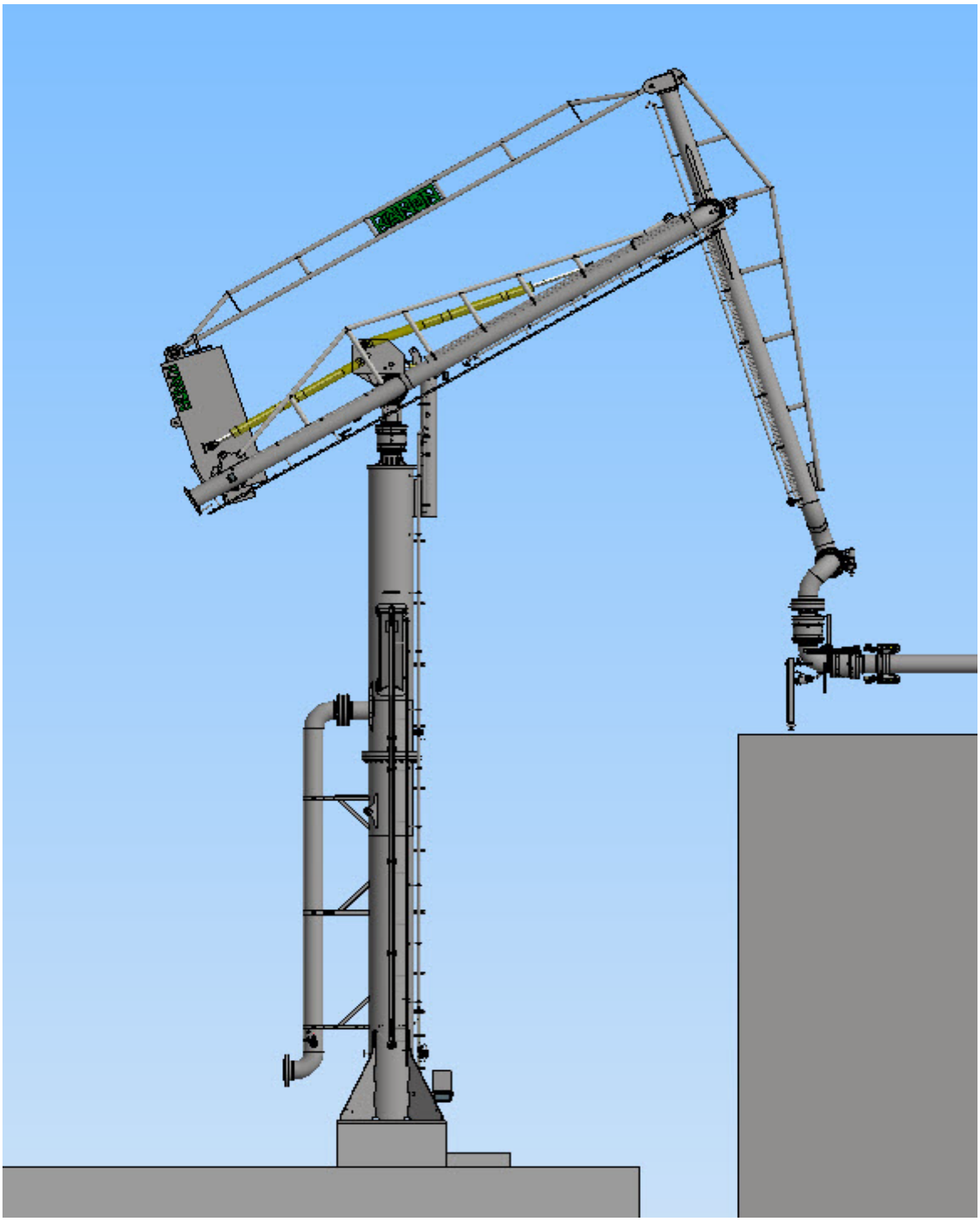

Install the support leg according to procedure 002-003-015-00 “support leg” in section 3. This relieves the flanges and stabilizes the QCDC in this situation.

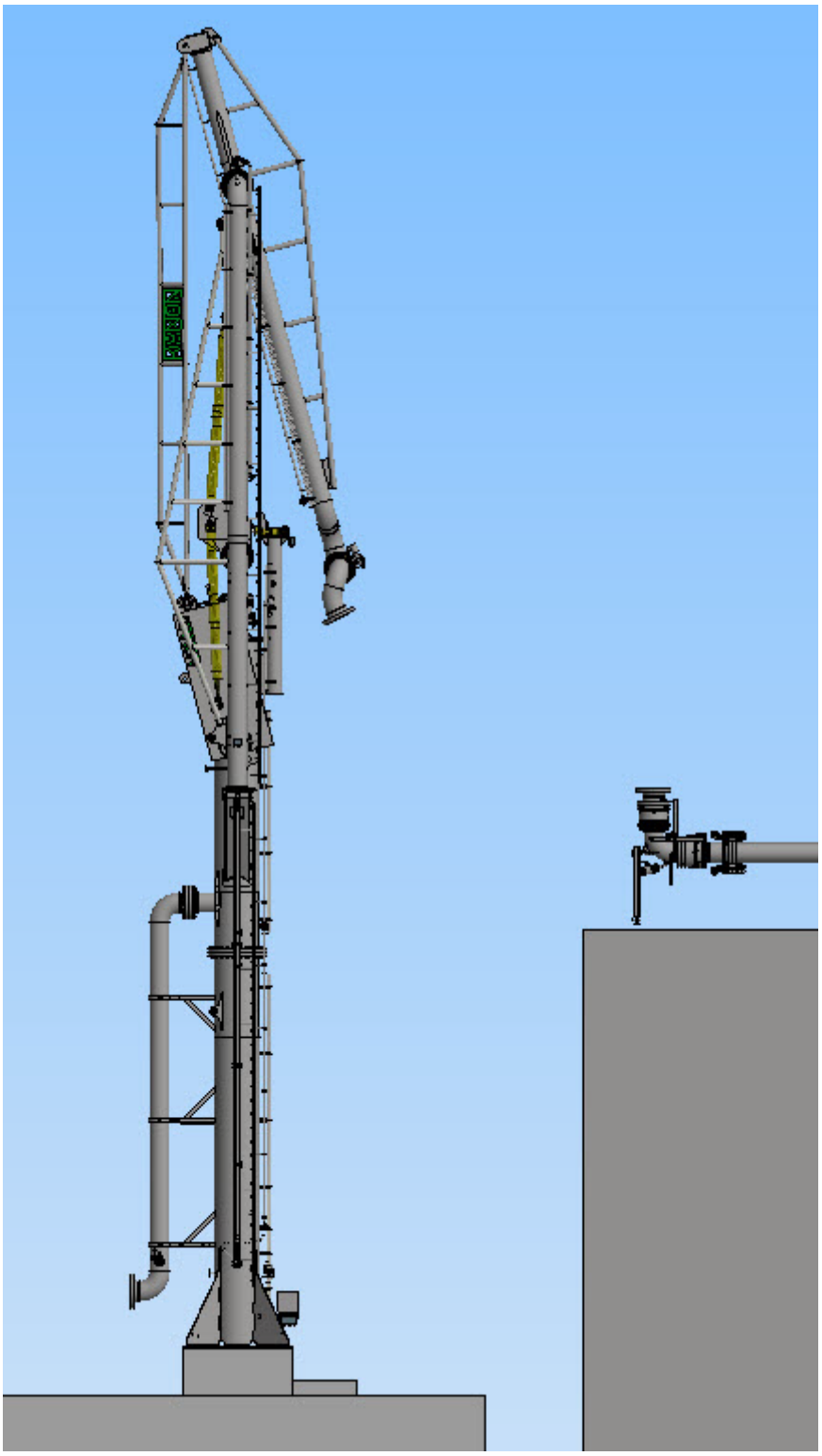

Remove the top separating flange from the triple.

KANON LOADING EQUIPMENT

Installation of an ERC before or after arrival of the FSRU

Kanon reference
015-006-005-00
15-07-2025

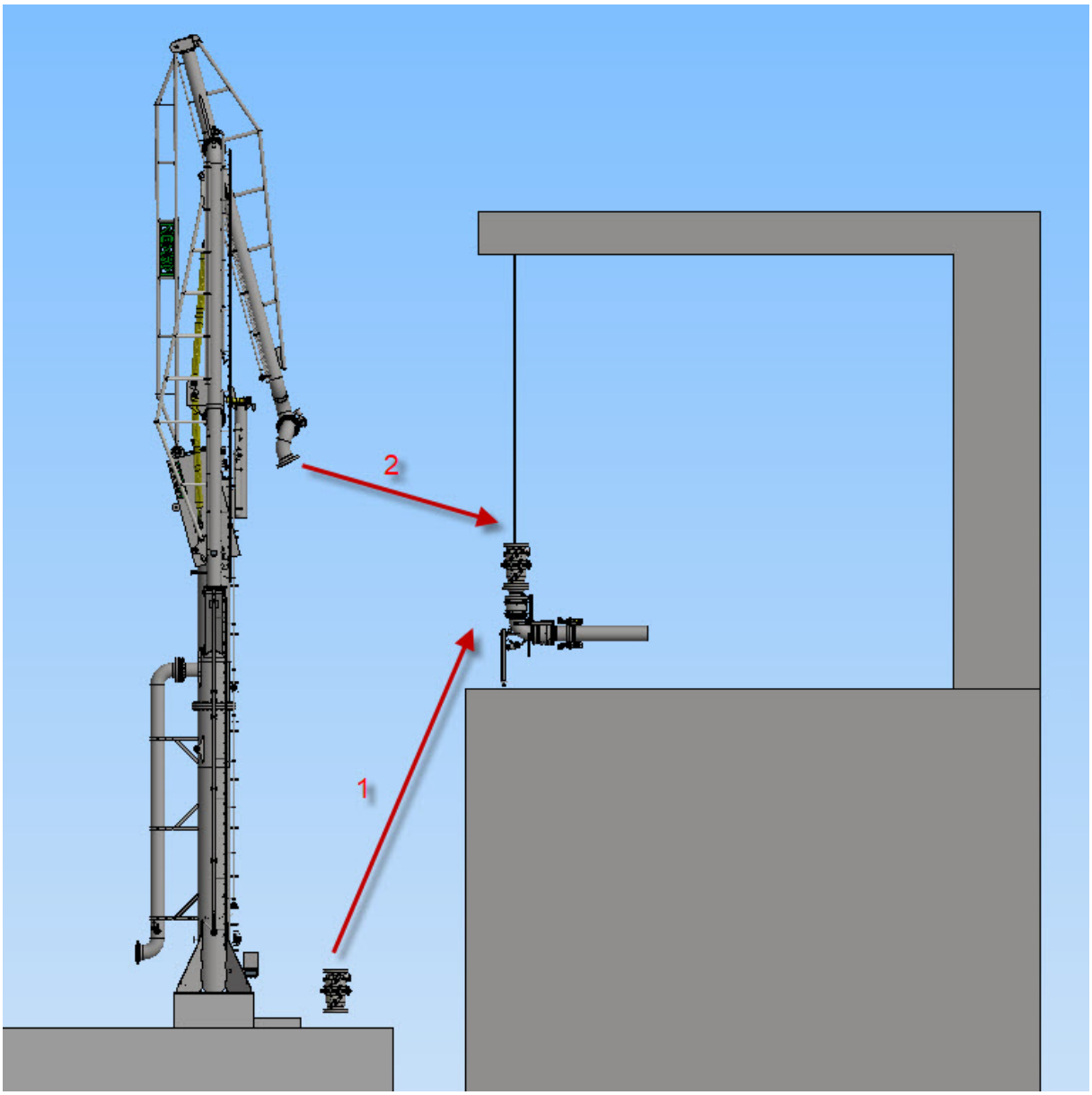

Placing the ERC using the ship's crane.

Pick up the ERC with the crane and place it on the QCDC. Fit new gaskets.

If there is no FSRU.

By placing the MLA in the maintenance position, the ERC can also be connected while it is on the jetty. The lower section of the triple can be connected to a dummy or placed on the jetty and

supported by a stack of pallets

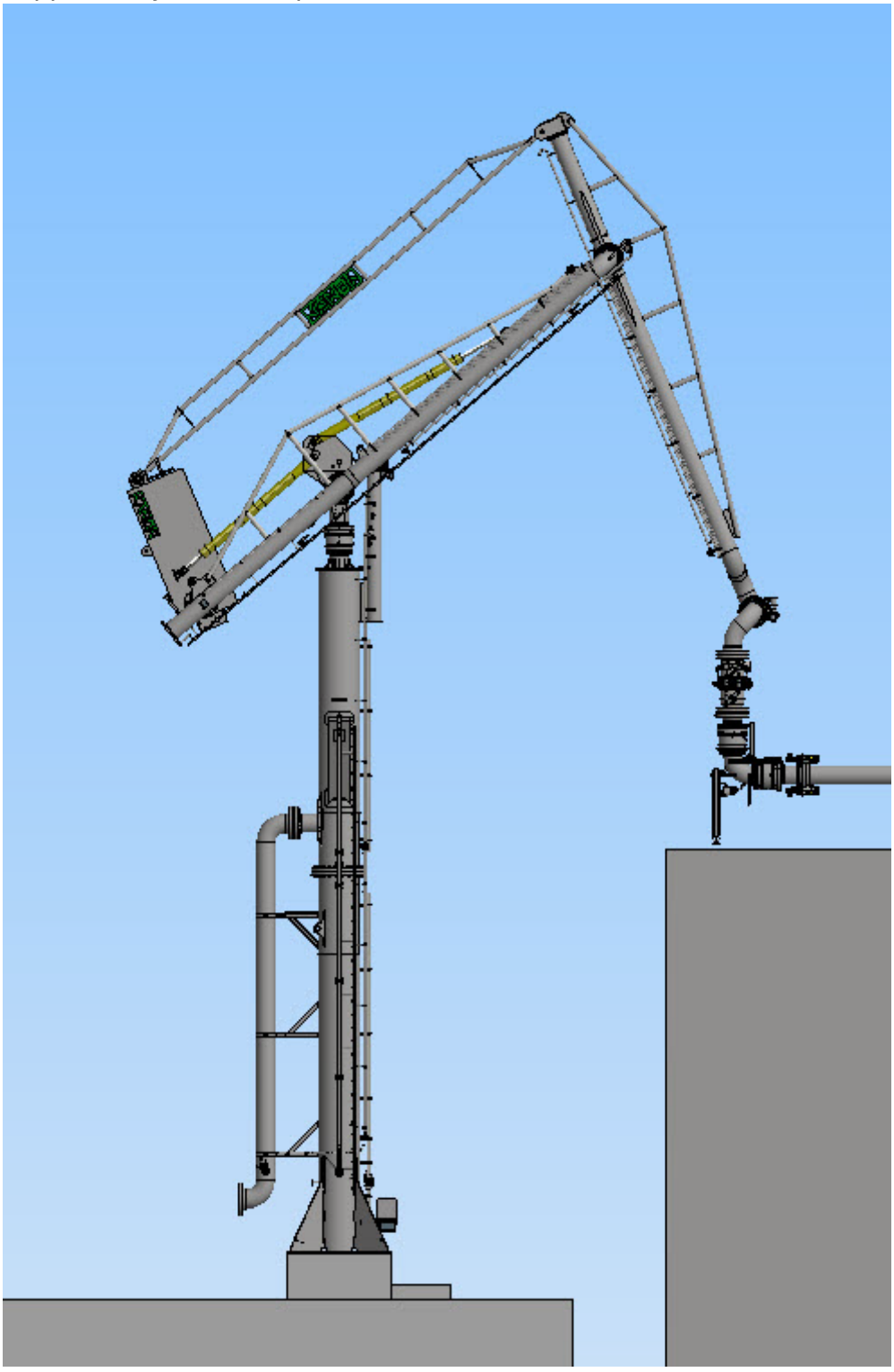

Reconnect the QCDC to the MLA

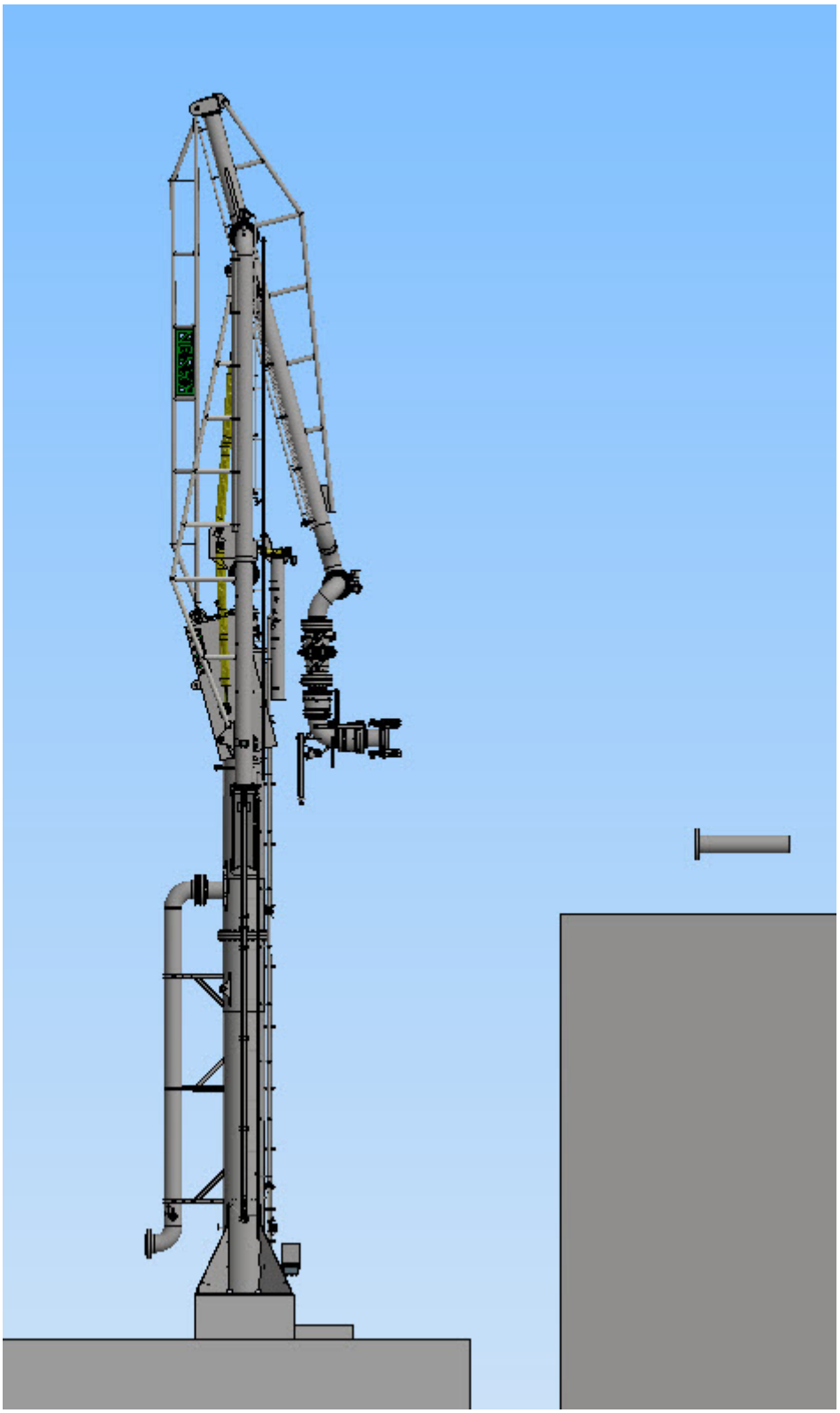

Place the MLA back in the rest position.

EQUIPMENT: **ATTREZZATURA:**	DV 16” RB 12” ASME B16.5 CLASS 600
PRODUCTS: **PRODOTTO:**	HIGH PRESSURE NATURAL GAS
DRAWING No: **DISEGNO N°:**	DV6100
CUSTOMER: **CLIENTE:**	KANON LOADING EQUIPMENT B.V.
PROJECT NAME: **PROGETTO:**	SUMED HPNG AIN SOKHNA PORT
MIB PROJECT REF.: **RIFERIMENTO MIB:**	2024-ON497 / 36767
CUSTOMER REF.: **RIF.TO CLIENTE:**	PO B242384 DATED 23.09.2024
SERIAL Nr.: **N° DI MATRICOLA:**	AA1677 ÷ AA1678

0	06.11.24	MHS	RK	SM	FIRST ISSUE
Rev.	Date	Issued	Checked	Approved	Description

Issued by:	Checked by:	Approved by:
Name: M. Scarpari	Name: R. Kröss	Name: M. Salizzato
Date: 06.11.2024	Date: 06.11.2024	Date: 06.11.2024

TABLE OF CONTENTS / INDICE

1. INTRODUCTION / *INTRODUZIONE* **3**

2. HYDROSTATIC BODY TEST OF THE ERS FULLY ASSEMBLED/ *COLLAUDO IDROSTATICO DELL'UNITÀ ERS COMPLETAMENTE ASSEMBLATA.* **5**

3. HYDROSTATIC SEAT TEST AT AMBIENT TEMPERATURE / *COLLAUDO IDROSTATICO DEL SEGGIO A TEMPERATURA AMBIENTE* **6**

4. PNEUMATIC SEAT TEST / *COLLAUDO PNEUMATICO DEL SEGGIO* **7**

FIGURE 1 – PNEUMATIC SEAT TEST **8**

5. AMBIENT FUNCTION TEST / *COLLAUDO FUNZIONALE* **9**

FIGURE 2 – ERC IN ROUTINE TESTING MODE **11**

FIGURE 3 – ERC IN OPERATING MODE **12**

6. HYDRAULIC SYSTEM PRESSURE TEST / *COLLAUDO IN PRESSIONE DEL SISTEMA IDRAULICO* **13**

HYDRAULIC CIRCUIT DIAGRAM……..……**HC36767**

1. INTRODUCTION / *INTRODUZIONE*

A. Please refer to Table 1 for details of the test parameters for the unit.

B. Testing will be performed after welding of loading arm manufacturers components to the ball valve bodies.

C. Testing will be performed after full assembly and painting of ERS.

D. For pressure testing, the termination flanges will be fitted with suitable blanking flanges.

E. The blanking flanges will be fitted with the necessary fill, drain vent and pressure connections.

F. The system pressures will be monitored by standard calibrated pressure gauges.

G. Test fluid will be removed and the units dried following testing.

H. The hydraulic system will remain full of hydraulic oil following testing.

I. All testing is potentially hazardous and the following rules shall be considered:

- **Safety instructions given by MIB managers and safety notices displayed in MIB Italiana S.P.A. are mandatory.**
- **Never approach the equipment without the prior agreement of the MIB supervisor.**
- **Use the available personnel protection equipment (PPE) in accordance with the instructions given.**

J. The sequence in which the tests are listed in this document does not necessarily represent the sequence of the actual tests. The actual sequence will be determined by the MIB test supervisor based on the availability of test equipment.

A. Per i dettagli sui parametri di collaudo della/delle unità fare riferimento alla Tabella 1.

B. Il collaudo verrà eseguito dopo la saldatura delle parti del braccista ai corpi delle valvole.

C. Il collaudo verrà eseguito dopo l'assemblaggio e la pitturazione dell'ERS.

D. Per il collaudo in pressione, saranno assemblate flange cieche adatte alle terminazioni dell'unità.

E. Le flange cieche saranno equipaggiate con i necessari dispositivi per il collaudo (sfiati, connessioni, linee di drenaggio).

F. La pressione di collaudo verrà monitorata per mezzo di manometri standard calibrati.

G. Al termine del collaudo il fluido di collaudo verrà rimosso e l'unità verrà asciugata.

H. Al termine del collaudo il sistema idraulico rimarrà pieno di olio idraulico.

I. Tutte le fasi di collaudo sono potenzialmente pericolose e le seguenti regole devono essere rispettate:

- ***Le istruzioni di sicurezza fornite dalla Direzione MIB e gli avvisi di sicurezza segnalati in MIB Italiana SPA sono obbligatorie***
- ***Non avvicinarsi mai all'apparecchiatura senza aver prima ricevuto l'approvazione da parte del supervisore MIB.***
- ***Utilizzare l'equipaggiamento a disposizione per la protezione del personale (DPI) in accordo alle istruzioni fornite.***

J. La sequenza in cui sono disposte le tipologie di collaudo in questo documento non rappresenta necessariamente la sequenza effettiva dei test, che verrà decisa dal supervisore MIB sulla base della disponibilità delle attrezzature.

TABLE 1 - ERS DATA SHEET / *SCHEDA TECNICA ERS*

NUMBER OF UNITS / *NUMERO DI UNITA'*	2
UNIT SIZE / *DIMENSIONE UNITA'*	16" RB 12"

DESIGN PRESSURE / *PRESSIONE DI PROGETTO*	77 barg
DESIGN TEMPERATURE / *TEMPERATURA DI PROGETTO*	-29°C ≤ T ≤ +50°C
DESIGN BENDING MOMENT / *MOMENTO FLETTENTE DI PROGETTO*	3500 daNm
DESIGN SHEAR LOAD / *CARICO DI TAGLIO DI PROGETTO*	1500 daN
DESIGN AXIAL LOAD / *CARICO ASSIALE DI PROGETTO*	5000 daN
VALVES CLOSURE TIME / *TEMPO DI CHIUSURA VALVOLE*	5 to 30 seconds
RELEASE TIME / *TEMPO DI SCONNESSIONE*	≤ 2 seconds
HYDRAULIC DESIGN PRESSURE / *PRESSIONE IDRAULICA DI PROGETTO*	250 barg
HYDRAULIC TEST PRESSURE / *PRESSIONE IDRAULICA DI COLLAUDO*	375 barg
MINIMUM AVAILABLE PRESSURE TO OPERATE THE ERS / *MINIMA PRESSIONE IDRAULICA DISPONIBILE*	140 barg

2. HYDROSTATIC BODY TEST OF THE ERS FULLY ASSEMBLED/ *COLLAUDO IDROSTATICO DELL'UNITÀ ERS COMPLETAMENTE ASSEMBLATA.*

TEST PRESSURE / *PRESSIONE DI COLLAUDO*	115.5 barg
TEST TEMPERATURE / *TEMPERATURA DI COLLAUDO*	Ambient
DURATION / *DURATA*	30 minutes
TEST FLUID / *FLUIDO DI COLLAUDO*	Alcohol

Number of units to be tested: All units.

A. This test will be undertaken on completion of fabrication and assembly of the complete ERS.

B. Suitable blanking flanges will be fitted to the interfaces of the ERS and the vent line termination will be suitably plugged.

C. The ERS will be filled with the test fluid at ambient temperature and pressurised to the test pressure detailed above.

D. The pressure will be maintained for the test period detailed and the unit visually inspected for leakage.

Note: The starting time for the test period will be selected by MIB, after a period of stabilisation, of pressure and temperature.

E. On completion of the test, the pressure will be released and the test fluid drained from the unit.

Unità da collaudare: tutte le unità.

A. Questo test sarà eseguito al completamento della fabbricazione ed assemblaggio completo dell'unità.

B. Alle terminazioni dell'unità saranno collegate due flange cieche idonee all'utilizzo previsto e la terminazione della linea di venting sarà opportunamente tappata.

C. L'unità sarà riempito con il fluido di collaudo a temperatura ambiente e pressurizzata alla pressione di prova indicata qui sopra.

D. La pressione sarà mantenuta per il tempo di collaudo indicato e durante tale periodo l'unità sarà ispezionata per verificare l'eventuale presenza di perdite.

Nota: *il momento di inizio del tempo di collaudo sarà stabilito dalla MIB, dopo un periodo di stabilizzazione di pressione e temperatura.*

E. *Al termine del test, la pressione sarà riportata alla pressione ambiente e il fluido di collaudo sarà rimosso dall'unità.*

ACCEPTANCE CRITERIA

1. There shall be no visible leakage over the duration of the test period in step D.
2. The pressure shall not fall below the hydrostatic test pressure during the test period in step D.
3. Minor variations in pressure are acceptable provided that these can be directly related to equivalent changes in temperature.
4. If the pressure should fall below the hydrostatic test pressure due to temperature influence, then a new test will be performed in a more favourable temperature situation.

CRITERI DI ACCETTAZIONE

1. Al punto D non ci dovranno essere perdite visibili durante il tempo di collaudo.

2. Al punto D la pressione non dovrà scendere al di sotto della pressione idrostatica di collaudo durante il tempo di collaudo.

3. Saranno accettabili minime variazioni di pressione se queste potranno essere direttamente riconducibili ad equivalenti variazioni di temperatura.

4. In caso di calo della pressione al di sotto della pressione idrostatica di collaudo a causa della variazione di temperatura, allora dovrà essere eseguito un nuovo test in condizioni di temperatura più favorevoli.

3. HYDROSTATIC SEAT TEST AT AMBIENT TEMPERATURE / *COLLAUDO IDROSTATICO DEL SEGGIO A TEMPERATURA AMBIENTE*

TEST PRESSURE / *PRESSIONE DI COLLAUDO*	85 barg
TEST TEMPERATURE / *TEMPERATURA DI COLLAUDO*	Ambient
DURATION / *DURATA*	5 minutes
TEST FLUID / *FLUIDO DI COLLAUDO*	Alcohol

Number of units to be tested: All units.

A. The upper and lower halves will be fitted with a blanking plate at the flanged end side and the ball valve fully closed. The vent line termination on the upper valve will be suitably plugged

B. Each half of the ERS unit will be filled with the test fluid detailed above at ambient temperature. The seat area will then be wiped dry.

C. With the seat assembly of each valve uppermost, the valve will be pressurised to the test pressure detailed

D. The pressure will be maintained for the test period indicated and the unit checked for leakage in the area of the seat assembly.

E. On completion of the test, the pressure will be released and the test fluid will be drained from the unit.

Unità da collaudare: tutte le unità.

A. Alle terminazioni flangiate delle unità verranno collegate flange cieche idonee all'utilizzo previsto. Le valvole a sfera dovranno essere chiuse. La terminazione della linea di sfiato della valvola superiore sarà opportunamente tappata.

B. Ciascuna delle due metà della unità ERS sarà riempita con il fluido di collaudo sopra indicato a temperatura ambiente. La zona del seggio sarà successivamente asciugata.

C. Ciascuna valvola, posizionata con il seggio rivolto verso l'alto, sarà pressurizzata alla pressione di prova indicata.

D. La pressione sarà mantenuta per il tempo di collaudo e durante tale periodo l'unità sarà ispezionata per verificare l'eventuale presenza di perdite.

E. Al termine del test, la pressione sarà riportata alla pressione ambiente e il fluido di collaudo verrà rimosso dall'unità.

ACCEPTANCE CRITERIA (BALL VALVES)

1. There shall be no visible leakage over the duration of the test period in step D.

2. The pressure shall not fall below the hydrostatic seat test pressure during the test period in step D.

3. Minor variations in pressure are acceptable provided that these can be directly related to equivalent changes in temperature.

4. If the pressure should fall below the hydrostatic seat test pressure due to temperature influence then a new test will be performed in a more favourable temperature situation.

CRITERI DI ACCETTAZIONE(VALVOLE A SFERA)

1. Al punto D non ci dovranno essere perdite visibili durante il tempo di collaudo.

2. Al punto D la pressione non dovrà scendere al di sotto della pressione idrostatica di collaudo durante il tempo di collaudo.

3. Saranno accettabili minime variazioni di pressione se queste possono essere direttamente riconducibili ad equivalenti variazioni di temperatura.

4. Se la pressione dovesse scendere al di sotto della pressione idrostatica di collaudo a causa della variazione di temperatura, allora dovrà essere eseguito un nuovo test in condizioni di temperatura più favorevoli.

4. PNEUMATIC SEAT TEST / *COLLAUDO PNEUMATICO DEL SEGGIO*

TEST PRESSURE / *PRESSIONE DI COLLAUDO*	6 barg
TEST TEMPERATURE / *TEMPERATURA DI COLLAUDO*	Ambient
DURATION / *DURATA*	5 minutes
TEST FLUID / *FLUIDO DI COLLAUDO*	Nitrogen or dried air

Number of units to be tested: All units

A. This test will be undertaken as a continuation of the hydrostatic seat test.

B. Ensure that the valves has been drained after previous test.

C. A small amount of alcohol will be introduced on top of each seat assembly, see Figure 1.

D. The valve will be filled with the test medium at ambient temperature and pressurised to the test pressure as detailed above.

E. The test pressure will be maintained for the test period detailed.

F. During the test period the valve seat areas will be inspected for bubbles in the liquid - mentioned in Step (C) above.

G. On completion of the test the pressure will be released.

Unità da collaudare: tutte le unità.

A. Questo collaudo verrà eseguito come continuazione del collaudo idrostatico del seggio.

B. Assicurarsi che il fluido di prova del precedente collaudo sia stato rimosso dall'unità.

C. Una piccola quantità di alcool sarà introdotta nella parte superiore di ogni seggio in modo da immergerlo completamente, vedere Figura 2.

D. La valvola verrà riempita con il gas di prova a temperatura ambiente e pressurizzata alla pressione sopra indicata.

E. La pressione di prova sarà mantenuta per il tempo indicato.

F. Durante il tempo di collaudo l'area del seggio delle valvole verrà ispezionata per verificare l'eventuale fuoriuscita di bolle dal liquido menzionato al punto C.

G. Al completamento di questo collaudo la pressione sarà rilasciata.

ACCEPTANCE CRITERIA

1. There shall be no visible leakage over the duration of the test period in step E.

***CRITERI DI* ACCETTAZIONE**

1. Al punto E non ci dovranno essere perdite visibili durante il tempo di collaudo.

FIGURE 1 – PNEUMATIC SEAT TEST

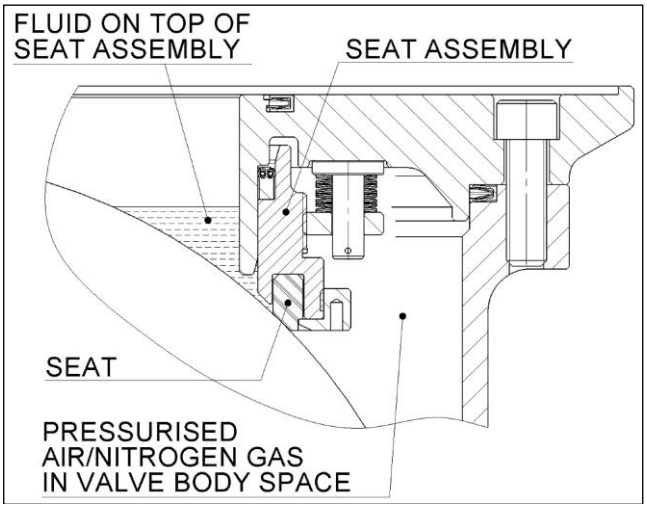

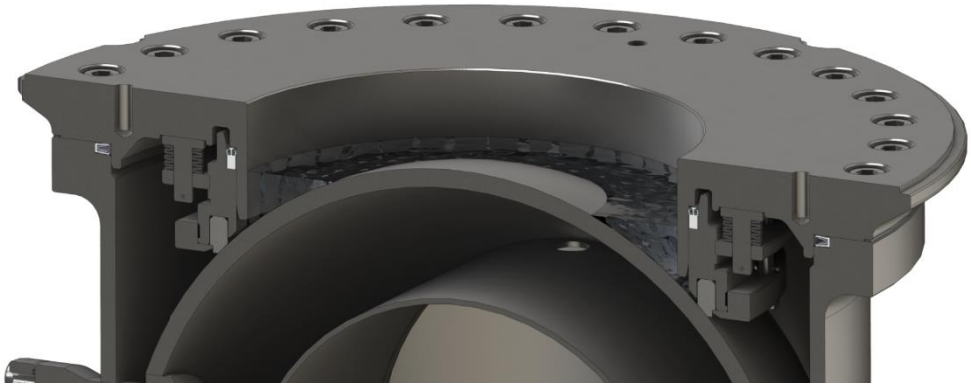

5. AMBIENT FUNCTION TEST / *COLLAUDO FUNZIONALE*

TEMPERATURE TEST / *TEMPERATURA DI COLLAUDO*	AMBIENT
TIME TO CLOSE VALVES / *TEMPO PER LA CHIUSURA VALVOLE*	5 TO 30 s
TIME TO CLOSE VALVES AND RELEASE ERC / *TEMPO PER LA CHOIUSURA VALVOLE E DISCONNESSIONE ERC*	7 (5+2) s

MINIMUM AVAILABLE HYDRAULIC PRESSURE / *PRESSIONE IDRAULICA MINIMA DISPONIBILE*	170 barg

Number of units to be tested: All Units

A. This test will be undertaken with the ERS fully assembled, inclusive of its hydraulic control system.

B. With the unit mounted in the MIB test rig or supported in a suitable manner, the MIB power pack will be connected to the ERS hydraulic control circuit.

C. The relief valve on the power pack connected to the ERS will be adjusted to the hydraulic pressure detailed in the above Table.

D. The ball valves will then be opened and closed. The flow control valve on the power pack connected to the ERS will be adjusted to achieve the minimum ball valves closing time detailed in the above Table.

Note:
For units fitted with integral flow control valves the minimum and the maximum closing times will be demonstrated.

E. The unit will then be set in Routine Test Mode (please refer to Figure 2), i.e:

- "X" pin removed
- "Y" pin fitted
- Shear pin fitted
- Reassembly bolting installed

F. With the ball valves open pressure will be applied to disconnect the ERC. The pressure will be maintained for 1 minute and it will be verified that the ERC does not move to demonstrate the proper functioning of the hydraulic interlock.

G. With the ball valves open the close ball valves and ERC disconnect controls will be operated simultaneously. The ball valves will close and the ERC cylinder extends without disconnection of the ERC (simulated release condition).

H. The ERC will be reset to its operating mode but keeping the reassembly bolting installed (please refer to Figure 3), i.e:

- "Y" pin removed
- "X" pin fitted

Numero di unità da collaudare: tutte le unità

A. Questo collaudo verrà eseguito con l'unità ERS completamente assemblata, incluso il sistema idraulico di controllo.

B. Con l'unità montata sul banco prova MIB o adeguatamente sostenuta, la centralina idrauliche MIB verrà collegata al circuito idraulico di controllo dell'unità ERS.

C. La valvola di sicurezza della centralina collegata all'unità ERS verrà impostata alla minima pressione idraulica disponibile indicata in Tabella.

D. Le valvole saranno aperte e chiuse. La valvola di regolazione flusso della centralina collegata all'unità ERS verrà impostata per raggiungere il tempo minimo di chiusura valvole indicato in Tabella.

Nota:
Per le unità dotate di valvola di regolazione di flusso, si verificheranno i tempi di chiusura minimo e massimo.

E. L'unità verrà impostata in modalità Routine Test (vedere Figura 2), ovvero:

- *Perno "X" rimosso*
- *Perno "Y" inserito*
- *Tiranti di riassiemaggio installati*

F. Con le valvole aperte pressurizzare la linea per disconnettere l'ERC. Mantenere la pressione per 1 minuto e verificare che l'ERC non si muove, a dimostrazione del corretto funzionamento dell'interblocco idraulico.

G. Con le valvole aperte attivare simultaneamente il controllo per chiudere le valvole e disconnettere l'ERC. Le valvole chiuderanno e il cilindro ERC si estenderà senza sganciare (condizione di sgancio simulato).

- Shear pin fitted

I. The open ball valves control will be operated and the ball valves reopened.

J. The close ball valves and ERC disconnect controls will be operated simultaneously. The pressure to close the valves and disconnect the ERC will be recorded as well as the total release time to close valves and open the ERC.

K. The hydraulic control to open the valves will then be activated and maintained for 1 minute. It will be confirmed that the valves does not move, i.e., that the ERC interlock valve is working properly (valves cannot be opened with the ERC in released condition).

L. The ERC shall then reassembled around the DBV flanges. The pressure to reconnect the ERC will be noted.

H. L'ERC verrà riarmato nella sua condizione operativa, mantenendo i tiranti di riassiemaggio installati (vedere Figura 3), ovvero:

- *"Y" pin removed*
- *"X" pin fitted*
- *Shear pin fitted*

I. Il controllo per aprire le valvole verrà attivato e le valvole saranno riaperte.

J. Si agirà contemporaneamente sui controlli per chiudere le valvole e sganciare l'ERC. La pressione per chiudere le valvole e disconnettere l'ERC verrà registrata, così come il tempo totale di chiusura valvole e di sgancio dell'ERC.

K. Il comando di apertura valvole verrà azionato per un minuto. Si dovrà confermare che le valvole non si muovono, cioè, che la valvola di interblocco ERC funziona correttamente (le valvole non si possono aprire con l'ERC in condizione sganciato).

L. Riposizionare il collare ERC attorno alle flange della DBV. Registrare la pressione per riconnettere l'ERC.

ACCEPTANCE CRITERIA

1. The valves operating time in step D shall be as detailed in the above Table.
2. It shall not be possible to disconnect the ERC in step F.
3. The ERC cylinder shall extend fully without disconnecting the ERC in step G.
4. The ball valves shall close before the ERC disconnects in step G.
5. The pressure to close the ball valves and disconnect the ERC in step J shall not be greater than the hydraulic pressure detailed in the aboveTable.
6. The total release time in step J shall not be greater than the time detailed in the above Table.
7. It shall not be possible to open the ball valves in step K.
8. The pressure to reconnect the ERC in step L shall not be greater than hydraulic pressure detailed in the above Table.

CRITERI DI ACCETTAZIONE

1. Il tempo di movimentazione delle valvole al punto D dovrà essere come indicato in Tabella.

2. Non dovrà essere possibile sganciare l'ERC al punto F.

3. Il cilindro ERC dovrà estendersi completamente senza disconnettere l'ERC al punto G.

4. Le valvole dovranno chiudere prima che l'ERC sconnetta al punto G.

5. La pressione per chiudere le valvole e disconnettere l'ERC al punto J non dovrà superare la pressione idraulica disponibile indicata in Tabella.

6. Il tempo totale di sgancio al punto J non dovrà superare quanto indicato in Tabella.

7. Non dovrà essere possibile aprire la valvola al punto K.

8. La pressione per riconnettere l'ERC al punto L non dovrà superare la pressione indicata in Tabella.

Figure 2 – ERC IN ROUTINE TESTING MODE
TYPICAL, FOR REFERENCE ONLY

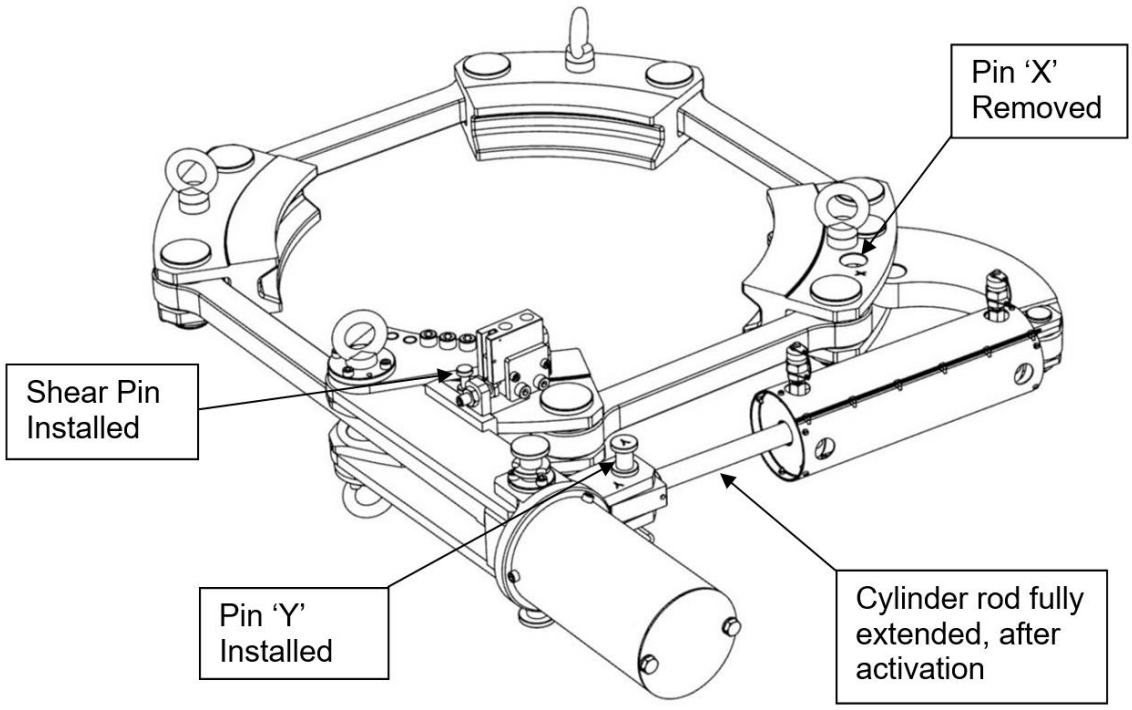

Figure 3 – ERC IN OPERATING MODE
TYPICAL, FOR REFERENCE ONLY

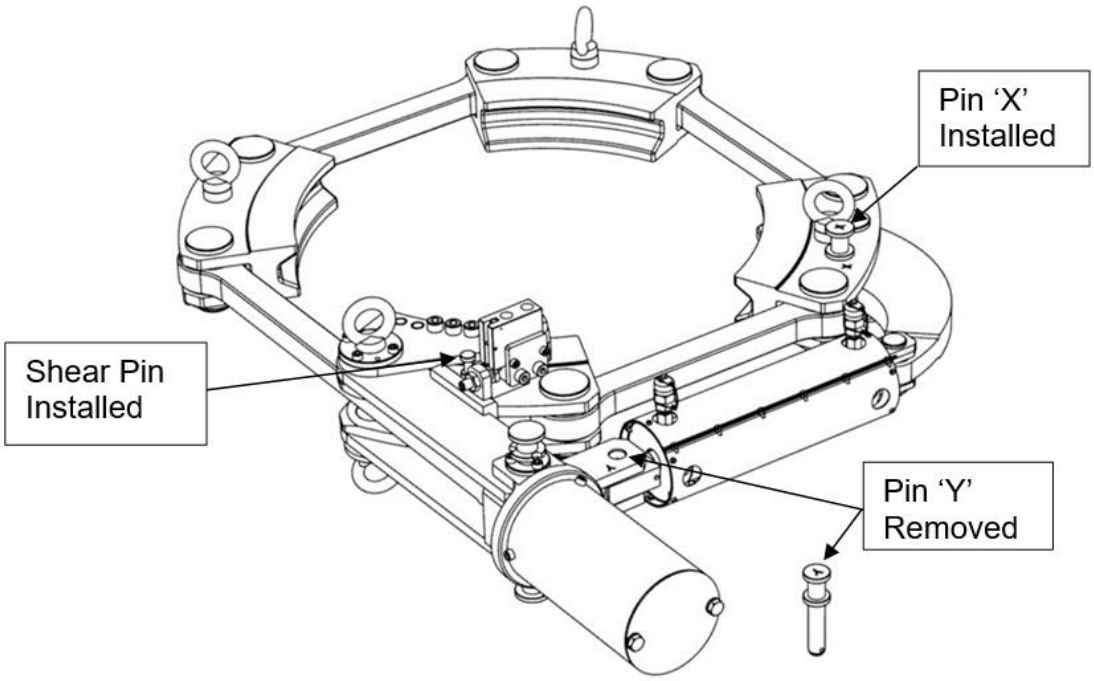

6. HYDRAULIC SYSTEM PRESSURE TEST / *COLLAUDO IN PRESSIONE DEL SISTEMA IDRAULICO*

HYDRAULIC TEST PRESSURE / *PRESSIONE IDRAULICA DI COLLAUDO*	375 barg

Number of units to be tested: All units

A. The test will be undertaken on completion of assembly of all hydraulic components and pipework. Actual performing of the test will be undertaken at a suitable time during the sequence of testing, at the discretion of the MIB supervisor.

B. Each individual run of pipework will be filled with hydraulic oil and pressurised to the hydraulic system test pressure as detailed above and the pressure held for not less than 5 minutes so that the system can be visually inspected for leakage.

C. If the system includes hydraulic valves and actuators, care should be taken that the manufacturer's recommendations with regard to maximum differential pressure is not exceeded; if necessary, both sides of the valve or the actuator may be pressurised simultaneously.

Unità da collaudare: tutte le unità.

A. Il test sarà eseguito al completamento dell'assemblaggio di tutti i componenti e tubi idraulici. Il momento idoneo per l'esecuzione del test rispetto alla sequenza dei collaudi sarà deciso a discrezione del supervisore MIB

B. L'intero sistema idraulico sarà riempito con olio idraulico e pressurizzato alla pressione idraulica di collaudo come indicato sopra e la pressione sarà mantenuta per non meno di 5 minuti in modo che il sistema possa venire ispezionato per verificare l'assenza di perdite.

C. Se il sistema include valvole idrauliche e attuatori, sarà necessario assicurarsi che non vengano superate le pressioni differenziali massime raccomandate dal costruttore; se necessario, potranno essere pressurizzati simultaneamente entrambi i lati della valvola o dell'attuatore.

ACCEPTANCE CRITERIA

There shall be no visible leakage over the duration of the test period in step B.

CRITERI DI ACCETTAZIONE

Non ci dovranno essere perdite visibili durante il tempo di collaudo di cui al punto B.

KANON
LOADING EQUIPMENT

Installation, Operating and Maintenance manual

Section 6

Maintenance & Repair

Kanon Loading Equipment B.V. makes warranties distinction in Maintenance, Repair and Installation.

Maintenance

With Maintenance, we mean:

- Operations that can be carried out by a generally educated service engineer.
- Operations which can be carried out by the onsite crew.

These operations are shown in the first part of this section (Maintenance).

Repair

With Repair, we mean:

- repairs, shown in the second part of this section (Repair).
- other repair-operations and troubleshooting.

  For this kind of operations we advise you to contact the Kanon Loading Equipment B.V. Service Department and follow their instructions.

Warranties will be void if:

- the procedure for repair, as written in this manual, is not followed.
- the advice of Kanon Loading Equipment B.V. Service Department are not followed.
- repairs are made by customers and 3rd parties, which are not appointed by Kanon Loading Equipment B.V.

Emplacement & installation

Not following the advice for emplacement & installation the loading arm can void the warranty.

Emplacement & installation of the loading arm without supervision of a Kanon Service engineer or without consulting Kanon Loading Equipment, will void your warranty.

Placing anchors and other civil work are always the responsibility of the customer.

Emplacement & installation must be executed in accordance with:

- Document "INS"
- Drawings :
  - P__06 "Base-load diagram"
  - "MLA-template"
  - "Anchor detail-plan"

These documents and drawings are part of section "Installation and commisioning".

For installation of Hydraulic and Electric, Kanon Loading Equipment B.V. requires you to hire a specialized company.

Connecting hydraulic and electric must be executed in accordance with:

- Document "INS"
- Drawings P__95, 96, 97 & 98 (hydraulic)
- Scheme P__91 (electric)

Drawings & schemes are part of section "Hydraulic electric system" of the IOM, or they are part of the separate book named "Hydraulic and electric system".

KANON

LOADING EQUIPMENT

Installation, Operating and Maintenance manual

Section 6.1

Maintenance

KANON
LOADING EQUIPMENT

Location swiveljoints MLA 270 single riser single inboard CNG

Kanon reference
002-006-040-00
15-07-2025

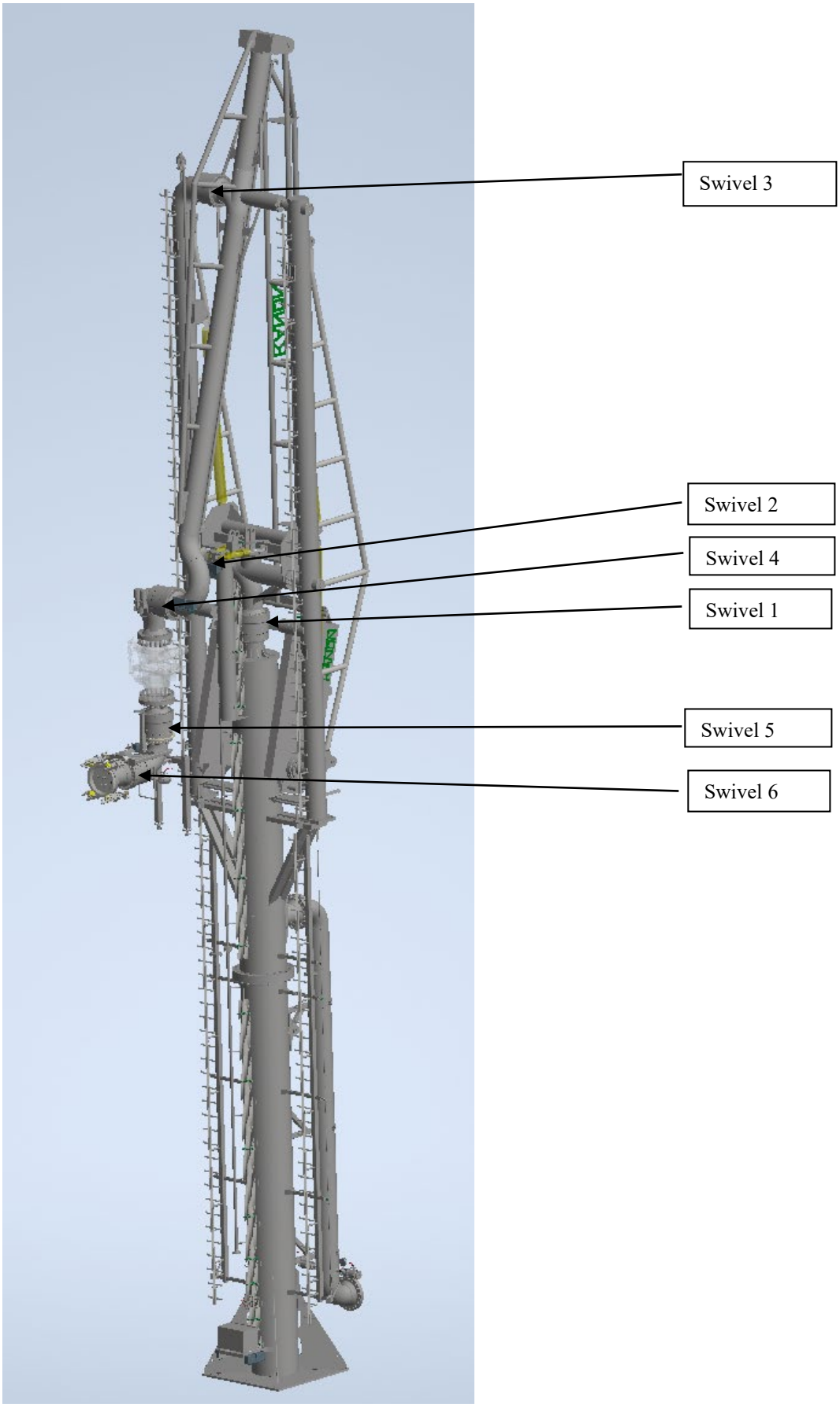

Grease:

Most greasing can be done with a Kroon LITHEP Grease EP2 grease.Greasing has to be done according maintenance instructions and lubricating scheme.

For grease type swivel joints: see Design Data drawing P__A05.

Maintenance:

Twice a year:

1. The slewing rings at the counterweight have to be lubricated . Apply ±50g of grease per grease nipple. Also inspect the seal of the slewing rings for cracks and wear.
   If requested more information about maintenance of the slewing ring can be downloaded from www.imo.de/Downloads.1414.0.html

2. The mechanical locking device has to be greased.

Once a year:

3. The Swiveljoints have to be inspected. By means of a visual inspection for details see 'Installation and Maintenance instructions Swiveljoint' in this IOM.

4. A resistance test on the isulationg flange.
   De test according the OCIMF (page 11 8.3.9)
   - As manufactured after installation in the arm 10000 ohms at 1,000 V
   - After hydrostatic testing 1,000 ohms at 20V
   - When the arm is in service 1,000 ohms at 20V

   Measurement to be performed with the arm in empty condition at ambient temperature

In case of trouble it is recommended to consult the KANON Loading Equipment BV Service Department at +31(0)36-5219777

Recommendations based on using CNG MLA(s) continuous loading Maintenance	Every loading check	Every 5x loading replace	1 months	3 months	6 months	12 months	30 months	60 months
Operated movements loading arm	x							
Visual check QCDC When necessary greasing QCDC	x							
Check the nitrogen pressure accumulator	x							
Replace QCDC face spiral wound gasket	x							
Check hydraulic system according to the manual	x							
ERC dry test				x				
Lubricate swivel joints				x				
Lubricate slewing rings counterweight				x				
Lubricate bearings turning points				x				
Lubricate mechanical lock				x				
Lubricate ERC acc. Maintenance manual MIB								
Hydraulic drives piston rods visual inspection				x				
Replacing hydraulic filters						x		
Replacing air conditioner						x		
Replacement air-breather Hydraulic Power Pack						x		
ERC live test						x		
Complete inspection*						x		
Check swiveljoints						x		
Check balance MLA						x		
Check paint system						x		

Recommendations based on using CNG MLA(s) continuous loading Replacement	Every loading check	Every 5x loading replace	1 months	3 months	6 months	12 months	30 months	60 months
Complete inspection of the entire MLA						x		
Non return Valve and purge valve Apex						x		
Hydraulic hoses							x	
stainless steel hoses at apex							x	
Valves (1” and 2”)							x	
Swivel dynamic O-ring replacement							x	
Solenoids							x	
Hydraulic cylinders								x
Hydraulic valve block								x
Flange seals								x

Recommendations based on using CNG MLA(s) continuous loading every week Revision	Every loading check	Every 5x loading replace	1 months	3 months	6 months	12 months	30 months	60 months
Revision of QCDC							X	

***NOTE**:* Kanon strongly recommends to arrange a complete annual inspection by a qualified Kanon service engineer. In Warranties are void if repairs are made by customer and 3rd parties, which are not appointed by Kanon Loading Equipment B.V.

***NOTE**:* This general schedule applies to all CNG MLA`s.

Warning: For maintenance the inboard always has to be locked to the riser.

Section 3 instruction:
002-003-000-00"locking device and maintenance device inboard, description and operating"

Recommendations based on using the MLA(s) at least 1 time a month	Monthly	3 months	6 months	12 months	between 60 - 84 months
Operated movements loading arm	x				
Visual check / greasing QCDC	x				
Check the nitrogen pressure accumulator	x				
Check hydraulic system		x			
ERC dry test		x			
Lubricate slewing ring counterweight			x		
Lubricate bearings turning points			x		
Lubricate mechanical lock			x		
Lubricate ERC spring cylinder			x		
Hydraulic drives piston rods visual inspection			x		
ERC maintenance test (with dummy if applicable) white / gas product			x		
ERC maintenance test (with dummy if applicable)				x	
Complete inspection*				x	
Check swivel joints				x	
Check balance loading arm				x	
Check paint system				x	
Replacement air-breather from hydraulic power pack (HPP)				x	
Replacement pressure filter from hydraulic power pack (HPP)					x
Replacement return filter from hydraulic power pack (HPP)					x
Replacement hydraulic hoses					x
Replacement hydraulic oil from system					x

***NOTE:** Kanon strongly advices a complete annual inspection by a qualified Kanon service engineer. To keep the equipment in top condition and in line with the local requirements consult Kanon Loading Equipment B.V service department: +31 36 521 97 77.

***NOTE**: This general schedule applies to all MLA's.

KANON LOADING EQUIPMENT

CNG Loading Arm MLA 270
Lubrication points

Kanon reference
002-006-038-00
15-07-2025

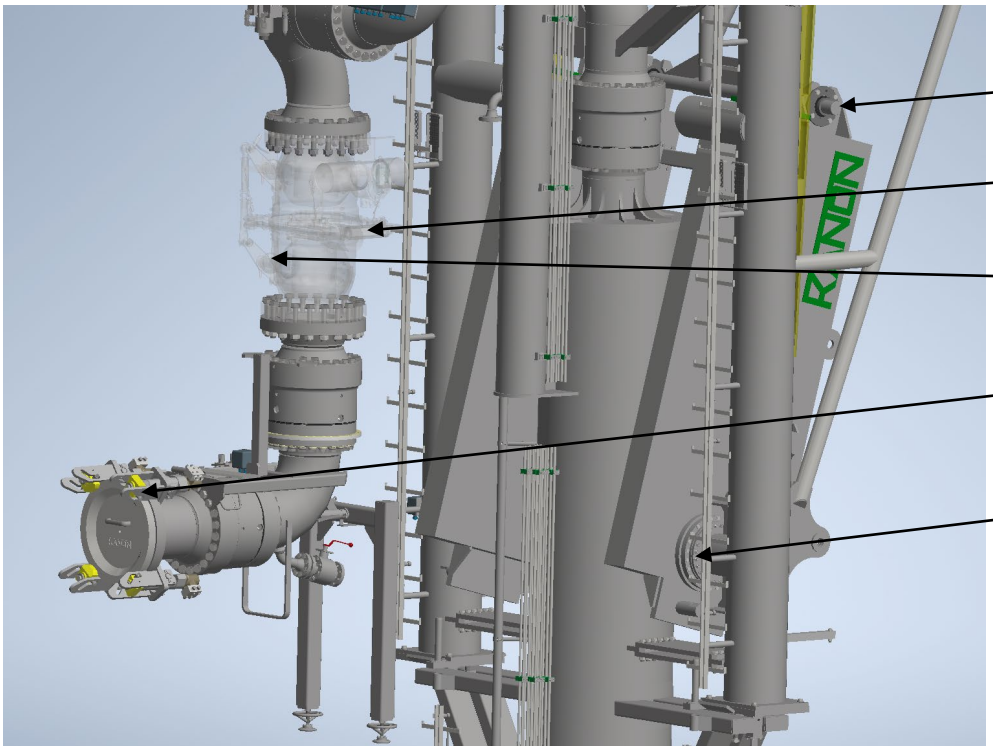

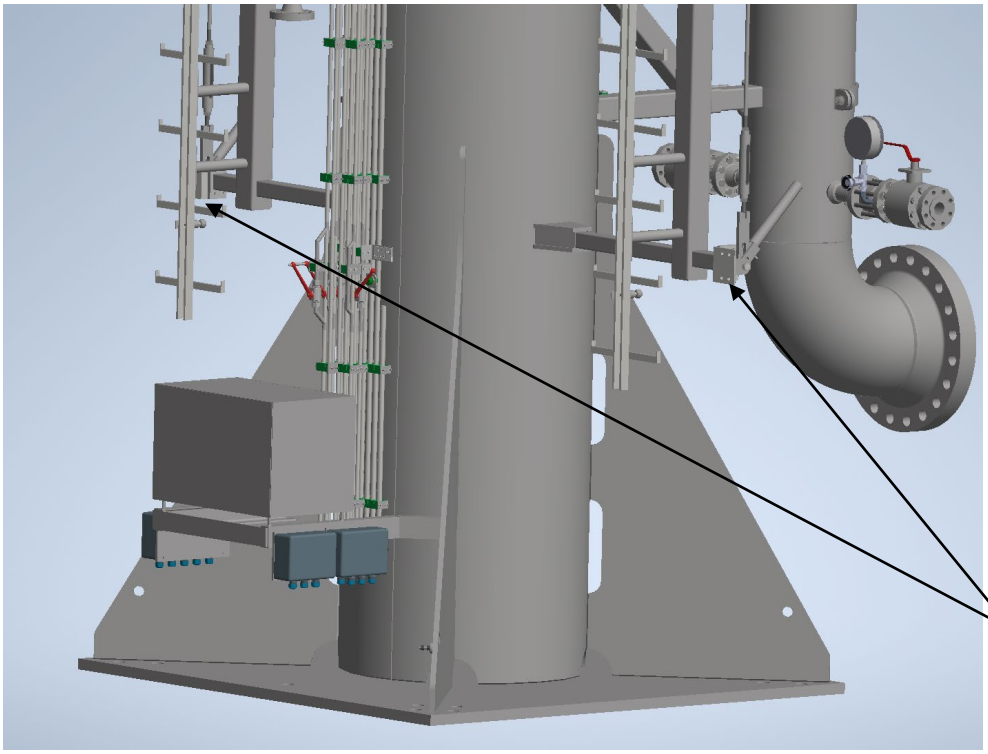

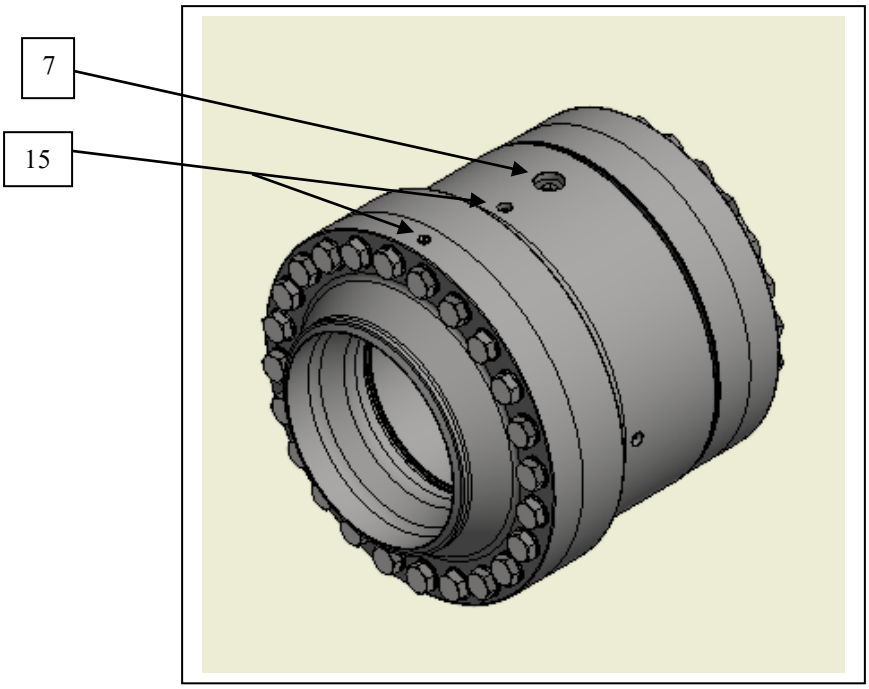

Maintenance

This swivel joint is designed so regular maintenance is minimal. The ball races are provided with long life lubrication. Inspection is required once a year, re-lubrication is required depending upon the operating conditions. No grease in the ball races may be caused by leaking of the product seal. In that case the product seal must be replaced and the ball races be provided with new grease.

When relubrication is needed use Design Data sheet P242068A05 to select the proper grease.
For relubrication remove plug (7) and add grease with a handgun.

Function Control (15)

The swivel joint outerbody is provided with a small hole.If product is coming out the product seal is leaking and must be replaced immediately. Never block this hole.

NOTE; in case of trouble of which the reasons are not clearly known, it is advisable to consult the manufacturer. Especially when the equipment has visual damages or when the loading arm has been overloaded, due to incorrect operation or external influences.

GREASE:

Most greasing can be done with a *'Kroon LITHEP Grease EP2'* grease.

Greasing is to be done according to maintenance instructions and lubricating schematics.

The following parts are provided with this grease :

- Slewing rings on the counterweight.
- Slide bearings of the parallel structure to counterweight.
- ERC spring cylinder and the inside of the ERC clamp.
- Mechanical locking devices.
- Guidance slots Hydraulic QCDC.

Grease type used in swivel joints:
-Alma plex 1275

Also see P_A05, “Design data” drawing in section 7 “Drawings as built”.

HYDRAULIC OIL:

Hydraulic oil is SHELL TELLUS S2 V32 (formerly SHELL TELLUS T32).

WARNING: For maintenance of the MLA the Inboard arm ALWAYS has to be mechanically locked with the lock pin / lock bolt. For instructions on the lock pin see section 3 "002-002-000-00 Locking device and maintenance device inboard , description and operating".

Monthly:

1. The loading arm has to be operated in all movements at least once a month, to avoid blocking of the hydraulic valves. In case of an emergency the blocked hydraulic valves can be released by hand-operation of the pin on the valveblock.
2. The hydraulic QCDC has to be inspected and greased. For details see"014-999-003-00 Installation,operating and maintenance Manual hydraulicaly operated CNG QCDC". QCDC'.

Every three months:

3. The hydraulic system has to be inspected. For details later in this section see 'Maintenance Kanon Hydraulic system MLA270'
4. It is recommended to perform the ERC dry test every 3 months. For details see section 5 "015-006-003-00 Testing and maintenance of the ERC"

Twice a year:

5. The ball bearings of the turning points of the parallel structure have to be lubricated.
6. The slewing rings at the counterweight have to be lubricated. Apply ±50g of grease per grease nipple.Inspect the seal of the slewing rings for cracks and wear.
   If requested more information about maintenance of the slewing rings can be downloaded from www.imo.de/Downloads.1414.0.html
7. The mechanical locking device.
8. The piston rods of the hydraulic drives have to be inspected (visually).
9. The spring cylinder and the inside of the ERC clamp have to be lubricated. Apply ±25g of grease to the spring cylinder.

Annually:

10. The Swiveljoints have to be inspected . For details see"008-006-004-00 Maintenance instructions swivel joint SHP834 DN400"in section 6.
11. It is recommended to perform the ERC wet test once a year. For details see section 5 "Emergency release coupler of this Manual.
12. Check the balance of the loading arm in freewheel mode and adjust weigths if necessary. For details see section 2 "002-006-003-00 Adjustment balance single inboard, single outboard '.
13. Inspect the painted surfaces of the loading arm. Repair if necessary.

In case of trouble it is recommended to consult the KANON Loading Equipment Service Department at +32(0)36-5219777

1.0 Introduction

This instruction shows the position of the MLA during inspection and/or maintenance of the triple.
The triple shall be manoeuvred to the riser as close as possible.
At the height where it can be reached by a maintenance engineer when standing on the jetty.

This instruction is intended for:

- Kanon service engineers
- Site maintenance engineers

2.0 Procedure

1. Manoeuvre MLA to maintenance position, as shown in figure 1.
   Follow instructions in section “Operating instructions” of this manual, if necessary.

2. Activate the hydraulic lock with the hand levers on riser, turn off the HPP and lock start switch of MLA control, so movement of MLA cannot be started during inspection or maintenance.

WARNING; before starting any work, please check if the MLA is hydraulically locked, the HPP is turned off and the start switch of the MLA control is locked.

3. If maintenance or repair is necessary, follow specific instructions in section “Maintenance & Repair” of this manual.

NOTE; in case of any doubt please contact the Kanon Loading Equipment Service Department at +31 36 52 19 777.

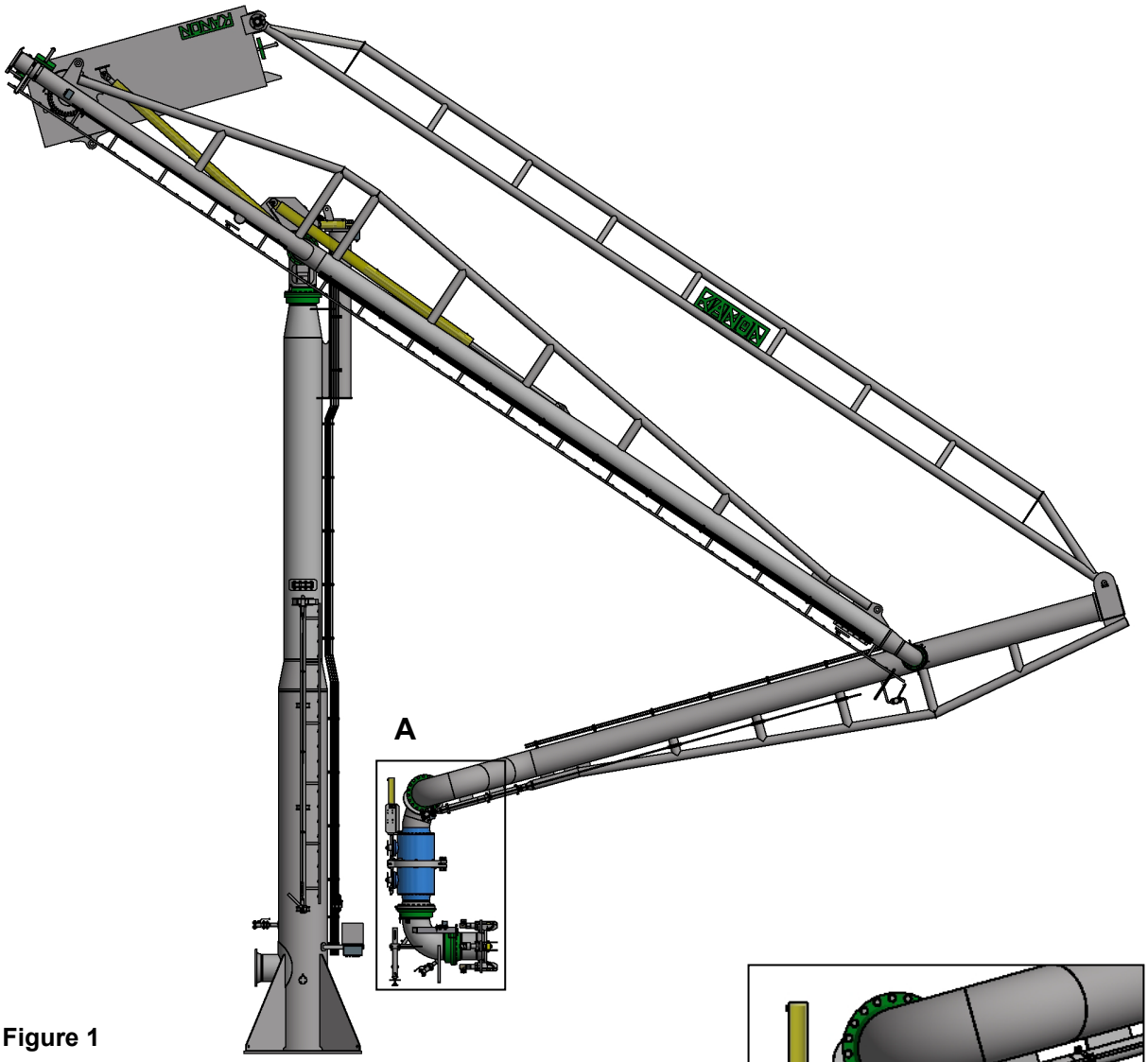

Figure 1

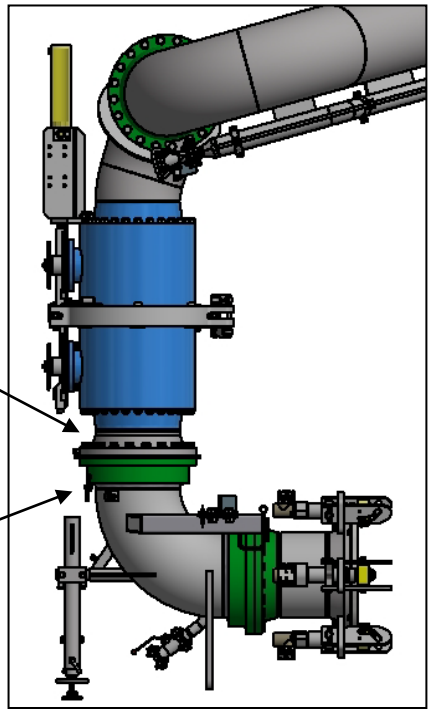

Detail A: Triple assembly

KANON

LOADING EQUIPMENT

Section 6.2

Repair

1.0 Introduction

To electrically insulate the MLA from the ship, an insulation flange or insulation spool is part of this MLA. The insulating flange is situated between the upper and the lower part of the triple assembly (figure 1) and can be used in the vapour line as well.
The insulating spool (figure 3) is only used in the vapour line.

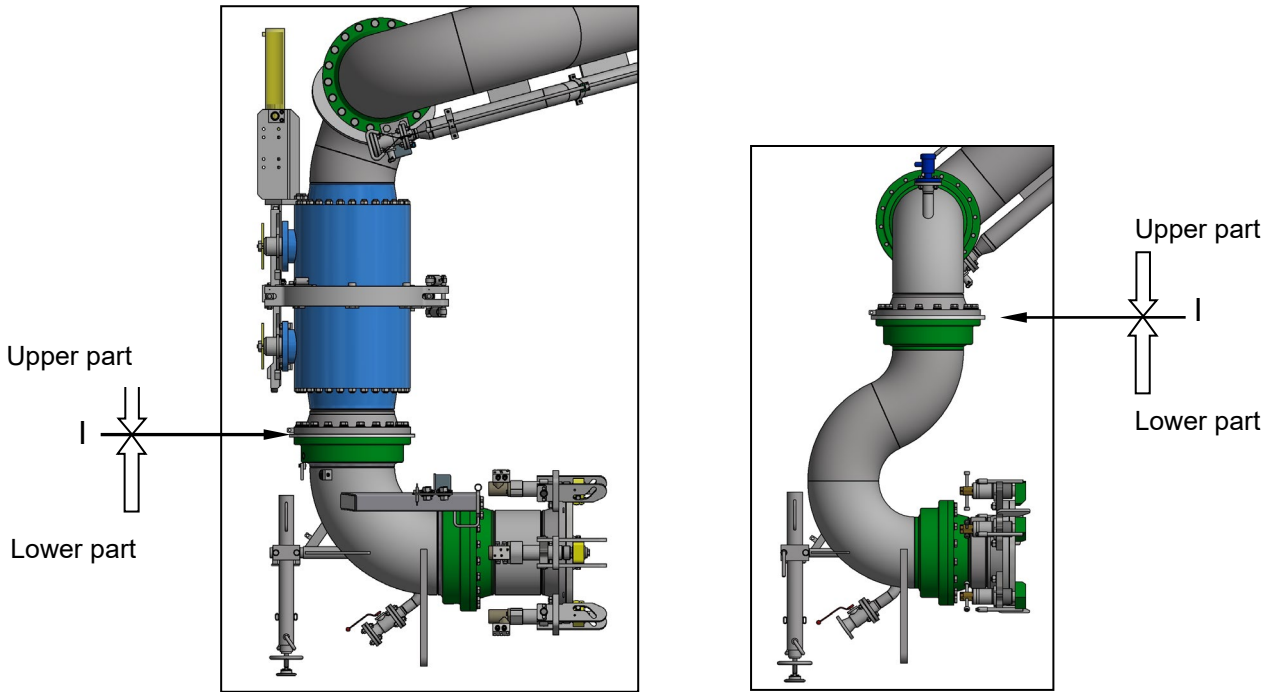

Figure 1 Triple assemblies with insulation flange (I)

1.1 Intended for

This instruction is intended for:

- Kanon service engineers.
- Site maintenance crews.

1.2 Applicable tools

- General toolbox.
- Torque wrench.
- Insulation resistance meter.
- Den Braven Hybrifix 302" or equivalent sealant. For advice about equivalents contact Kanon loading equipment at : +31 36 52 19 777.
- Transparent sanitary silicone sealant.
- Dummy manifold, or ships manifold, a cherry-picker, pontoon.

WARNING; replacing the insulation flange and/or insulation spool is a potentially dangerous procedure which can cause serious injuries and damage.
Prior to starting any work, make sure the procedure is entirely clear and take appropriate safety measures. Work thoroughly.
In case of any doubt please contact Kanon Loading Equipment, +31 36 52 19 777.

2.0 Stray current test

With a stray current test, the insulation flange and/or insulation spool can be tested for damage or aging.
Measure between the two stainless steel connections (U and L) situated on upper and lower elbow of the triple assy and on upper and lower part of the vapour line.
See figure 2, 3 and 4. When a insulation spool is used. On the parts list P__11 (triple assy) the measuring points are called “ISO check”.

For stray current test values, see the “Stray current test”- form of the manufacturing data report (MDR, section “Test procedures and results”). If measurement values are lower than prescribed on this form, the insulation flange and/or insulation spool needs to be replaced.
If no stray current test form is present, please contact Kanon Loading Equipment BV.
The stray current shall be tested once a year. In case the MLA is damaged, it is recommended to check stray current before starting a new loading.

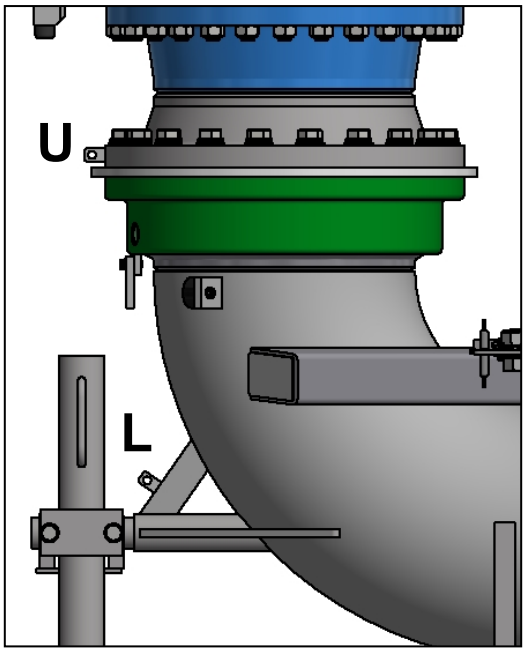

Figure 2

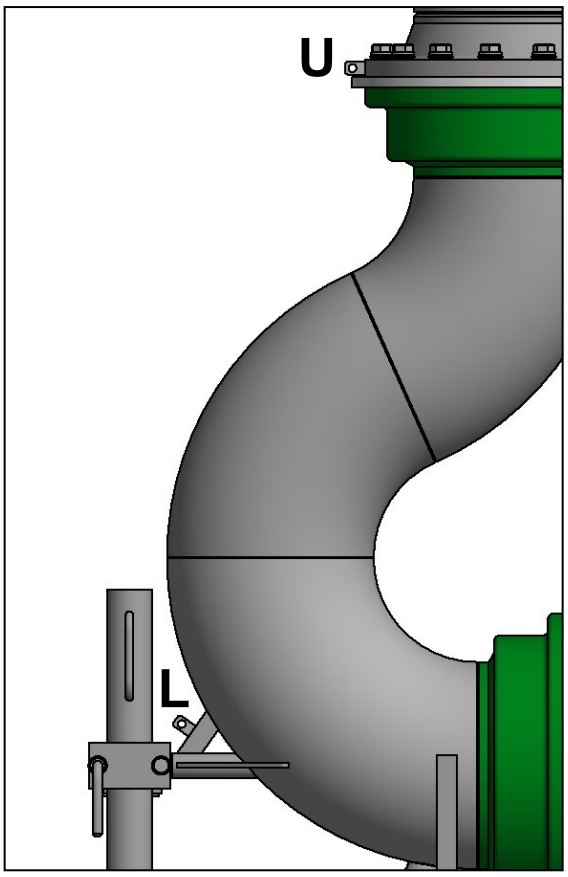

Figure 3

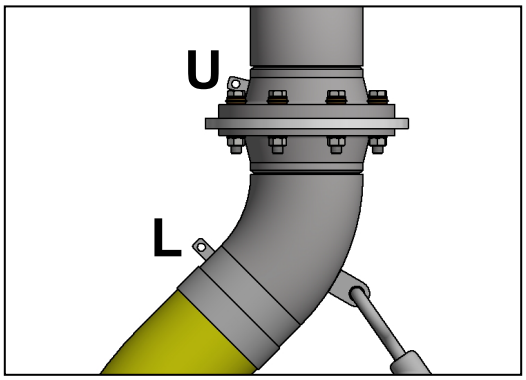

Figure 4, Insulation flange in vapour line

3.0 New insulation flange/spool and product seal swivel joint

The type of insulating flange set assy or insulation spool can be found on parts list of P__11.

It is recommended to exchange the product-seal of the swivel joint, located above the insulation flange, as well when the insulation flange has to be exchanged.
(This is not applicable in case of an insulation spool or another insulating set assy, in vapour line).
Follow Kanon instruction “008-006-000-00, Installation & repair instructions swivel joint” and use the Kanon datasheet for the applicable swivel joint. Check for the correct product seal, the swivel joint parts list. Documents are part of this actual section of the manual.

4.0 Replacing the insulation flange and/or insulation spool

1. Manoeuvre MLA in maintenance position, or in any position which makes the triple accessible for maintenance and repair. This position depends on the situation on site.
   It is preferable to connect the triple to a dummy manifold on the jetty (when delivered with the MLA: see parts list P__A08).
   Another way is to connect the triple to the ships manifold flange.
   In other cases it might be best to use a pontoon or a cherry-picker on the jetty.

NOTE; in case of any doubt, please contact Kanon Loading Equipment, phone +31 36 52 19 777.

WARNING; if the triple is not connected to the ship flange or to a dummy manifold, the triple may become unstable.

2. Activate hydraulic lock, turn off the HPP and lock start switch of MLA control, so movement of MLA cannot be started during replacement procedure.

WARNING; before starting any work, please check if hydraulic lock is activated, the HPP is turned off and the start switch of MLA control is locked.

3. Place two chain hoist(s) between upper and the lower part of the triple assy. In such a way, the MLA will stay in balance when the two parts are disconnected.

4. Dismount the nuts and remove the bolts and rings from the flanges. If applicable, remove the bolts out of the insulation spool (vapour line).

5. When changing the insulating set assembly, use the chain hoist(s) to create clearance between the flanges of the triple.
   Remove the insulating set assembly and the product seal of the swivel joint.

6. Remove all parts of the insulating set assy and clean all faces and chamber of the product seal of the swivel joint. If applicable, remove the insulation spool.

7. Position the new product seal of the swivel joint.

8. Position the new insulating set assy or insulation spool.
   See figures 2, 3 and 4 with parts list of this document.

9. When re-assembling the insulating set assy, put a small amount of sanitary sealant on top and bottom face of the insulation washer (item 1) and on the O-ring (item 2) to keep it in place.

10. Add a small amount of “Den Braven Hybrifix 302” or equivalent on top of the insulation flange (item 10).

11. Add a transparent sanitary silicone sealant on the insulating washer (item 1) before installing them. to prevent water entering between the flange and the insulation flange ring.

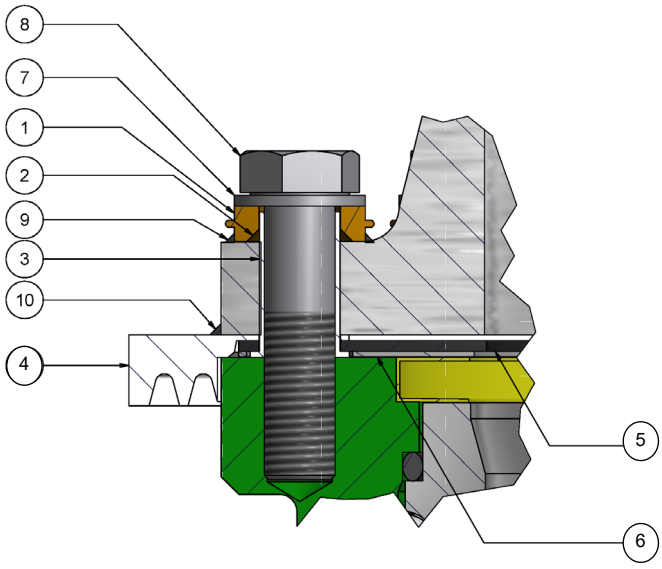

Figure 2
Insulating set assy swivel joint

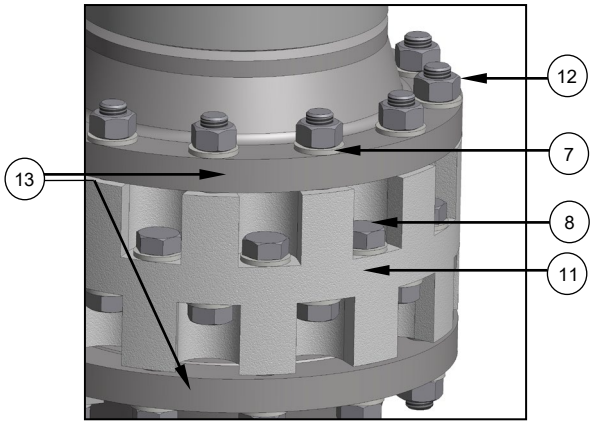

Figure 3
Insulation spool

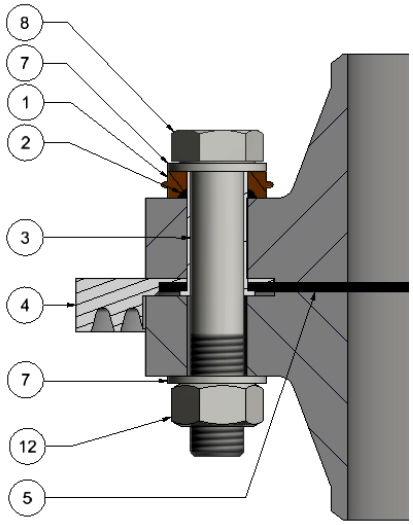

Figure 4
Insulating set assembly (no swivel joint)

Item	Description
1	Insulating washer
2	O-ring
3	Insulating bush for bolt
4	Insulating ring
5	Insulating gasket
6	Ring insulating flange (AISI 316)
7	Washer
8	Hex bolt
9	Sealant; Sanitair Silicone
10	Sealant; Den Braven Hybrifix 302
11	Insulating spool
12	Nut
13	Flange vapour line

Parts list for figure 2, 3 and 4

CAUTION; before mounting upper flange, insulating flange assy and lower flange together, please take care the flanges are in line. See figure 5.
When mounting flanges without being in line, the insulating bushes will be damaged by the threads of the bolts.

12. Use the chain hoists to position the flanges in line.

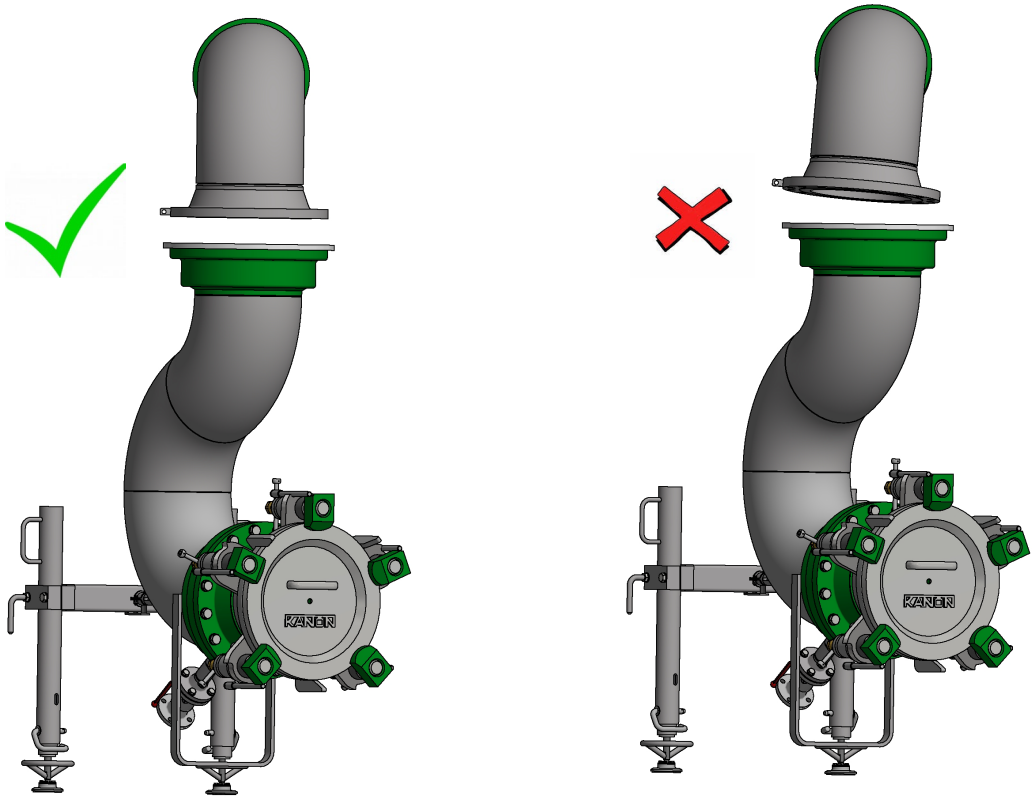

Figure 5

13. Screw the bolts through upper flange and insulating set assy, in the swivel joint flange of the triple. Do not tighten jet.
    In case of smaller insulating set assemblies or insulation spools, position bolts and nuts without tightening.
    The torque on bolts (item 8, figure 2, 3 and 4) depends on type of insulating set assy or insulation spool.

14. For the tightening sequence for all kind of flanges and torques at insulation flanges, please refer to Kanon instruction “000-000-002-00, General requirements to tighten bolts and nuts”.
    For torques at insulation spools, see table 1.

15. Tighten the bolts (or bolts and nuts connection) with a correctly set torque wrench.

16. Perform the stray current test again before operation.

Torque insulating spools

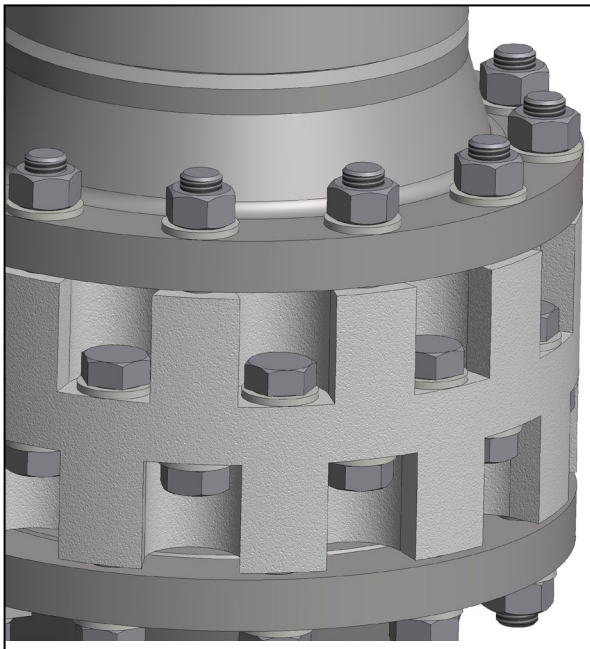

Partnumber	Description	Torque (Nm)
	Insulating spool 2”- 150#	73
99803205	Insulating spool 4”- 150#	73
99803206	Insulating spool 6”- 150# ¾” bolts	103
99803130	Insulating spool 8”- 150# ¾” bolts	103
99803207	Insulating spool 10”- 150# 7/8” bolts	204
99803207	Insulating spool 10”- 150# M24 bolts	327
	Insulating spool 12”- 150# 7/8” bolts	204
	Insulating spool 12”- 150# M24 bolts	327
	Insulating spool 16”- 150# 1” bolts	306

Table 1 Torque insulating spools

1.0 General

The lifting bridge shall be used for replacing the product seal of the first swivel
The correct identification number of the lifting bridge to be used can be found on the "Jetty layout" part list P_A08.
The correct lifting bridge is supplied with the MLA:

!!Pay attention the "Fabr. nr." of the MLA and the lifting bridge match ! (figure 1).!!

For an overview of existing lifting bridges see table 1 at the end of this instruction.

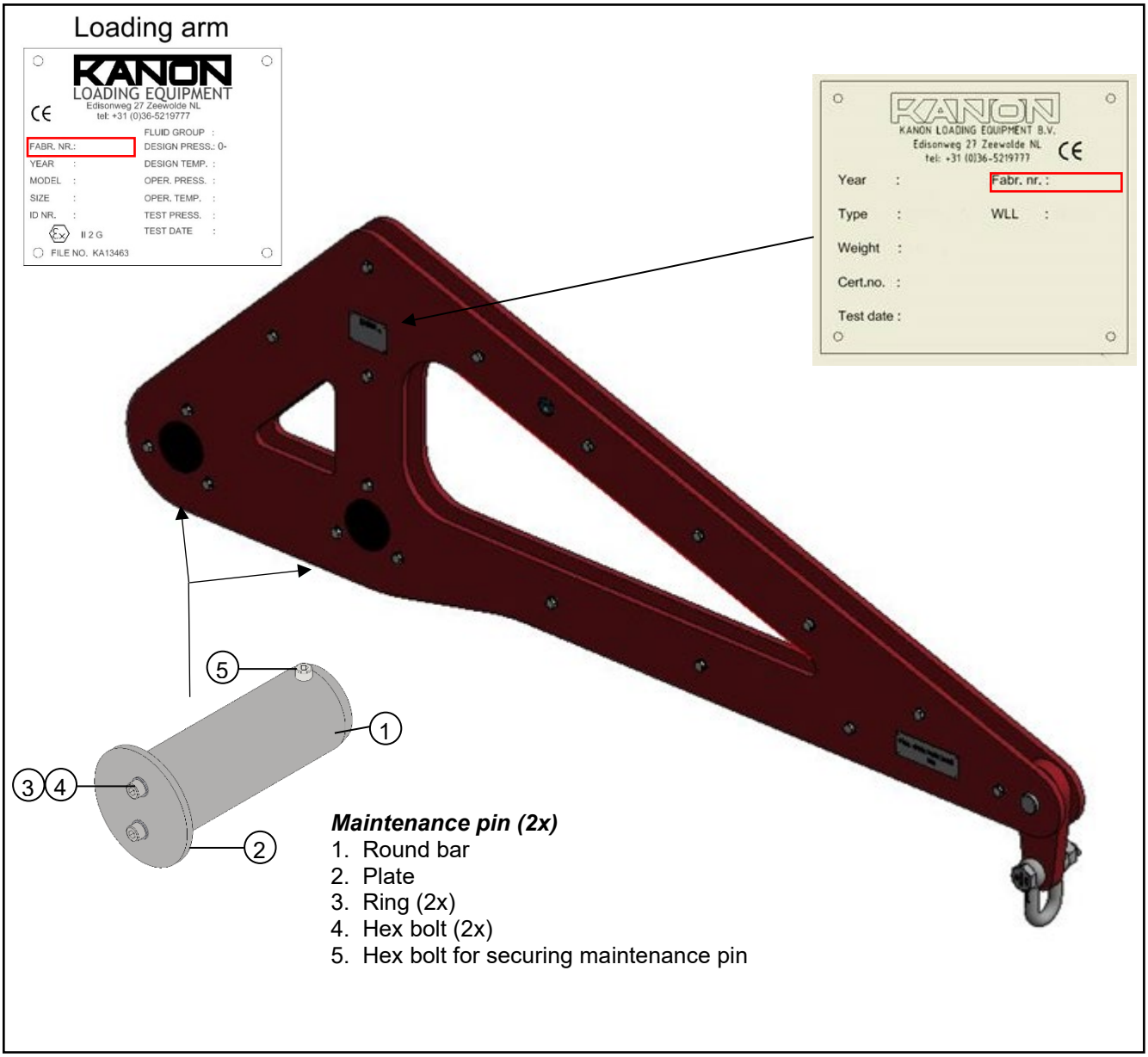

Maintenance pin (2x)

1. Round bar
2. Plate
3. Ring (2x)
4. Hex bolt (2x)
5. Hex bolt for securing maintenance pin

Figure 1

NOTE; when tightening, follow Kanon instruction “000-000-002-00, General requirements for tightening bolts and nuts”, in section 2 “of this manual.

2.0 Safety requirements

All safety requirements for the lifting bridge and Marine Loading Arms are to be found in section 1 “Guide to directives”, document “002-001-000-00, General safety requirements Marine Loading Arms”. Read thoroughly before starting any work.

Before each use:
-Check for deformation and cracks
-Verify bolt for correct torque

NOTE; Specific safety requirement applicable for the lifting bridge:

- Every year, the lifting bridge shall be inspected by a “expert”.
  This could be a company inspector..
  What is to be tested can be found at paragraph 7.0 “Inspection list”.
- Weather conditions: max. wind speed 8 m/sec.

CAUTION; take note of all entrapment hazards of figure 5 and always have hands clear of all small tight areas.
Entrapment hazards can a cure:

- when lifting bridge is lowered between hoisting plates heel and riser.
- when maintenance pin is connected.
- when lifting bridge is completely / partly dismantled, bolting part together (lifting bridge will be delivered to client fully assembled).

3.0 General requirements

The lifting bridge is fully assembled and delivered with the MLA.

NOTE; the lifting bridge shall be stored on a pallet in a dry warehouse.

Required number of cranes for lifting bridge and chain hoist: 1
Total weight of lifting bridge: see "Jetty layout" part list P_A08.

4.0 Lifting point

The centre of gravity of the lifting bridge is indicated with a sticker. (figure 2).

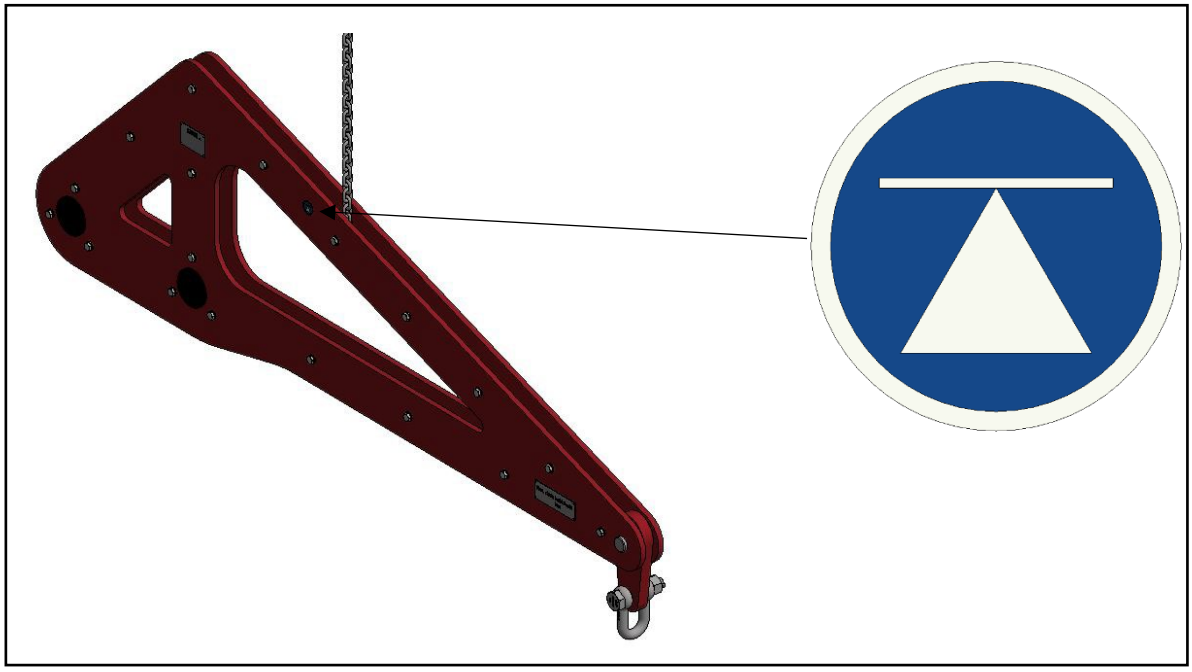

Figure 2

5.0 Emplacement plan

NOTE; place the MLA in stored position and lock the inboard arms with the lock pin / lock bolt and locking device.

- Remove the pins of the hydraulic slewing cylinders at the side of the riser and slew the cylinders out of the blocks (figure 3). It is not necessary to disconnect the hydraulic hoses.

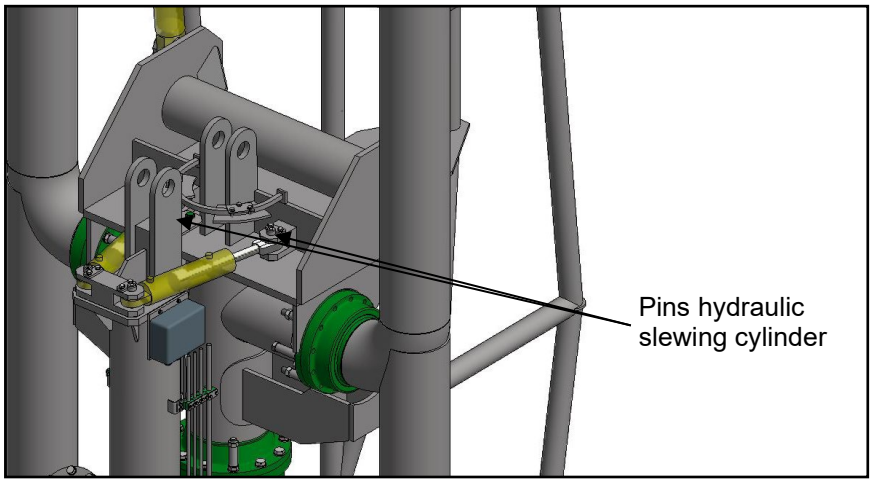

Figure 3

- Lift the lifting bridge at the traverse (figure 2) and mount it on top of the riser / heel.

- Place the maintenance pins, see figures 1 and 4.
- Mount the lock bolt in the maintenance pins 2x, figure 1 (pos. 5) and figure 4.

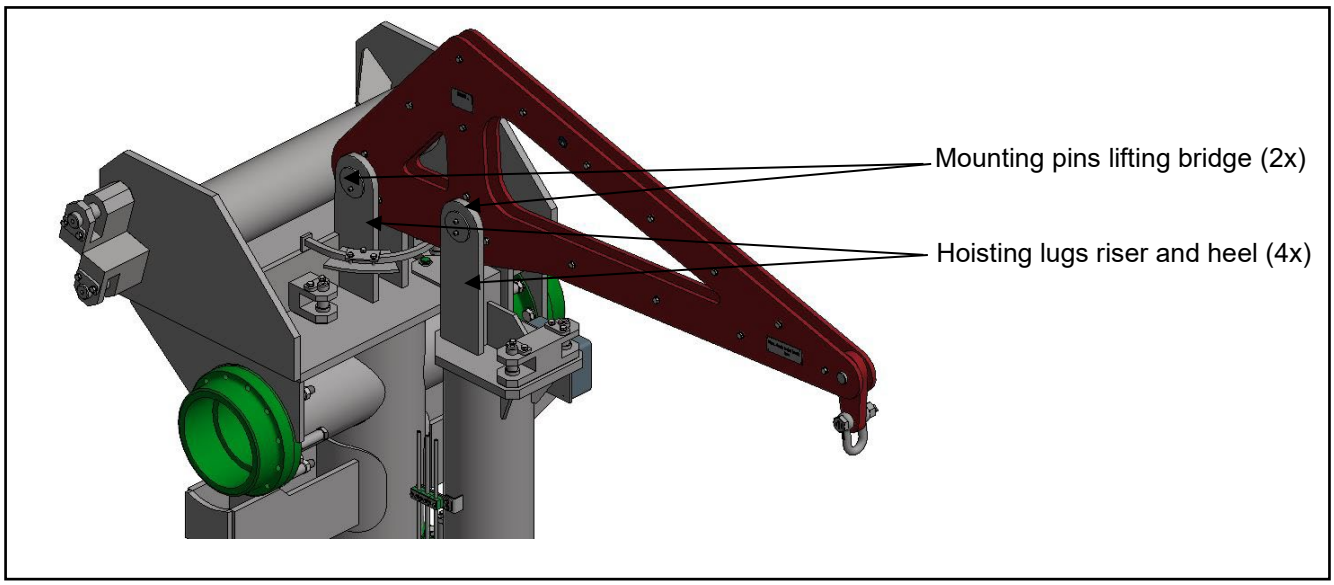

Figure 4

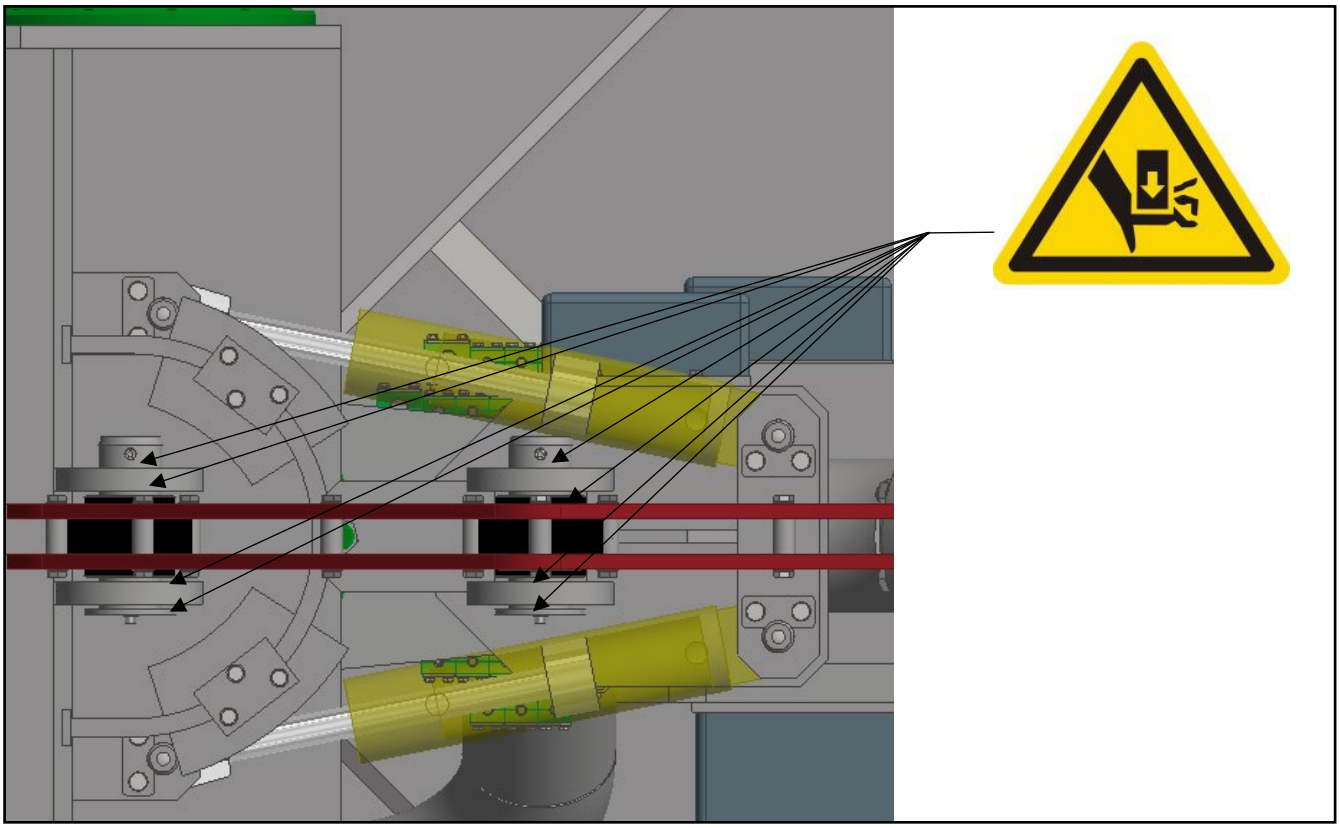

Figure 5

- Install the chain hoist on the lifting bridge and hook it, with a double leg web sling, to the base plate. For maximum chain hoist load see ident plate on the lifting bridge see figure 6.
- *ATTENTION: Stronger/heavier chain hoist than prescribed shall under no circumstances be used. Consequences could be harmful / lethal.*

Figure 6

- The lifting bridge is now in place to replace the productseal of the first swivel.

NOTE; **maximum tilt position chain hoist in front view: 3 °**

6.0 Overview lifting bridges

Mentioned below is an overview of the new lifting bridges (table 1).

NOTE; the lifting bridges are not exchangeable. The fourth version lifting bridges do not fit in the old MLAs.

Ident nr. (new)	Description	Max. load – Centre to centre dimension	Required chain hoist
20000245	Lifting bridge	18-350	5 ton
20000246	Lifting bridge	18-250	5 ton
20000247	Lifting bridge	30-450	10 ton
20000248	Lifting bridge	30-350	10 ton
20000249	Lifting bridge	40-450	10 ton
20000250	Lifting bridge	50-450	10 ton
20000251	Lifting bridge	60-450	12 ton

Table 1

NOTE; in case of any doubt please contact the Kanon Loading Equipment Service Department, phone number: +31 36 52 19 777.

7.0 Inspection list

Ident nr:				
Production date:				
Name inspector:				
Company:				
Approved until:				

"Approved until" shall normally be a year. This can be shortened, due to measurements that need to be taken. When on a / or more positions "No" are filled in: This issue(s) shall be resolved before lifting bridge can be approved. A 200% WLL retest is necessary in case of doubt about the control points or major changes in the design of the lifting bridge.

Lifting bridge

Description	Yes	No	Measurements that shall be taken
Is lifting bridge stored on a pallet in dry warehouse			
Completely assembled, no parts missing			
Paint quality			
Deformation, surface rust, excessive rust			
Correct bolts are used			
Conditions of the bolts			
Bolts are tightened. Bolts are pretension, for torque see IOM, Kanon instruction "000-000-002-00, General requirements to tighten bolts and nuts"			

Pin maintenance device (2x)

Description	Yes	No	Measurements that shall be taken
2x pin maintenance device is present			
Deformation, surface rust, excessive rust			
Correct bolts are used			
Bolts are tightened			

Signed by,

…….

Aligning sliding brackets

Copy of KGR no. 100-03-EX-EN

1.0 Introduction

This instruction is applicable when:

- Heel is equipped with swivels 10”, 12” or 16” and sliding brackets.
- Sliding brackets shall be assembled.
- Sliding brackets are not aligned with swivel 2L or 2R.

This instruction is intended for:

- Factory assembly workers.
- Service engineers.

Minimum applicable tools:

- General toolbox.
- Torque wrench.
- Set feeler gauges.

1. Shim 3 mm
2. Shim 2 mm
3. Shim 1 mm
4. Shim 0,5 mm
5. Slide bearing
6. Washer plate
7. Hexagonal bolt
8. Washer
9. Hexagonal nut
10. Hexagonal screw
11. Washer
12. Cover plate
13. Vertical bearing plate
14. Swivel outerbody

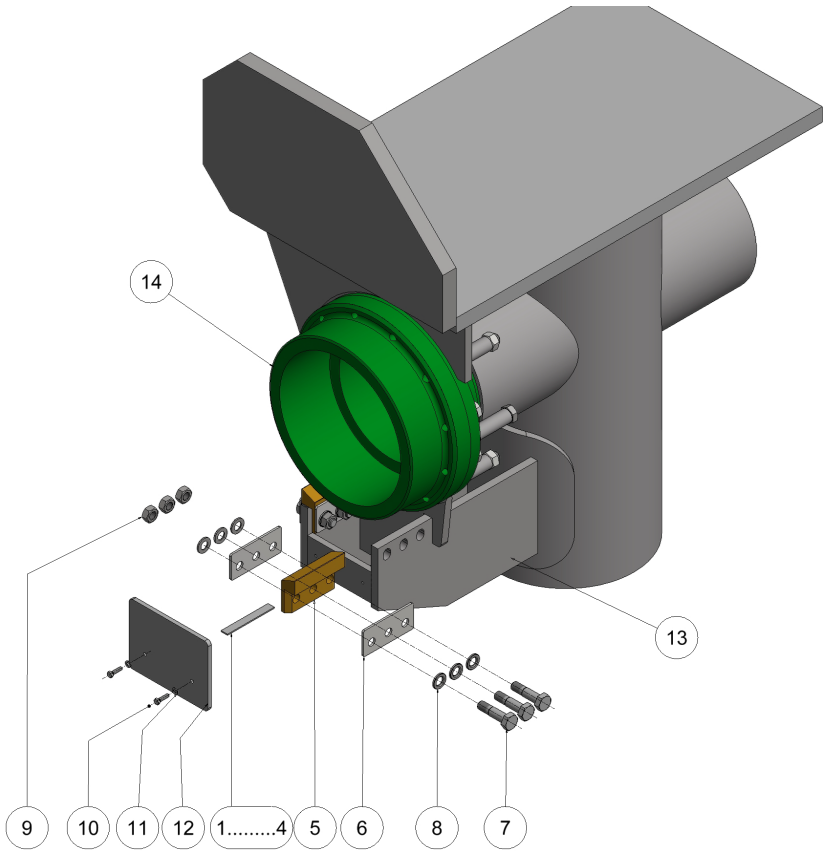

Figure 1

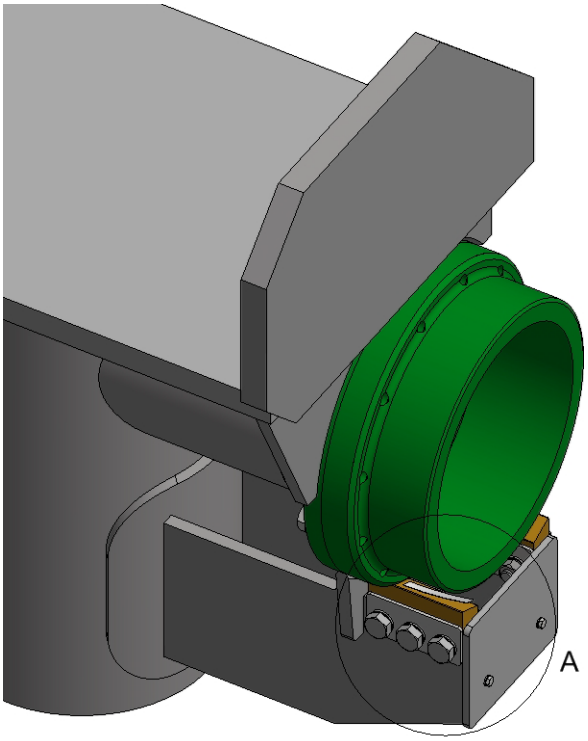

Figure 2

Torque 10.9 fasteners	
Swivel	**Nm**
10”	172
12”	230
16”	286

Table 1

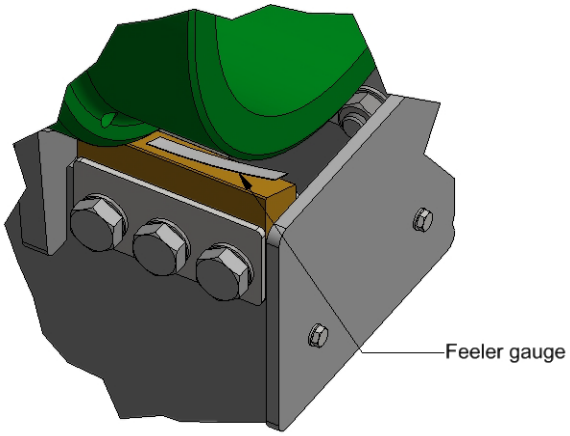

Detail A

2.0 Assembly procedure for factory assembly workers

When a number is mentioned it refers to figure 1.

1. Place hexagonal bolts (7) and washers (8) in outer washer plate (6), through the vertical bearing plate (13) and slide bearing (5).
2. Place inner washer plate (6), washers (8) and hexagonal nuts (9).
3. Measure space between slide bearing (5) and swivel outerbody (14) with feeler gauge (see figure 2). Gap between outerbody (14) and slide bearing (5) shall be between 0 and 0.5 mm.
4. If necessary, distance shall be filled up underneath the slide bearing (5) with shims (1…4) until gap between slide bearing and outerbody is between 0 and 0.5 mm.
5. Tighten hexagonal nuts (9) with a torque wrench according values table 1.
6. Repeat this procedure for the opposite side.
7. Place cover plate (12) and mount hexagonal screws (10) and washers (11).
8. This assembly procedure shall be executed on both swivels (2L and 2R).

3.0 Alignment procedure for service engineers

When a number is mentioned it refers to figure 1.

Follow instructions before maintaining the product seal;

1. Measure space between slide bearing (5) and swivel outerbody (14) with feeler gauge (see figure 2). Gap between outerbody (14) and slide bearing (5) shall be between 0 and 0.5 mm.
2. If gap is under 0,5 mm, go on with step 9. If gap is above 0,5 mm follow step 3.
3. Dismount hexagonal screws (10), washers (11) and remove cover plate (12).
4. Loosen hexagonal bolts (7).
5. There are four type of shims (1..4) that could be used to align.
   Measured distance shall be filled up underneath the slide bearing (5) with shims on top of the existing shims until gap between side bearing and outer body is between 0 and 0.5 mm.
6. Tighten hexagonal nuts (9) with a torque wrench according values table 1.
7. Repeat this procedure for the opposite side if necessary.
8. Place cover plate (12) and mount hexagonal screws (10) and washers (11).
9. This alignment procedure shall be executed on both swivels (2L and 2R).
10. Follow Kanon instruction “002-006-001-00 Exchange product seal swivel joint 2L & 2R”.

1.0 Introduction

This instruction is intended for:

- Service engineers Kanon Loading Equipment BV.
- Service crews assigned by Kanon Loading Equipment BV.

This instruction applies when:

- Leakage of product
- Product seals are scheduled for replacement.

2.0 Preparations

2.1 Safety

Read document “002-001-000-00, General safety requirements MLA” section 2 thoroughly.

DANGER; The MLA must be depressurized and flushed before start of the work. See document “002-006-037-00 purging and flushing CNG loading arm” in section 3.

WARNING; not following the steps described in this instruction may result in serious injuries and damaged equipment.

WARNING; locking devices shall be locked during this procedure. See document “”002-003-000-00 Locking device and maintenance device inboard, description and operating” in section 3 of this manual.

CAUTION; the maintenance area will be approved by the Kanon service engineer. Only personnel approved by the Kanon service engineer may enter this area.

CAUTION; 2 strong blocks to be inserted between the lifted flange and the outer body.

2.2 General

The swivel joint at the riser is to be equipped with four guiding bolts (image 1), which will guarantee the correct position of the flange while replacing the product seal.

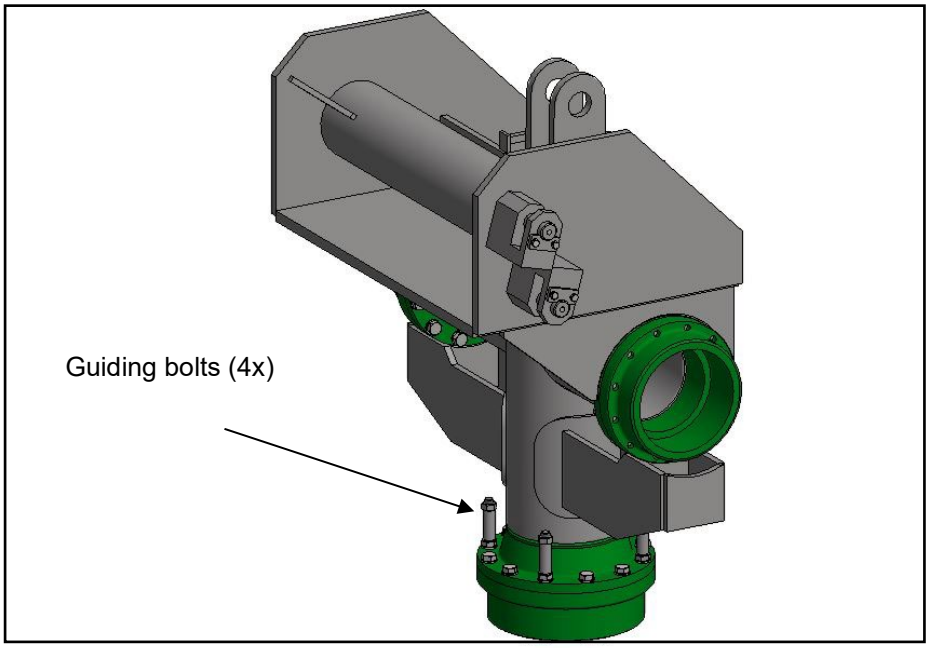

image 1

Check that the parts are present (image 3).
Ask the Kanon Loading Equipment Service Department if parts are missing or when in doubt at: +31 36 52 19 777.

2.4 Tools required

- Lifting bridge
- Crane
- Cherry picker or scaffold
- Chain hoist
- Double leg web sling
- Strong blocks
- General toolbox
- Torque wrench
- Slide hammer
- Eaton anti block grease to avoid gripping and to reduce friction
- Loctite 270

2.5 lifting bridge

Before replacing the product seal, the lifting bridge shall be installed by the crane. For mounting the lifting bridge see document “002-006-006-00, Instructions for lifting bridge” in section 6.

3.0 Replacing the product seal

When the lifting bridge is mounted on top of the riser / heel, connect the chain hoist to the lifting bridge and hook it, with a double leg web sling, to the base plate (image 4).

Remove the pins of the hydraulic slewing cylinders, at the side of the riser, and slide the cylinders out of the blocks (image 2).

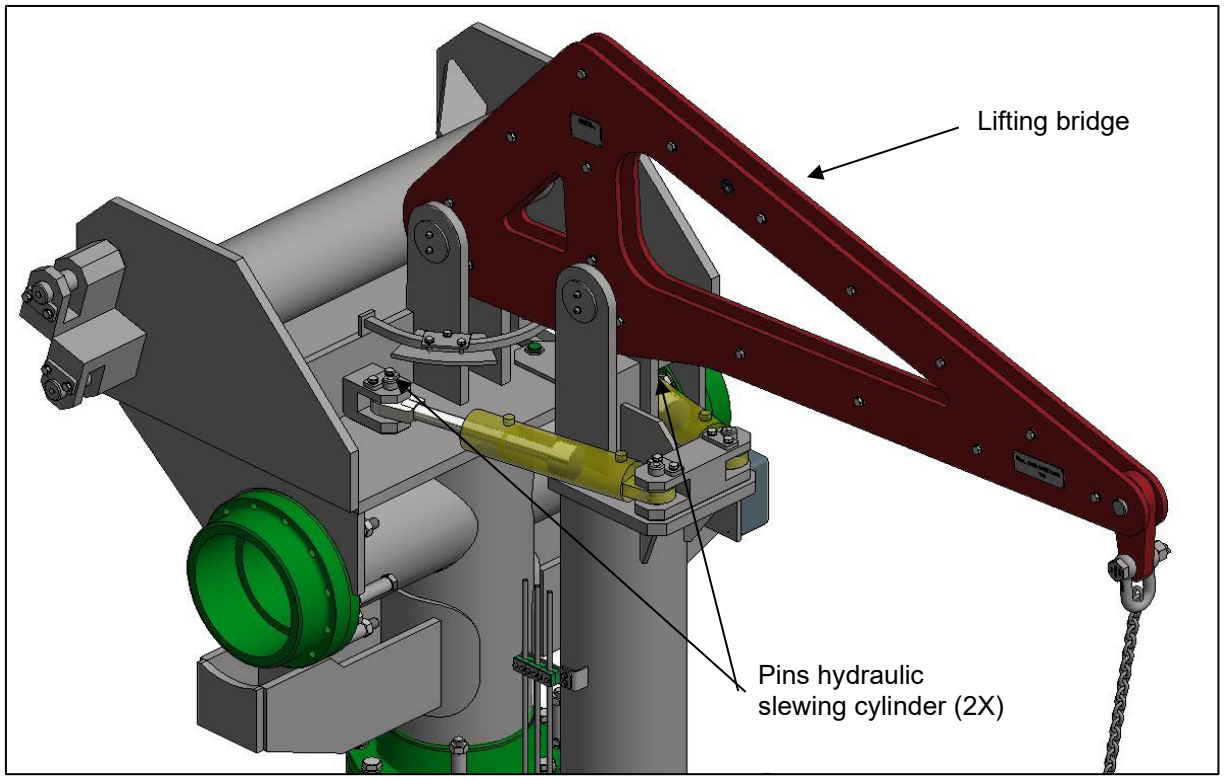

image 2

The numbers in this procedure refer to the numbers mentioned in image 3.
Remove 4 bolts from the swivel and replace with guiding bolts (image 3)

Remove the other bolts and washers (6, 7) of the swivel joint.
Grease the guiding bolts with anti-block grease.

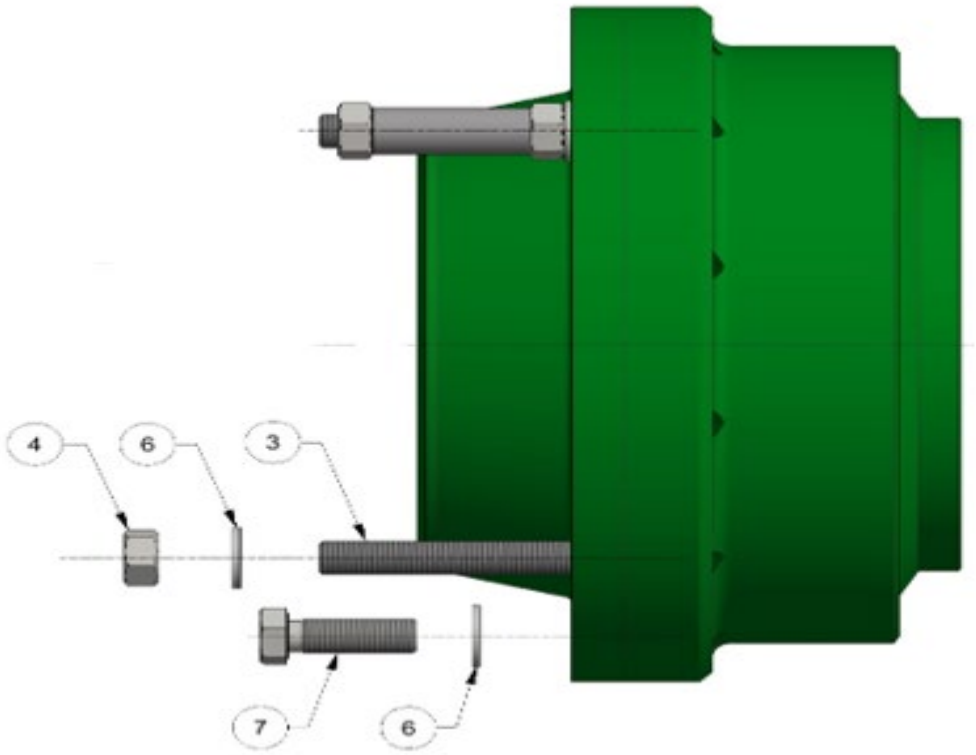

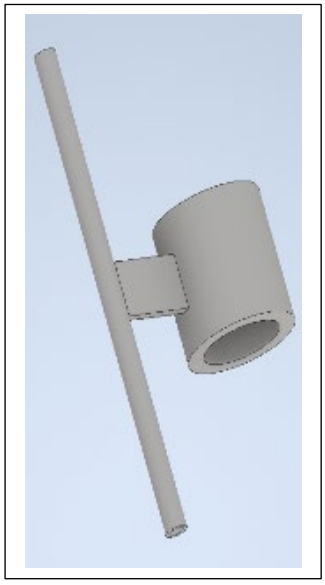

image 3

Lock the inboard arm with the locking device and pin maintenance device inboard (left and right).
Lock the locking device by moving the handles down.

Use the chain hoist to lift the MLA part (images 4 and 5).

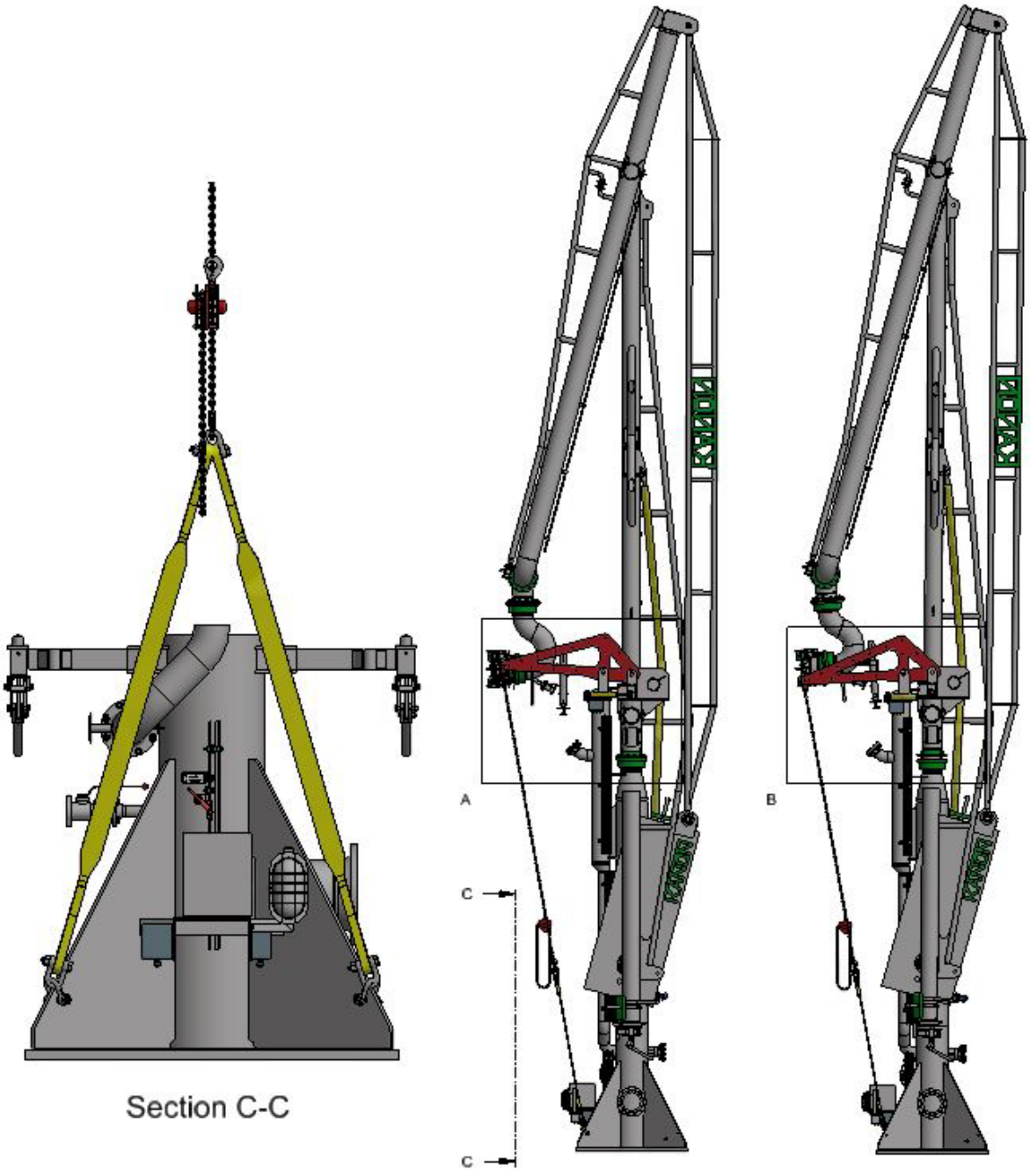

Image 4

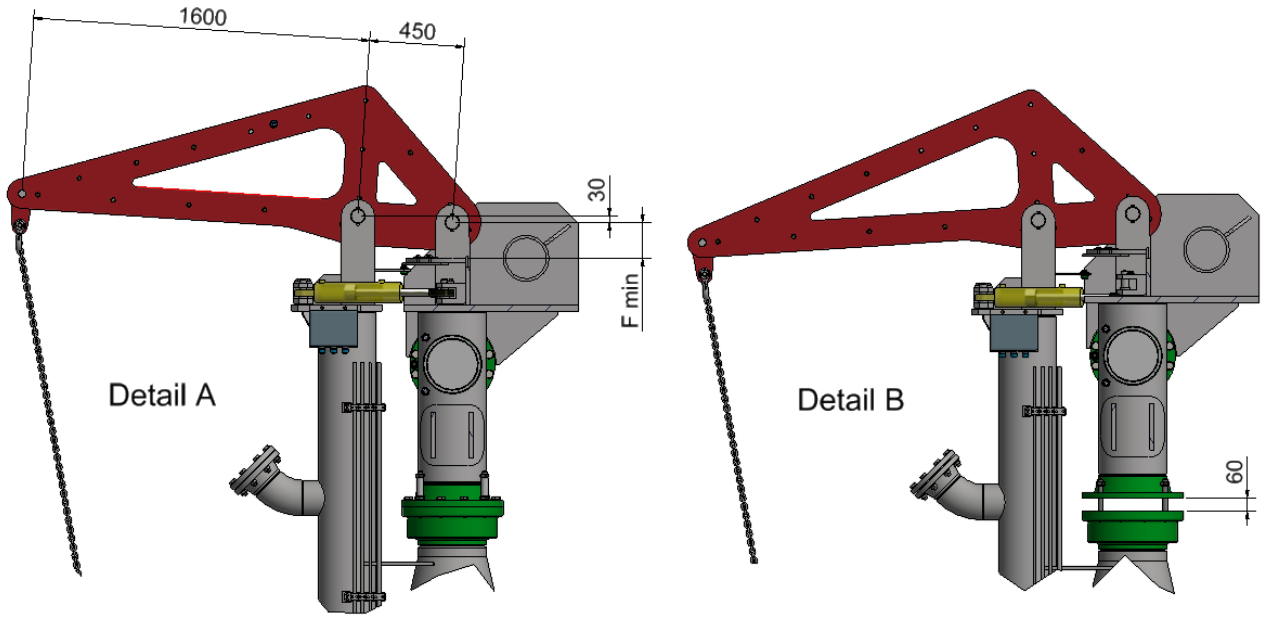

image 5

CAUTION; 60 mm is the maximum allowed gap between outer body and flange! (figure 5, Detail B).

Place 2 strong blocks between the lifted flange and the outer body (image 3 and 6).
Now the swivel joint is accessible for repair or seal replacing.
Remove the product seal and clean the seal chambers with Scotch-Brite or similar and check for scratches.
Clean the seal chambers and seal faces with a solvent.
Place the new product seal.

NOTE; to tighten bolts and nuts see document “000-000-002-00, General requirements for tighten bolts and nuts” in section 2.

After placing the new product seal, remove the strong blocks between the flange and the outer body (figure 6).
Lower the MLA part.
Remount in reverse and remove the lifting bridge.

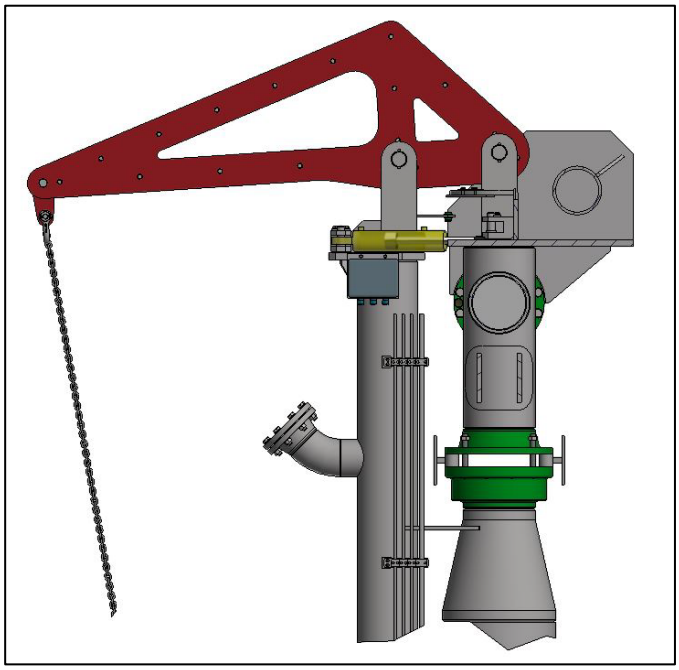

Image 6

Kanon advises to do a leak test See Manufacturing Data Report, Section 6 “Test procedures and results”, document “P242068A10-1S”. When the site commissioning tests have been done the MLA is ready for use.

NOTE; in case of any doubt please contact the Kanon Loading Equipment Service Department, at: +31 36 52 19 777.

Introduction:

This instruction is intended for:
-Kanon loading equipment Service engineers.
-Service engineers assigned by Kanon Loading equipment.

This instruction applies when:
-There is a leakage of product.
-Product seals are scheduled for replacement.

Preparations:

Safety:
Read document “002-001-000-00 General safety requirements MLA” section 2.

The MLA shall be depressurised, drained and flushed see instruction “002-006-037-00 purging and flushing of the CNG Loading arm” in section 3.

Locking devices shall be locked during this procedure.As per instruction “002-003-000-00 locking device and maintenance device inboard, description and operating” in section 3.

Maintenance area will be approved or set by the Kanon Service Engineer
Only persons approved by the service engineer may enter this area.

2 strong blocks shall be inserted between the flange and the body.

-

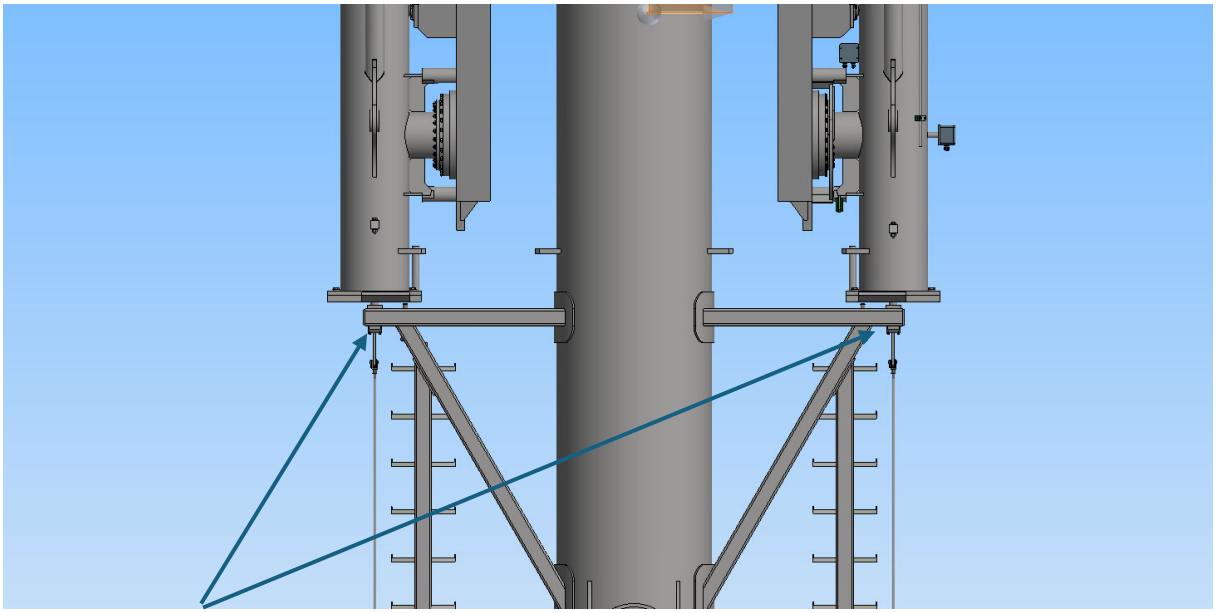

locking the inboard to the riser.

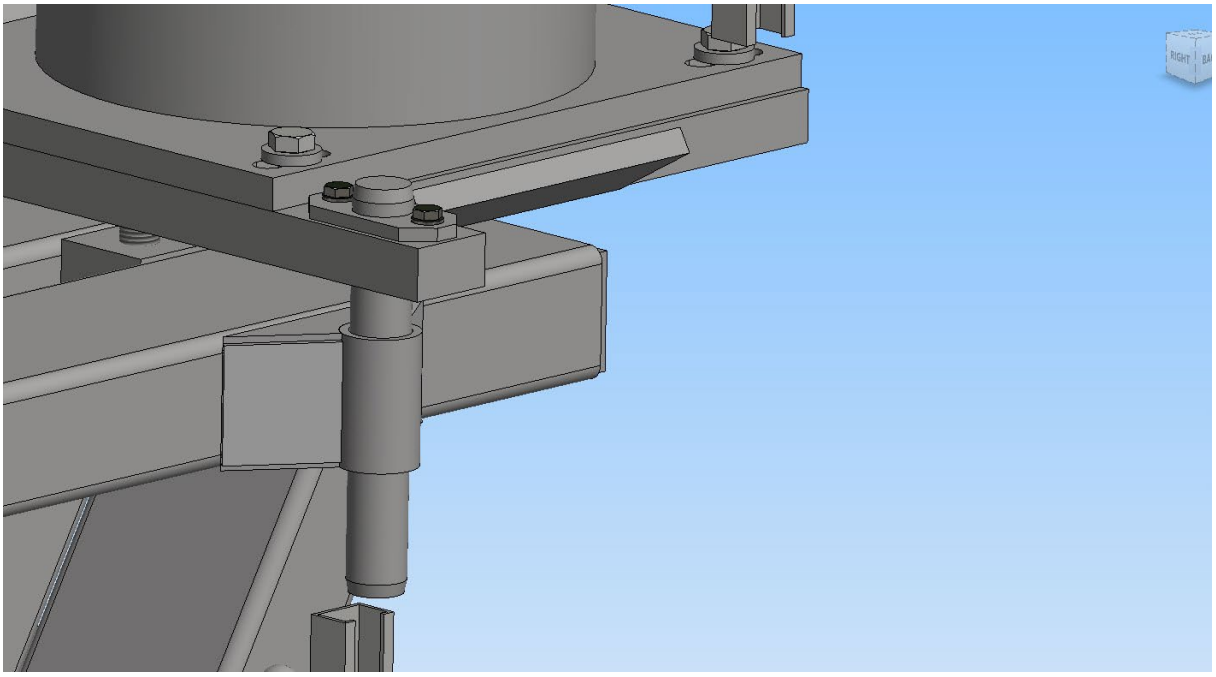

Pin maintenance device in reversed position. (safety pin)

Not everything can be done from the service ladder.

Use a cherry picker or scaffold.

Secure the work area on the ground. (dropped objects)

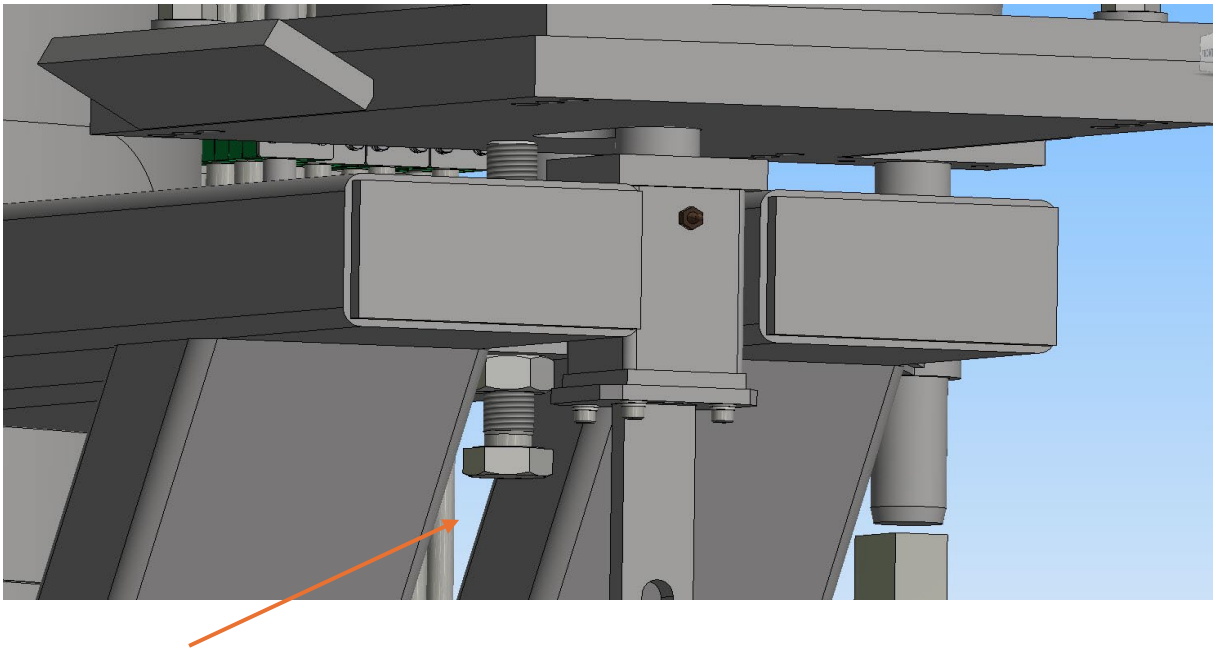

Locking the stay bolt in place.

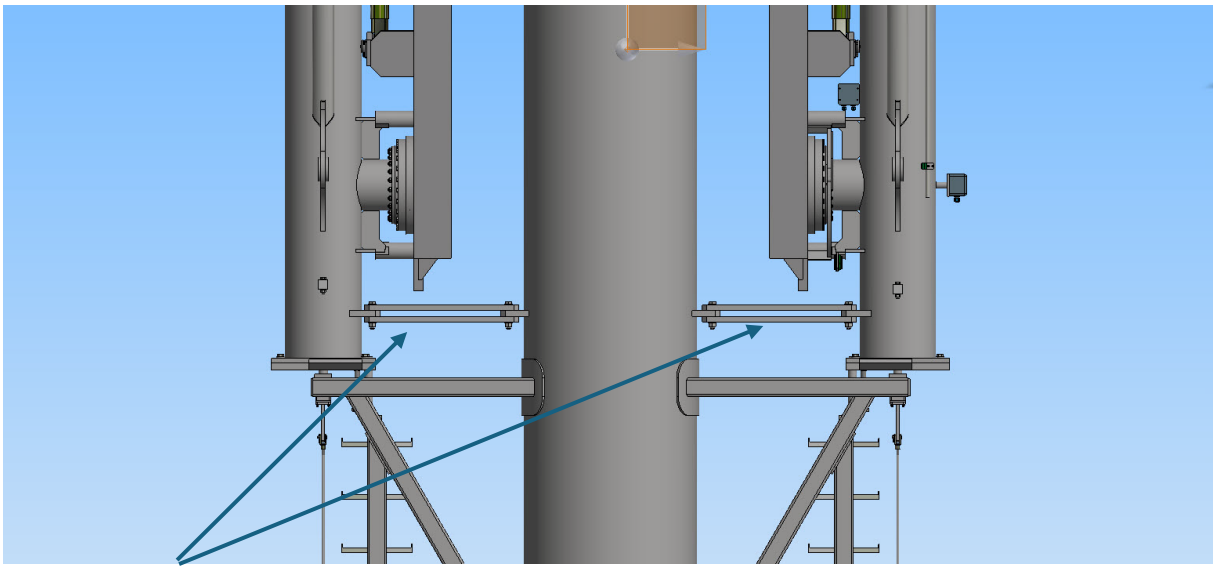

Place the locking strips.

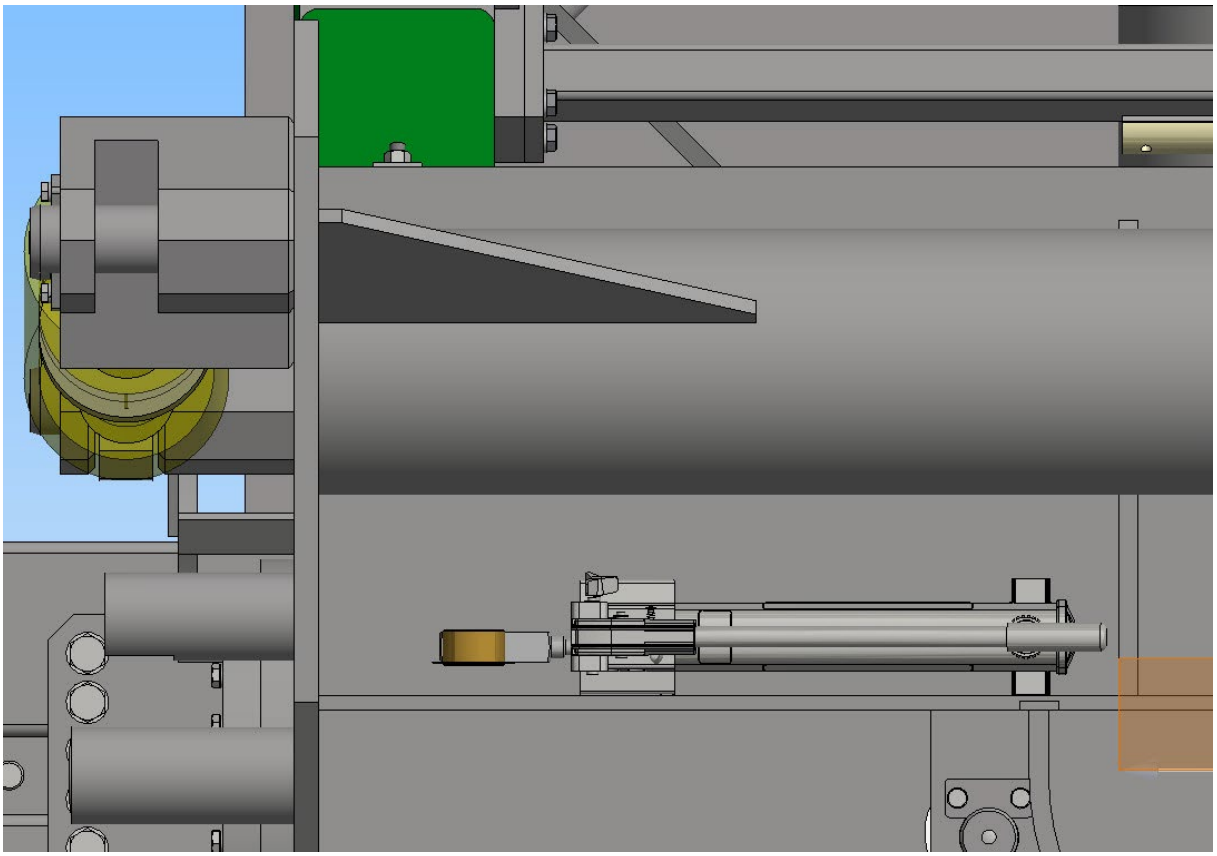

Location of the hydraulic press on the heel.

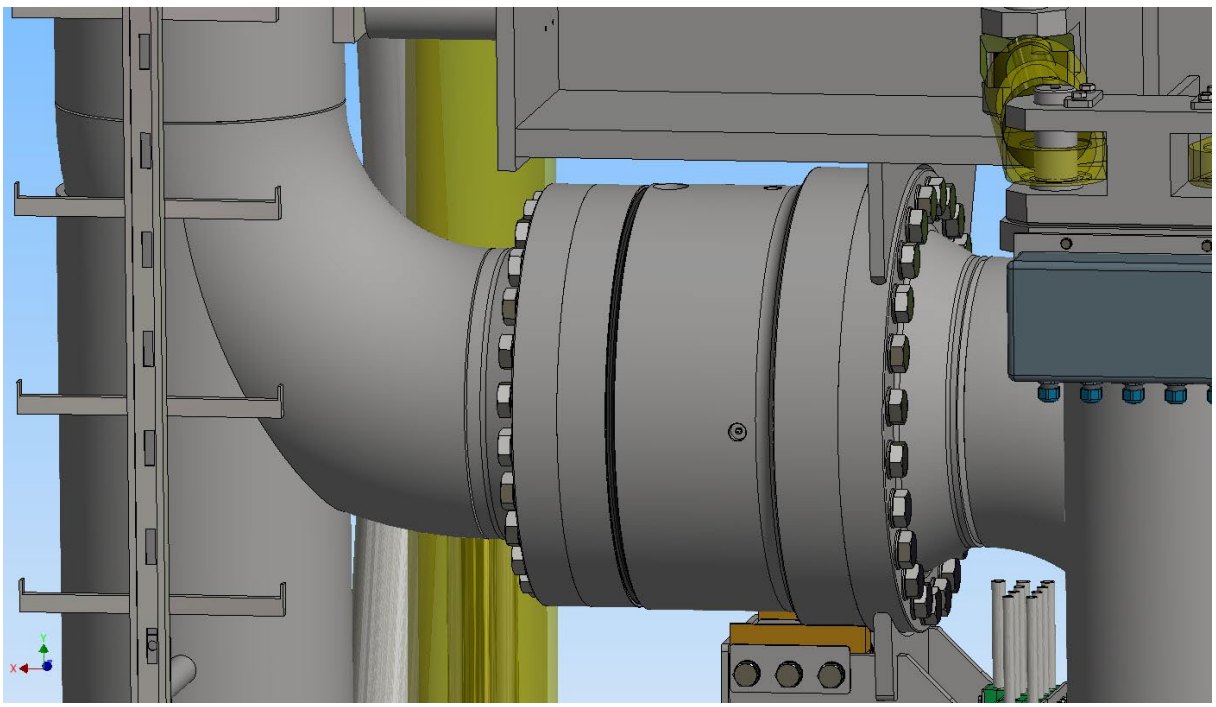

Swivel 2

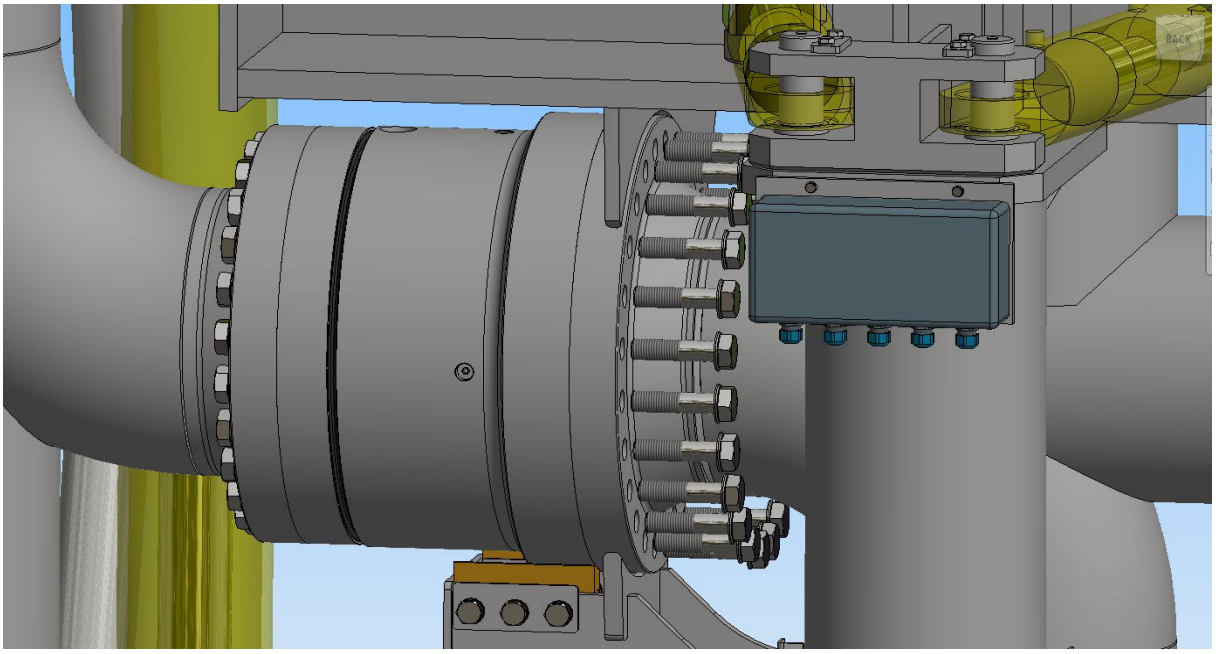

First we need to replace the 4 lowest bolts by 4 guiding bolts. These must extend 60 mm after being fitted. Than all other bolts can be removed.

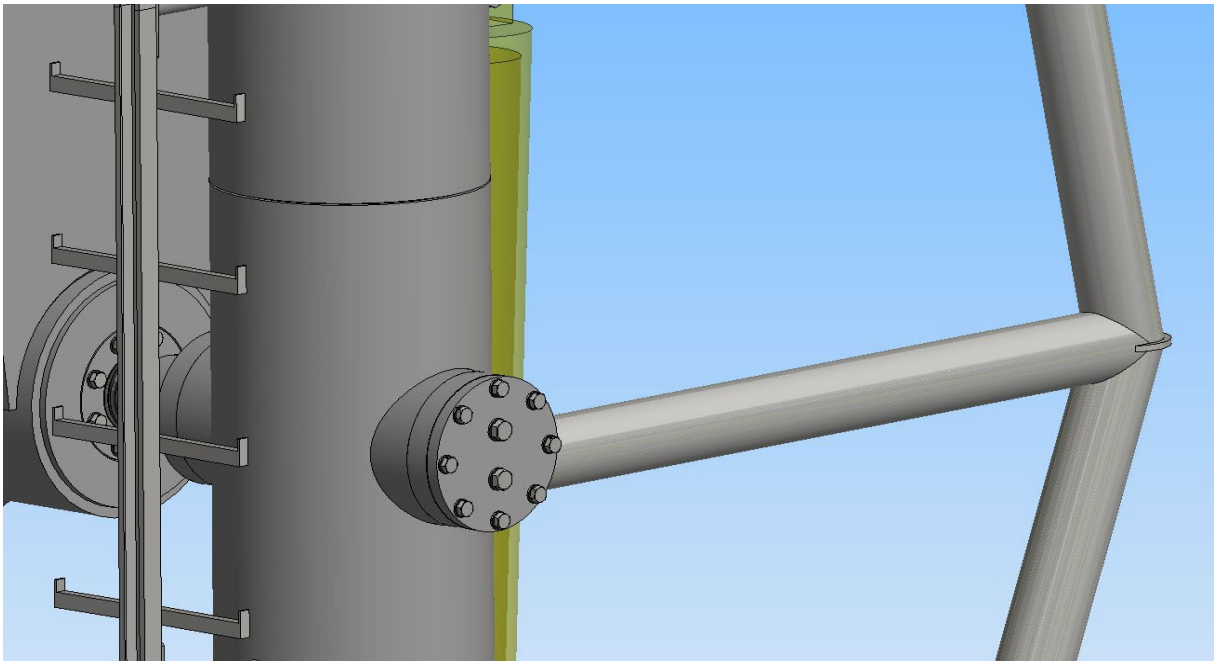

Bearing cover.

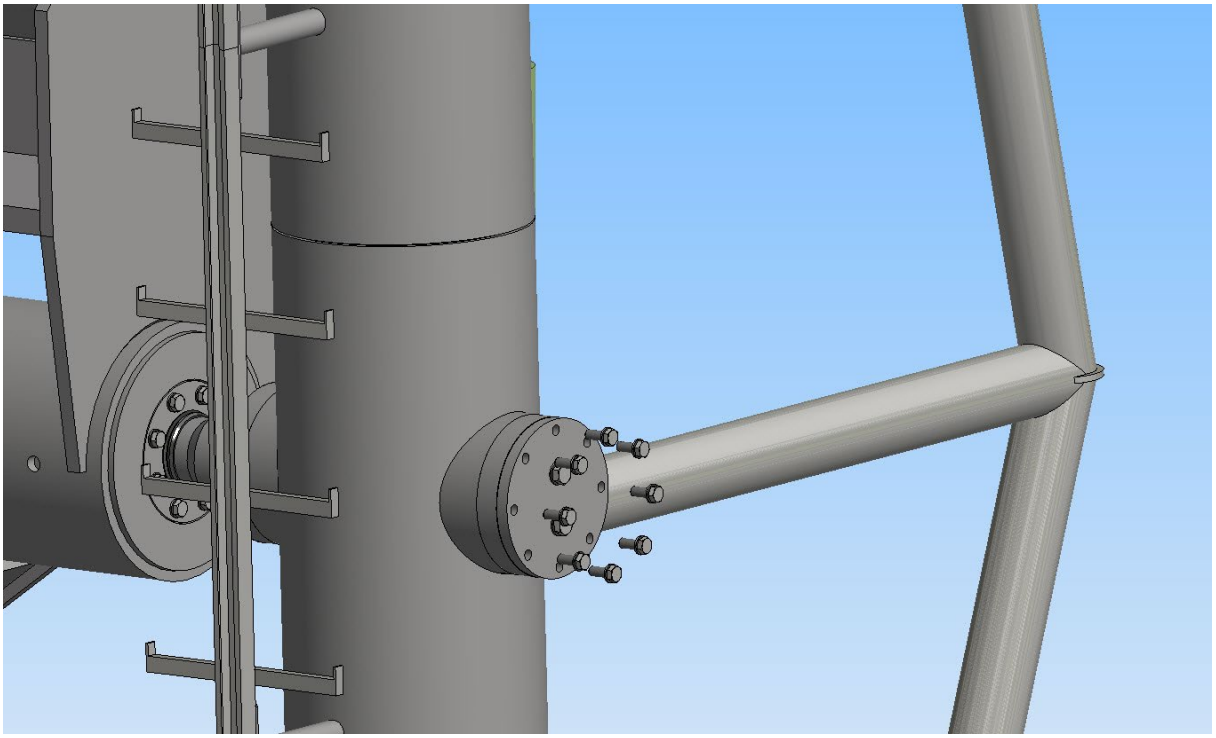

Bearing cover removed.

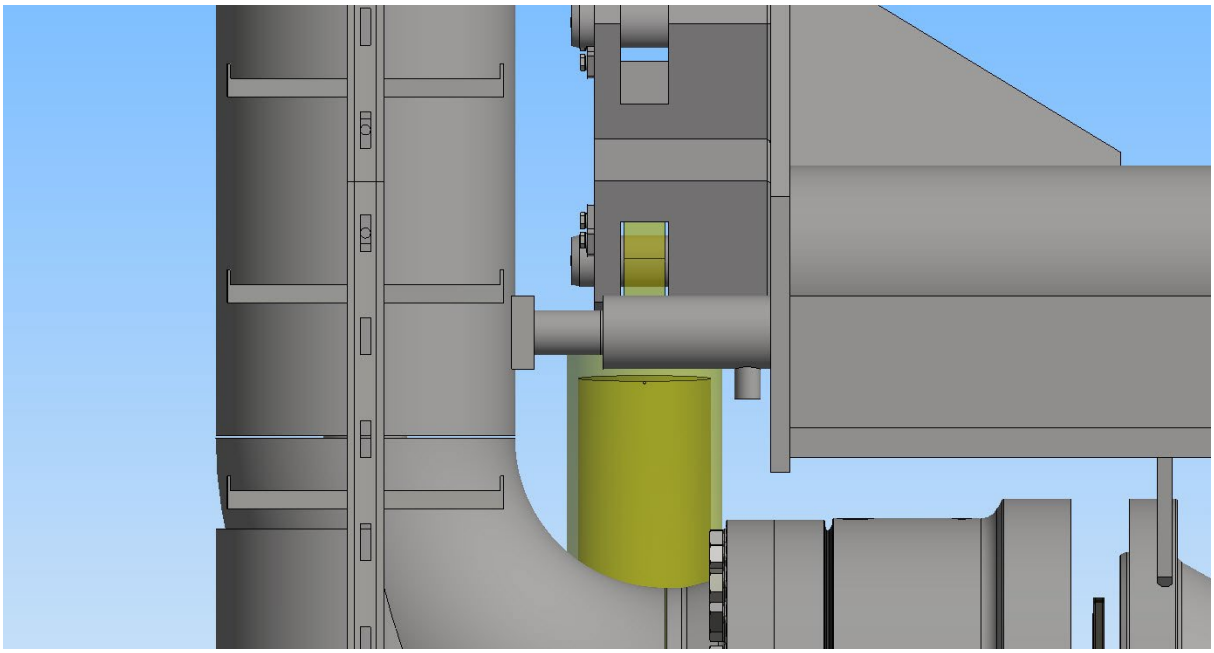

Opening the swivel using the hydraulic press.

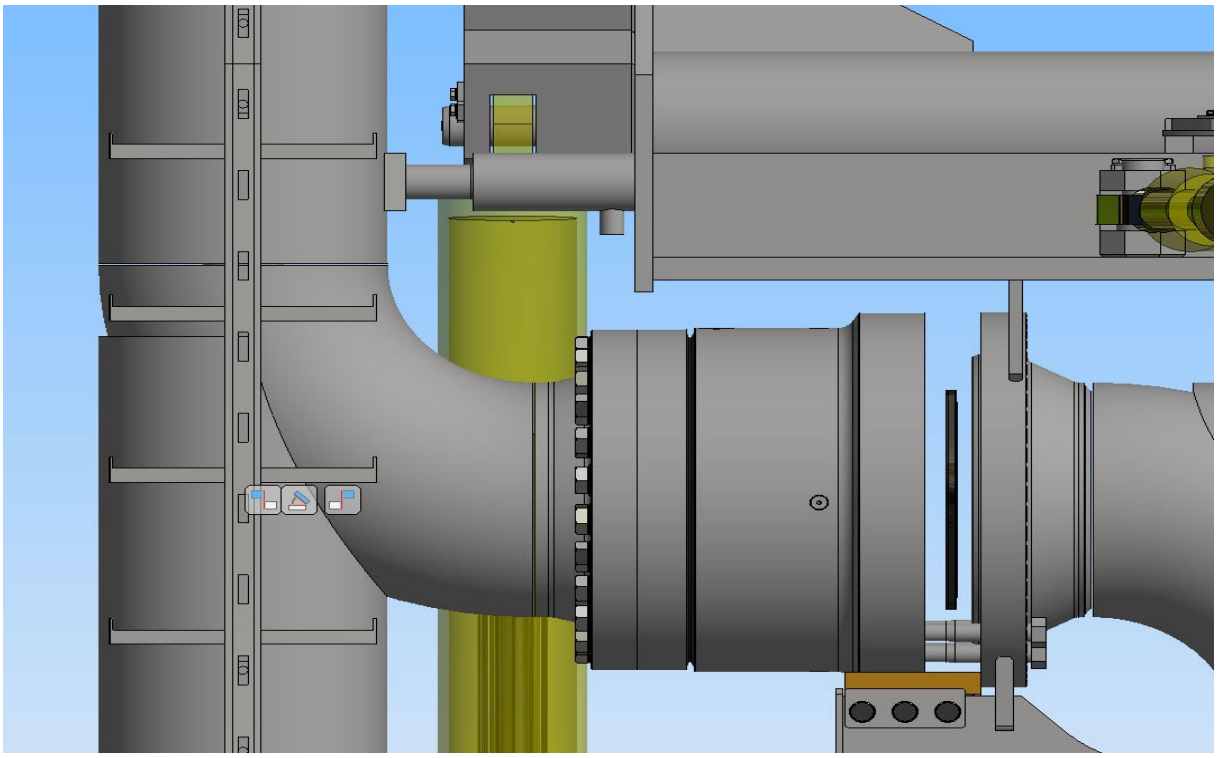

Maximum opening (60 mm) limited by the 4 bolts.

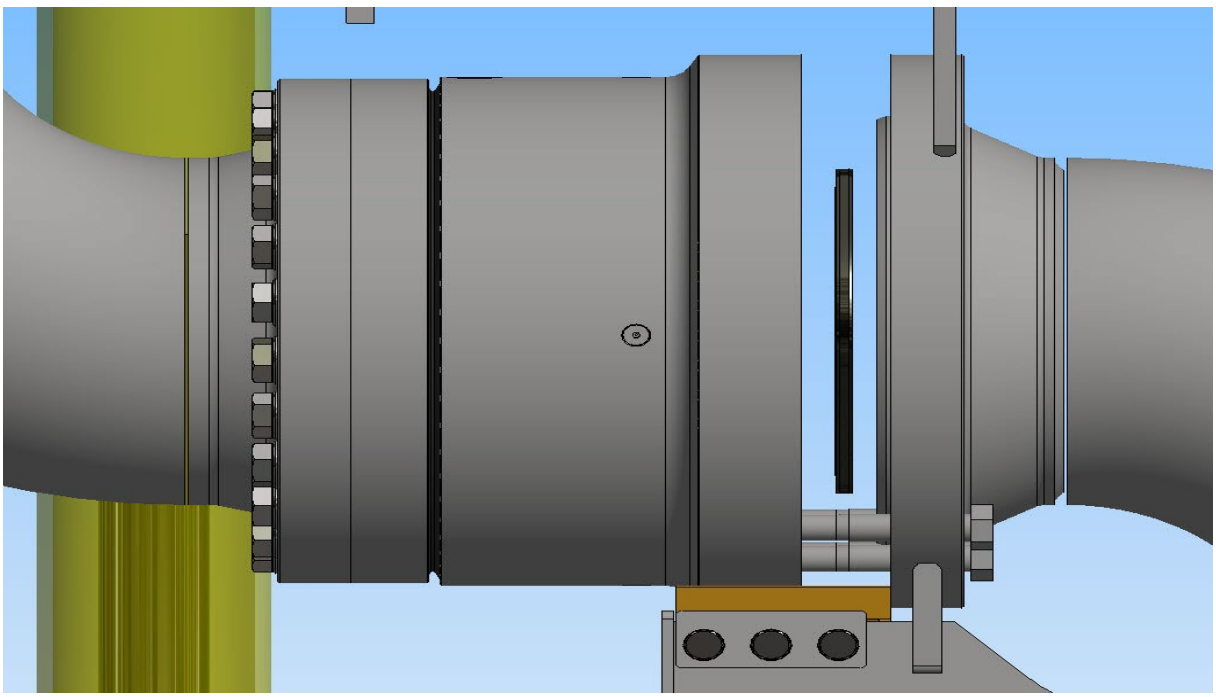

Opening and the new seal after inspection and cleaning.

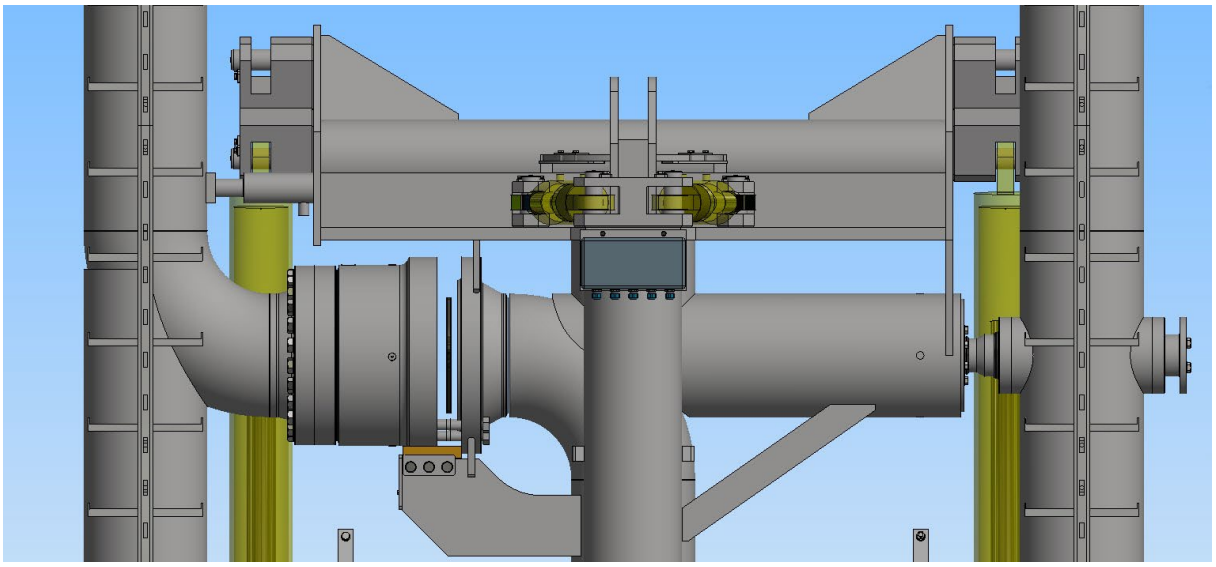

Overview

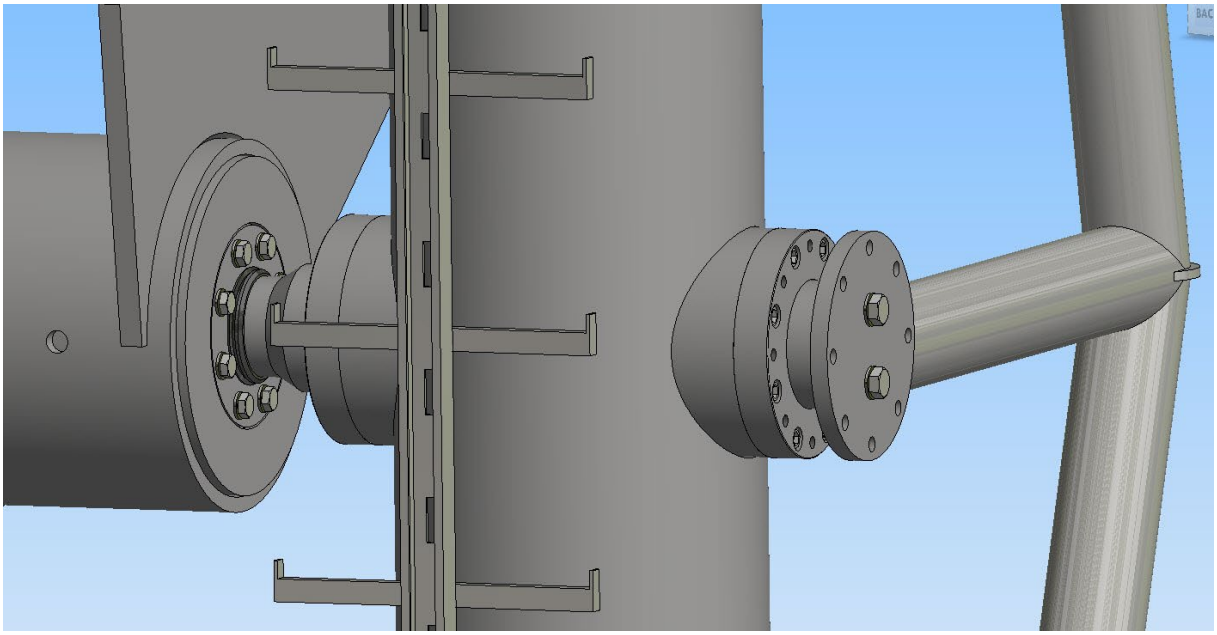

Bearing.

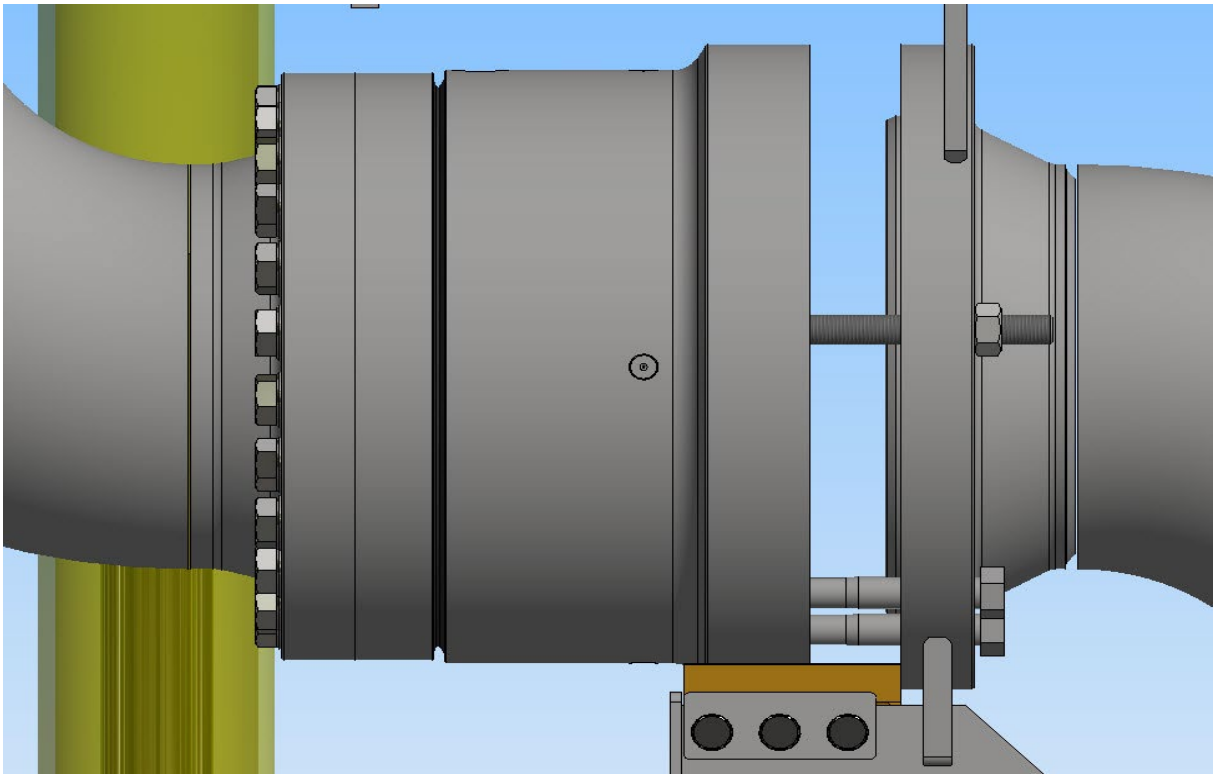

2 threaded ends placed diagonally and pressure released from the hydraulic press.

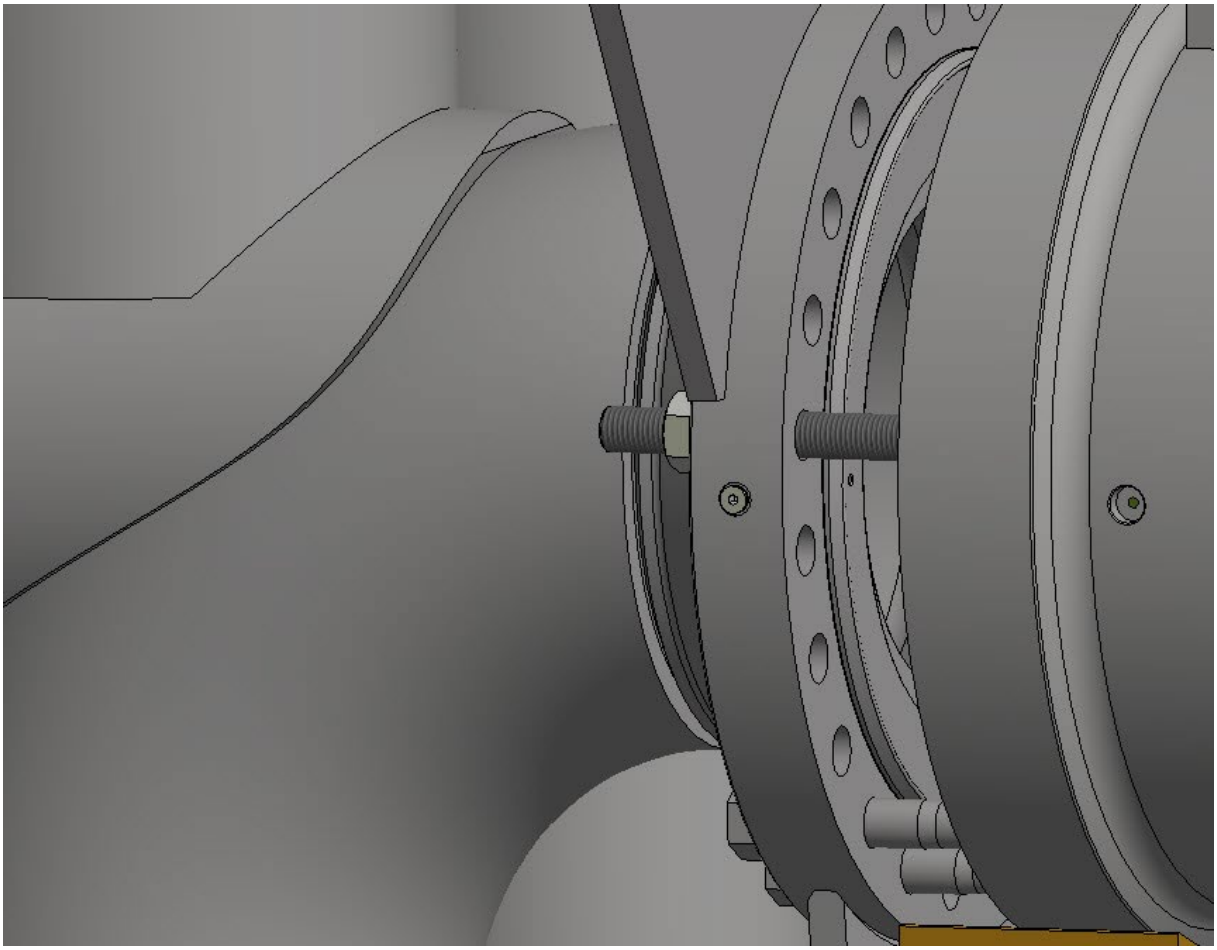

Tighten both threaded ends alternately for an even closure.

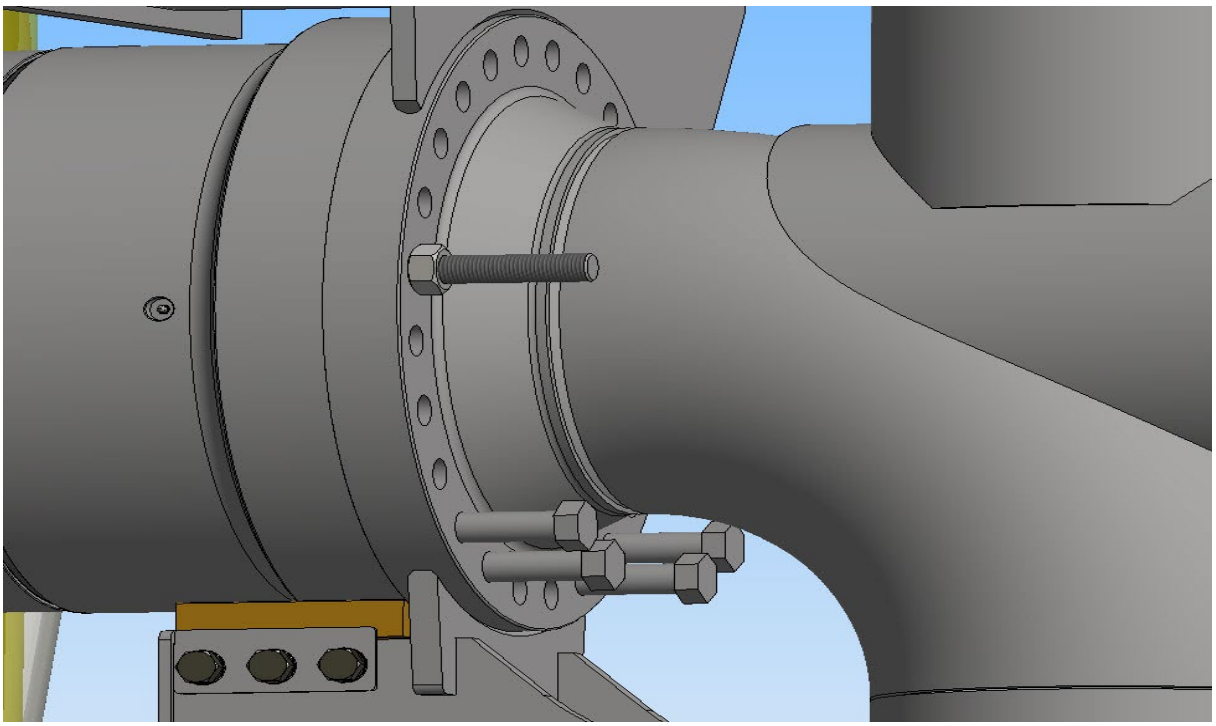

Swivel closed and the threaded ends can be removed. Guiding bolts not yet!

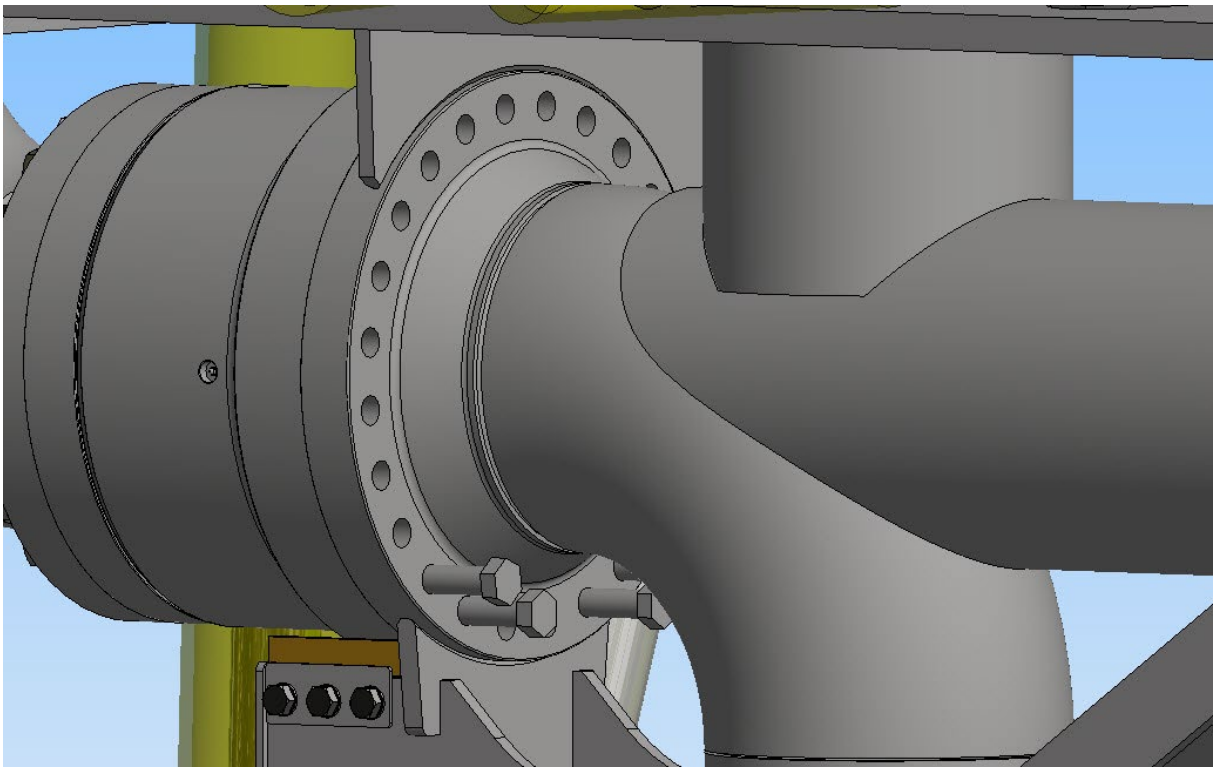

Threaded ends removed.

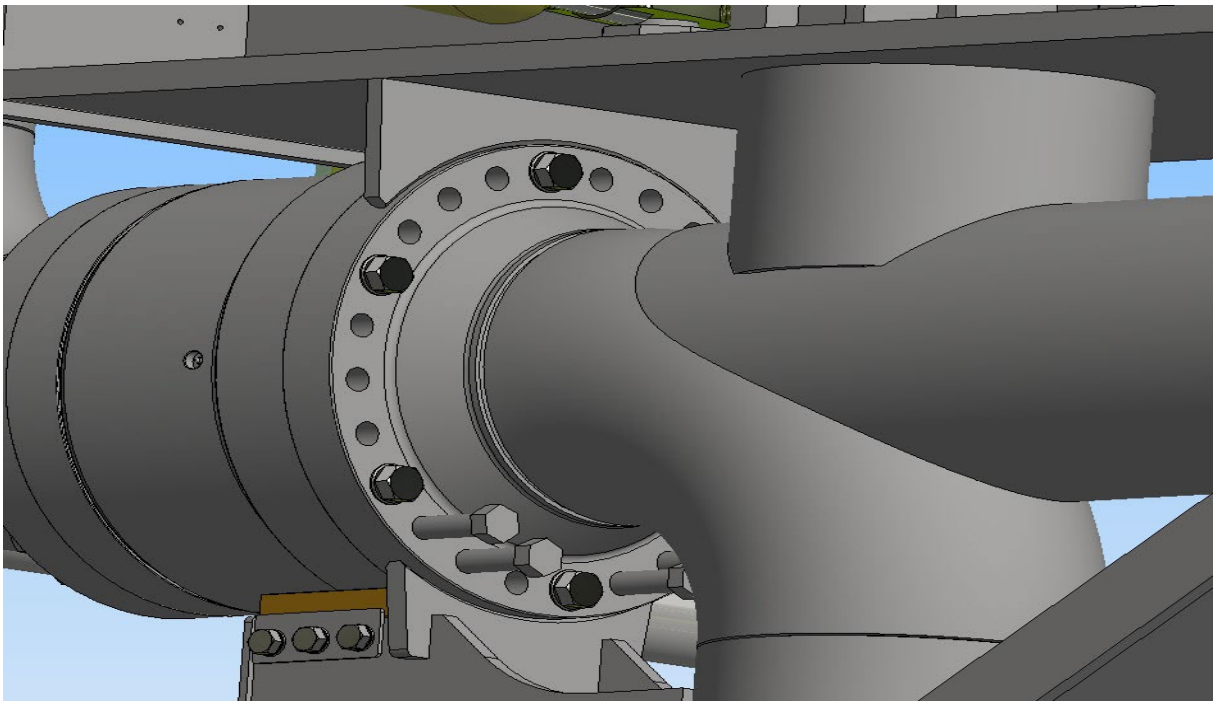

First bolts fitted in the circumference.

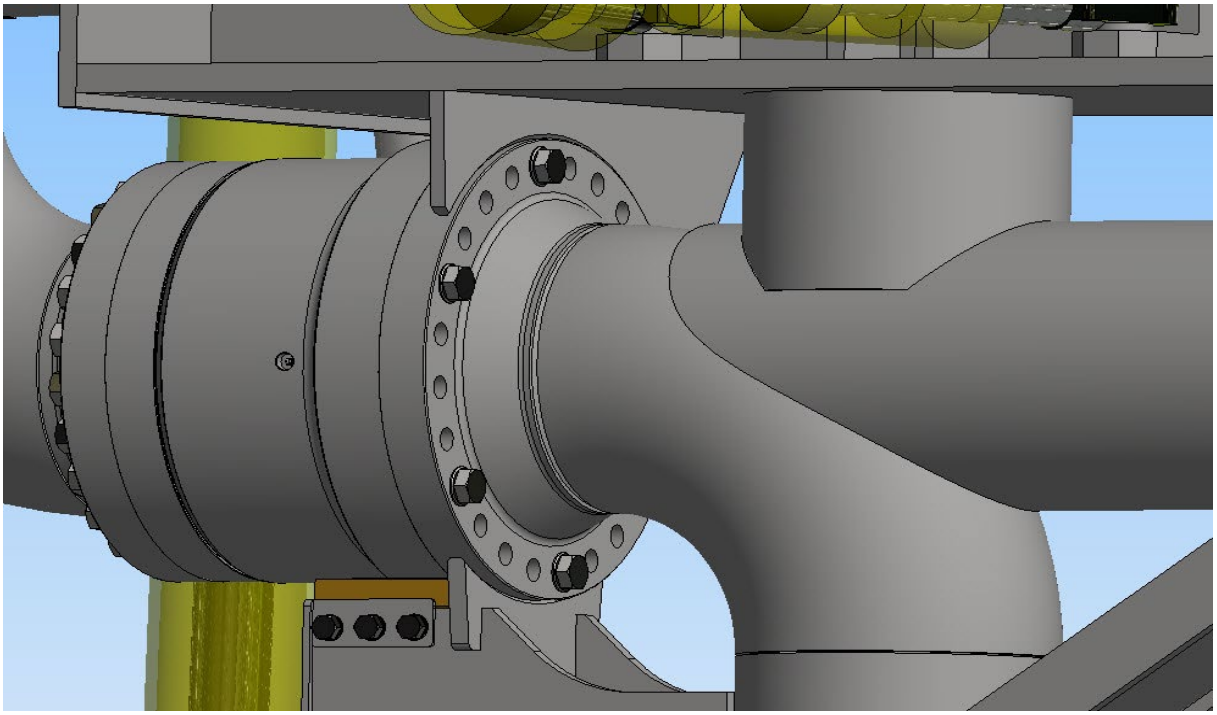

Guiding bolts removed.

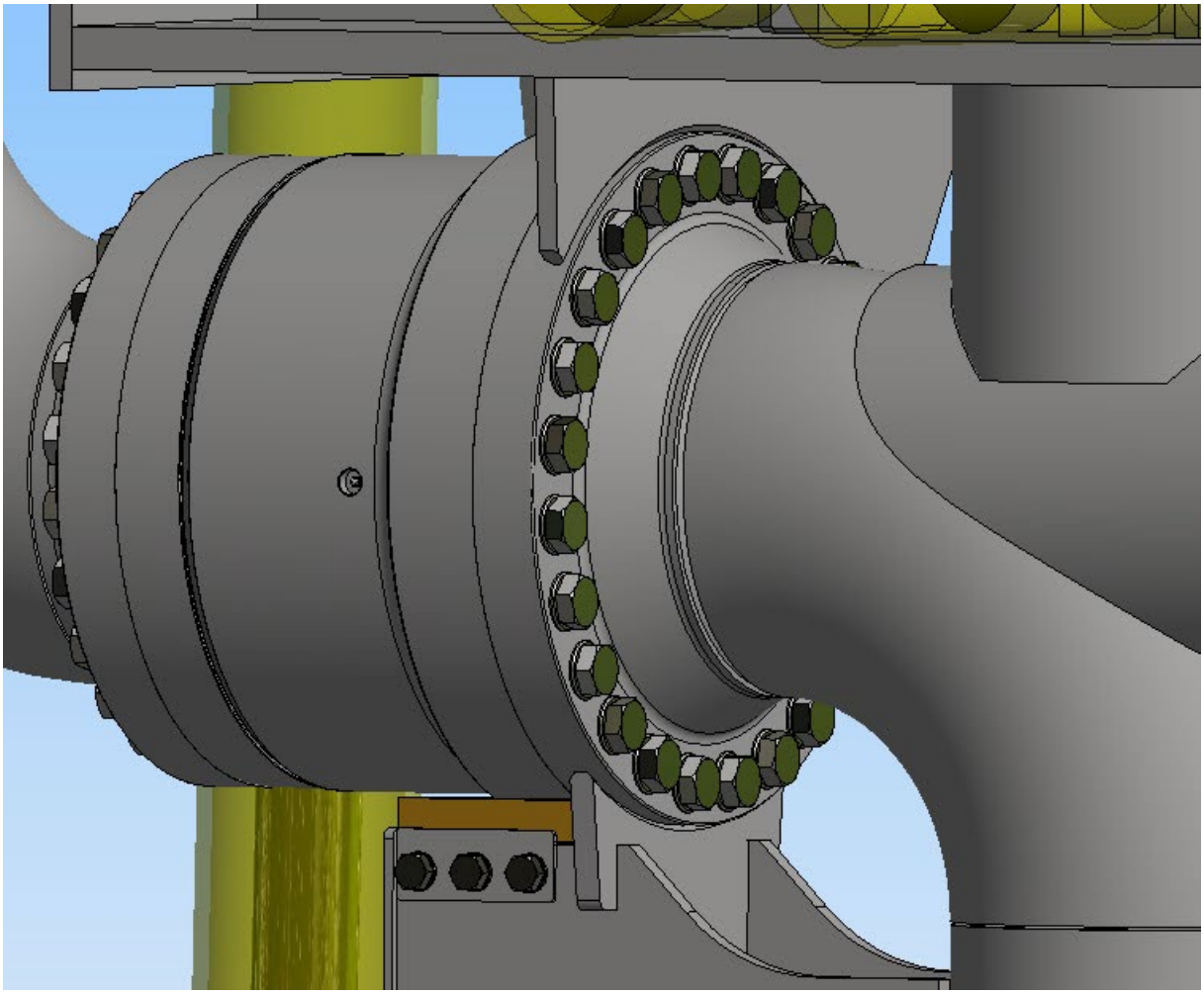

All bolts fitted and torqued at 1560Nm as per instruction 000-000-002-00 “general requirements for tightening nuts and bolts” in section 2. After this a pressure test needs to be performed and the MLA can return to service after a pass on the pressure test.

1.0 Introduction

This instruction shows the position of the MLA during inspection and/or maintenance of the swivels 4, 5 and 6.
The triple shall be manoeuvred to the riser as close as possible.
At the height where it can be reached by a maintenance engineer when standing on the jetty.
If desired have a scaffold build for a convenient working height for swivels 4 and 5.

This instruction is intended for:

- Kanon service engineers
- Site maintenance crews.

2.0 Procedure

1. Manoeuvre MLA to maintenance position, as shown in figure 1.
   Follow instructions in section “Operating instructions” of this manual.

2. Activate the hydraulic lock with the hand levers on the riser, turn off the HPP and lock the start switch of the MLA control and the main power switch.

WARNING; before starting any work, please check the MLA is hydraulically locked, the HPP is turned off and the start switch and the main power switch of the MLA control are locked.

WARNING; Make sure the MLA is purged and flushed as described in “002-006-037-00 Purging and flushing CNG loading arm".

NOTE; in case of any doubt please contact the Kanon Loading Equipment Service Department at +31 36 52 19 777.

Replace 4 bolts in the circumference with guiding bolts and separate the swivel as described in instruction “002-006-035-00 Replacing product seal swivel 2 MLA 270”

Using a small crane to assist in lifting and sewing.

Replace the seal and close the swivel as per mentioned instruction.

Do a pressure test and if ok return the MLA to the stored position.

The MLA is ready to return to service.

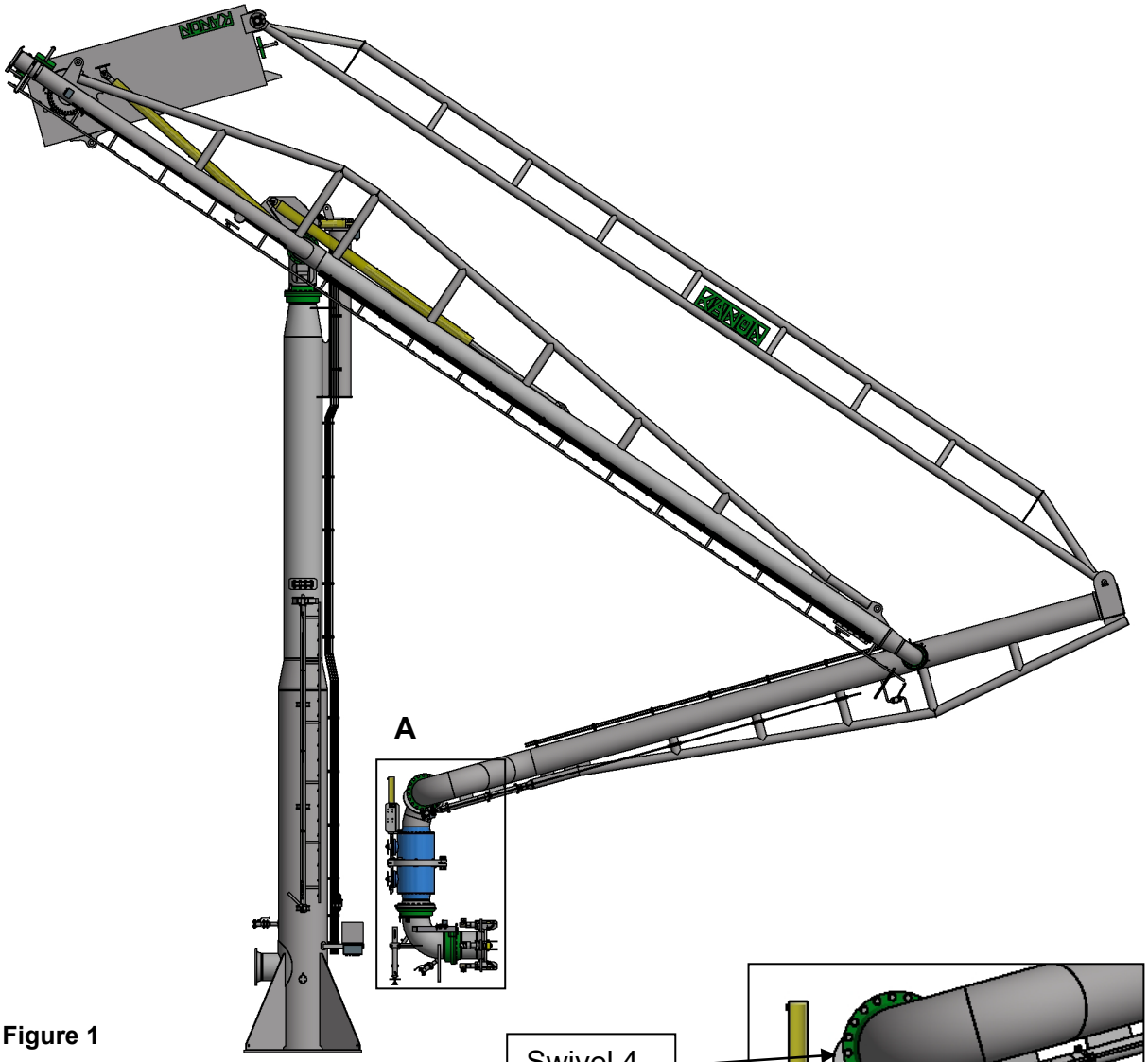

Figure 1

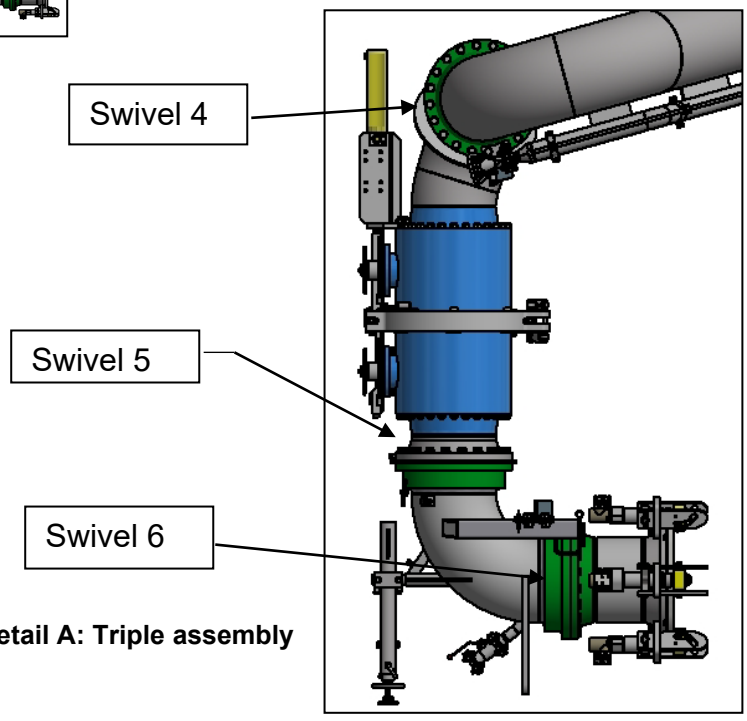

Detail A: Triple assembly

KANON
LOADING EQUIPMENT

Installation, Operating and Maintenance manual

Section 7

Reference drawings

We,

Manufacturer : **Kanon Loading Equipment B.V.**
Address : **Edisonweg 27, 3899 AZ Zeewolde, The Netherlands**

Hereby declare that the drawings included in this manual are drawings as built. All drawings have been checked thoroughly. When during fabrication alterations have been made to the design, the production drawings have been replaced by a revised drawing as built.

F.Willemsen
Engineering manager

R. Nijhuis
Quality Inspector

Design data

Medium	:	CNG
Design pressure	:	0-77 barg
Design temperature	:	-19°C/+80°C
Operating pressure	:	40-70 barg
Operating temperature	:	5°C/25°C
Flow rate / speed	:	375 MMSCFD @ 70 bar = 16.1m/s
Flow rate / speed	:	375 MMSCFD @ 40 bar = 28.2m/s
Area classification	:	ATEX 2G IIB, T3
Corrosion allowance	:	1,5 mm
Wind speed stored	:	45 m/s
Wind speed operating	:	22 m/s
Design code	:	ASME B31.3-2020 Normal fluid service / OCIMF 4th edition 2019.

Main materials

Pipes	:	ASTM A-106 Gr B
Elbows, t-pieces, reducers	:	ASTM A-234 Gr WPB
Flanges	:	ASTM A-105
Plates pressure holding	:	P355NH
Plates structural	:	S355J2
Swiveljoint innerbody	:	W Nr. 1.4462
Swiveljoint outerbody	:	W Nr. 1.6582
Swiveljoint flange	:	ASTM A-105

Test & Inspection

Test and inspection	:	See P242068-TIP

Surface Preparation

: See procedure / certificate P242068-2R

Grease type

Ball race swiveljoint	:	Almaplex 1299
Sealface swiveljoint	:	PFPE

KANON
LOADING EQUIPMENT
Edisonweg 27 Zeewolde NL
tel: +31 (0)36-5219777

CE

		FLUID GROUP	: 1
FABR. NR.	: P242068	DESIGN PRESS.	: 0-77 barg
YEAR	: 2024	DESIGN TEMP.	: -19°C/+80°C
MODEL	: MLA270	OPER. PRESS.	: 40 barg
SIZE	: 16" 600#	OPER. TEMP.	: 5°C/+25°C
ID NR.	: P242068A10	TEST PRESS.	: 116 barg
	II 2 G	TEST DATE	: **/2024

FILE NO. KA13463

KANON
LOADING EQUIPMENT
Edisonweg 27 Zeewolde NL
tel: +31 (0)36-5219777

CE

		FLUID GROUP	: 1
FABR. NR.	: P242068	DESIGN PRESS.	: 0-77 barg
YEAR	: 2024	DESIGN TEMP.	: -19°C/+80°C
MODEL	: MLA270	OPER. PRESS.	: 40 barg
SIZE	: 16" 600#	OPER. TEMP.	: 5°C/+25°C
ID NR.	: P242068B10	TEST PRESS.	: 116 barg
	II 2 G	TEST DATE	: **/2024

FILE NO. KA13463

Revision 3			
Revision 2	15-01-2025	N.V.	Flowrate changed
Revision 1	20-11-2024	HFW	Design pressure changed to 77 Barg, flowrate/speed changed
Check	28/1/25		Length -and angle tolerances acc. to KGR 100-02-EX-EN, class C / Form -and place tolerances acc. to ISO 2768-2, class K / Roughness according to ISO 4287, Ra in µm / Units in mm
Drawn	17-10-2024	N.V.	
Scale:		A3	

KANON
LOADING EQUIPMENT
P.O. Box 385, 3840 AJ Harderwijk

Design data

2x MLA for CNG for SUMED PORT

American Projection

Drawing number: P242068A05

Revision: 2

\\fserver\Engineering\Projects\P242068\Engineering\Inventor\Drawings\A10\P242068A05.idw

This document is confidential and the information contained herein is a confidential disclosure. It is shown on the understanding it is not to be revealed to others or used for any other purpose without the written consent of KANON LOADING EQUIPMENT B.V.

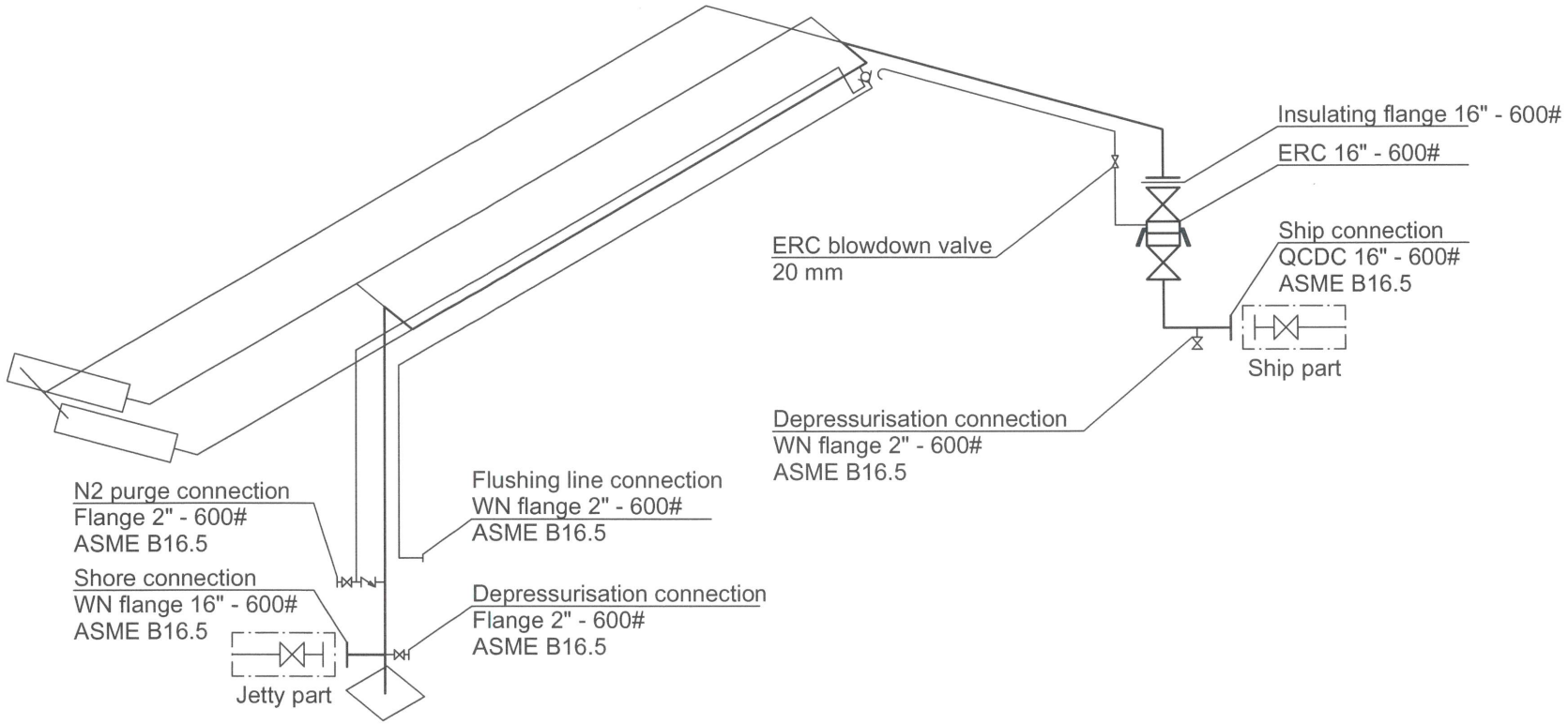

Emergency release system

- 1st stage alarm (ESD1) = valves on jetty and ship close (advised)
- 2nd stage alarm (ESD2) = valves of ERC close
- ERC valves are detected closed (3 proximity switches, Two out of three philosophical principles)
- ERC blowdown valves opens (Two valves for increased reliability)
- After 5 seconds QCDC clamping will be released.

Revision 3			
Revision 2	15-01-2025	N.V.	Flowrate changed
Revision 1	20-11-2024	HFW	Design pressure changed to 77 Barg, flowrate/speed changed
Check	20/1/25		Length -and angle tolerances acc. to KGR 100-02-EX-EN, class C / Form -and place tolerances acc. to ISO 2768-2, class K / Roughness according to ISO 4287, Ra in µm / Units in mm
Drawn	17-10-2024	N.V.	
Scale:		A3	

KANON LOADING EQUIPMENT
P.O. Box 385, 3840 AJ Harderwijk

Design data

2x MLA for CNG for SUMED PORT

American Projection

Drawing number P242068A05

Revision 2

\\fserver\Engineering\Projects\P242068\Engineering\Inventor\Drawings\A10\P242068A05.idw

This document is confidential and the information contained herein is a confidential disclosure. It is shown on the understanding it is not to be revealed to others or used for any other purpose without the written consent of KANON LOADING EQUIPMENT B.V.

Sea side

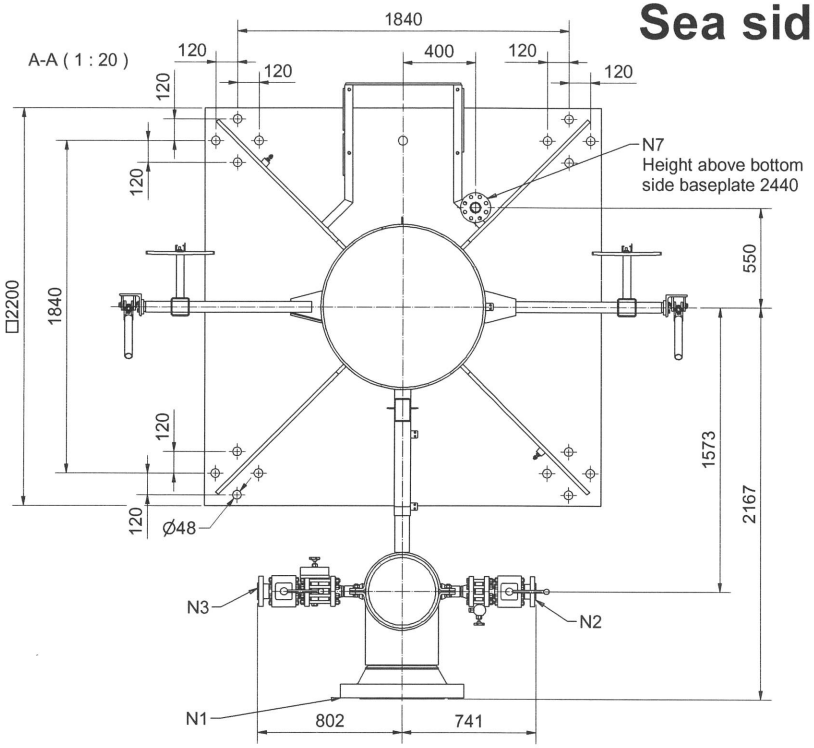

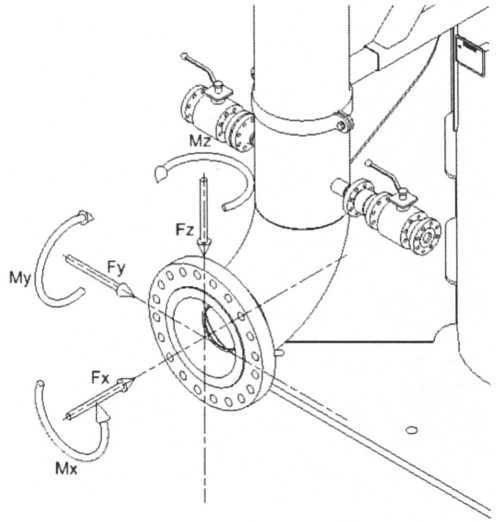

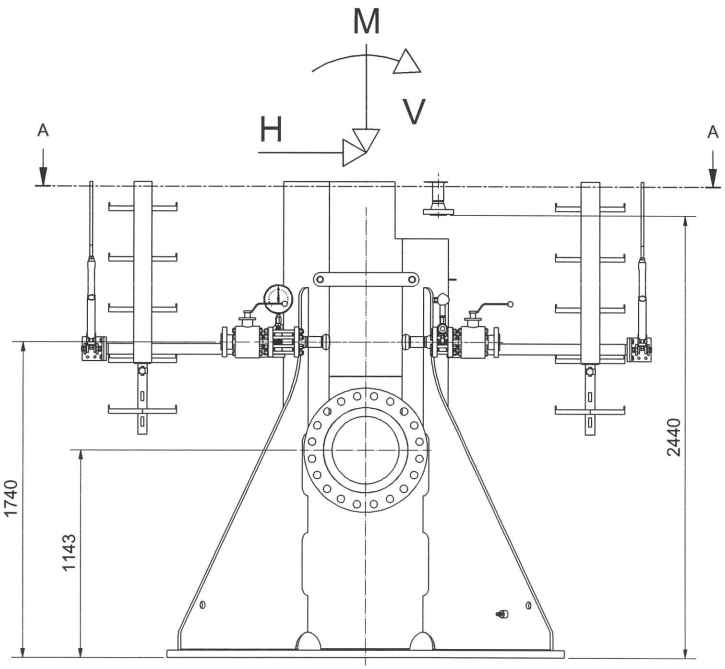

Loading arm no.	Nozzle		Nozzle loads					
	N1		Force loads (N)			Moments loads (Nm)		
	NPS	DN	Fx	Fy	Fz	Mx	My	Mz
P242068A10	16"	400	216	-1455	1427	-14354	334	-6873

Marine Loading Arm Connections				
Nozzle:	Description:	Size:	Acc. to norm:	Additional remarks:
N1	Shore connection CNG	Wn flange 16" - 600#	ASME B16.5	
N2	Depress. conn. (riser)	Wn Flange 2" - 600#	ASME B16.5	
N3	N2 Purge connection	Wn Flange 2" - 600#	ASME B16.5	Incl NRV
N7	Flush connection	Wn flange 2" - 600#	ASME B16.5	

Maximum loads at the baseplate of the loading arm:
- Without extra safety factors.
- V [kN] deadload (DL) and fluid load (FL).
- H [kN] windload (WL) worst direction.
- M [kNm] windload (WL) worst direction and earthquake load (EL).

For design data see drawing: P242068A05

Ident. no.	Tag no.	Rating	V (kN)	H (kN)	M (kNm)	MLA length (m)
P242068A10	TBA	16" 600#	522	64	1050	16 x 7,5 x 8

Revision 5	25-02-2025	HFW	Changed connection N2 and N3
Revision 4	30-01-2025	N.V.	Added pressure transmitter in vent line
Revision 3	13-01-2025	N.V.	Changed nozzle loads
Revision 2	16-12-2024	HFW	Updated connection N3
Revision 1	08-11-2024	HFW	Corrected baseloads
Check	26/2/25		Length -and angle tolerances acc. to KGR 100-02-EX-EN, class C / Form -and place tolerances acc. to ISO 2768-2, class K / Roughness according to ISO 4287, Ra in µm / Units in mm
Drawn	21-10-2024	N.V.	
Scale: 1 : 20		A2	

KANON LOADING EQUIPMENT
P.O. Box 385, 3840 AJ Harderwijk

Baseload diagram

For MLA270 on SUMED PORT

American Projection

Drawing number P242068A06

Revision 5

\\fserver.kle.local\Engineering\Projects\P242068\Engineering\Inventor\Drawings\A10\P242068A06.idw

This document is confidential and the information contained herein is a confidential disclosure. It is shown on the understanding that it will not be revealed to others or used for any other purpose without the written consent of KANON LOADING EQUIPMENT B.V.

Sheet 1 of 1

Sea side

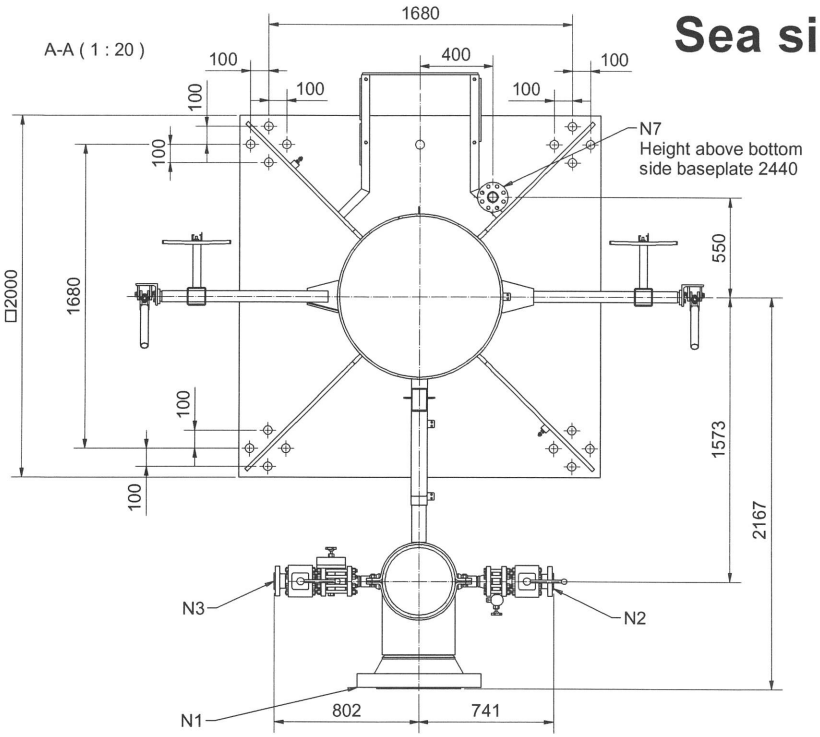

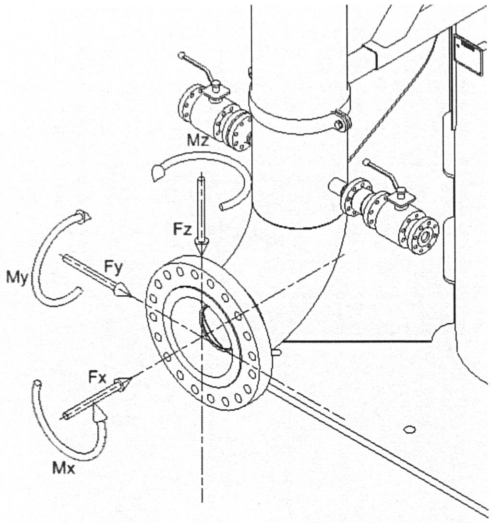

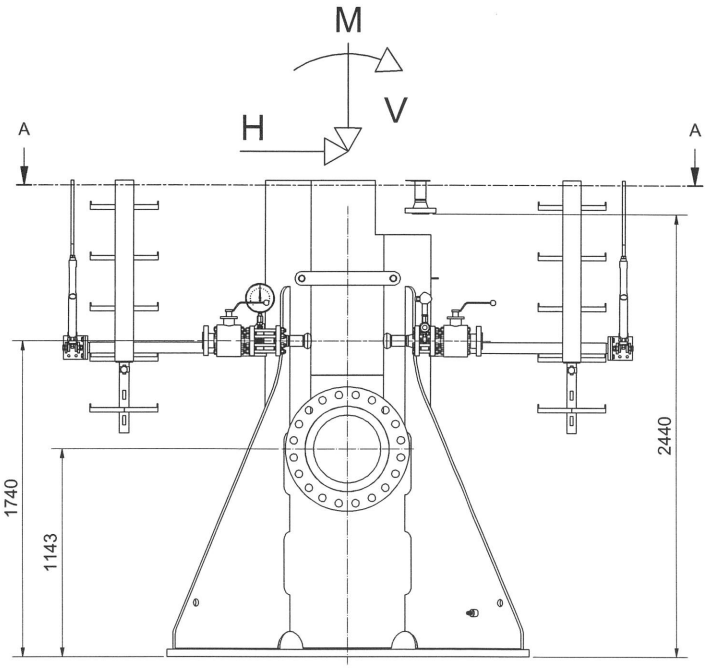

Loading arm no.	Nozzle		Nozzle loads					
	N1		Force loads (N)			Moments loads (Nm)		
	NPS	DN	Fx	Fy	Fz	Mx	My	Mz
P242068B10	16"	400	849	-8839	-1416	-15274	-1653	4168

Marine Loading Arm Connections

Nozzle:	Description:	Size:	Acc. to norm:	Additional remarks:
N1	Shore connection CNG	Wn flange 16" - 600#	ASME B16.5	
N2	Depress. conn. (riser)	Flange 2" - 600#	ASME B16.5	
N3	N2 Purge connection	Flange 2" - 600#	ASME B16.5	Incl NRV
N7	Flush connection	Wn flange 2" - 600#	ASME B16.5	

Maximum loads at the baseplate of the loading arm:
- Without extra safety factors.
- V [kN] deadload (DL) and fluid load (FL).
- H [kN] windload (WL) worst direction.
- M [kNm] windload (WL) worst direction and earthquake load (EL).

For design data see drawing: P242068A05

Ident. no.	Tag no.	Rating	V (kN)	H (kN)	M (kNm)	MLA length (m)
P242068B10	TBA	16" 600#	522	64	1050	16 x 7,5 x 8

Revision 6	01-04-2025	HFW	Corrrected nozzle loads
Revision 5	25-02-2025	HFW	Changed connections N2 and N3
Revision 4	30-01-2025	N.V.	Added pressure transmitter in vent valve
Revision 3	15-01-2025	N.V.	Changed nozzle loads
Revision 2	16-12-2024	HFW	Updated connection N3.
Revision 1	08-11-2024	HFW	Corrected baseloads

Check	1/4/25		Length -and angle tolerances acc. to KGR 100-02-EX-EN, class C; Form -and place tolerances acc. to ISO 2768-2, class K; Roughness according to ISO 4287, Ra in µm	Units in mm
Drawn	21-10-2024	N.V.		
Scale: 1 : 20		A2		

KANON LOADING EQUIPMENT
P.O. Box 385, 3840 AJ Harderwijk

Baseload diagram

For MLA270 on SUMED PORT

American Projection

Drawing number P242068B06

Revision 6

\\fileserver.kle.local\Engineering\Projects\P242068\Engineering\Inventor\Drawings\B10\P242068B06.idw

This document is confidential and the information contained herein is a confidential disclosure. It is shown on the understanding it is not to be revealed to others or used for any other purpose without the written consent of KANON LOADING EQUIPMENT B.V.

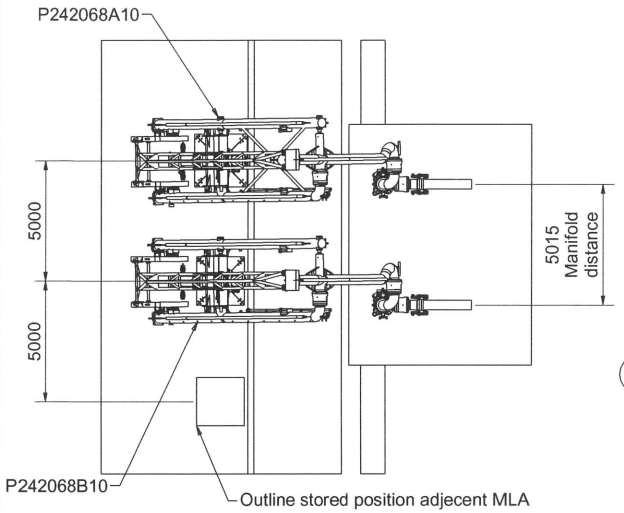

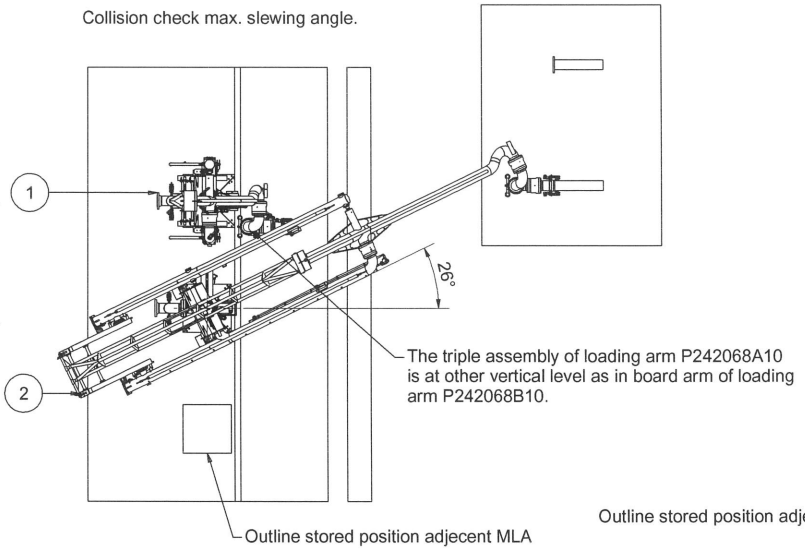

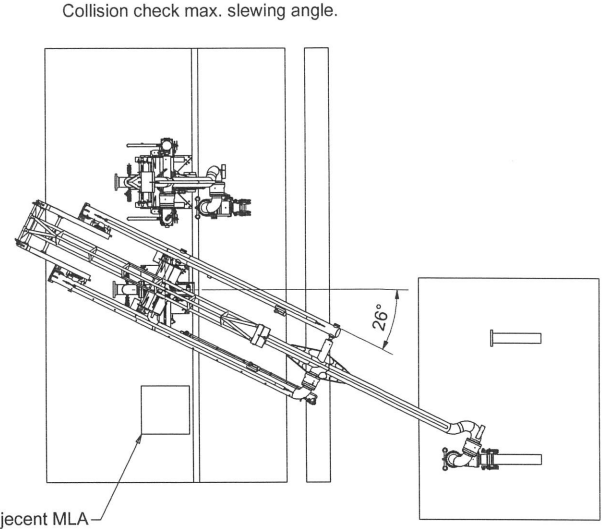

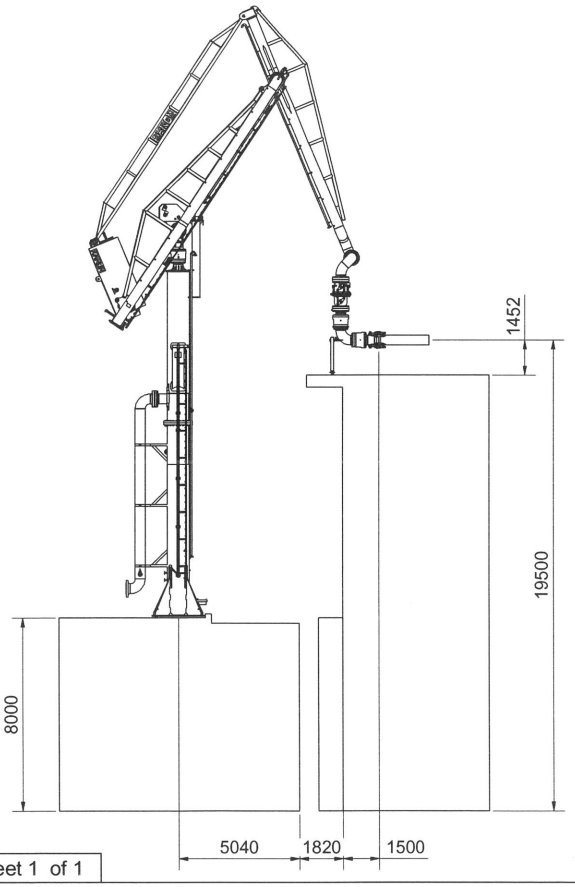

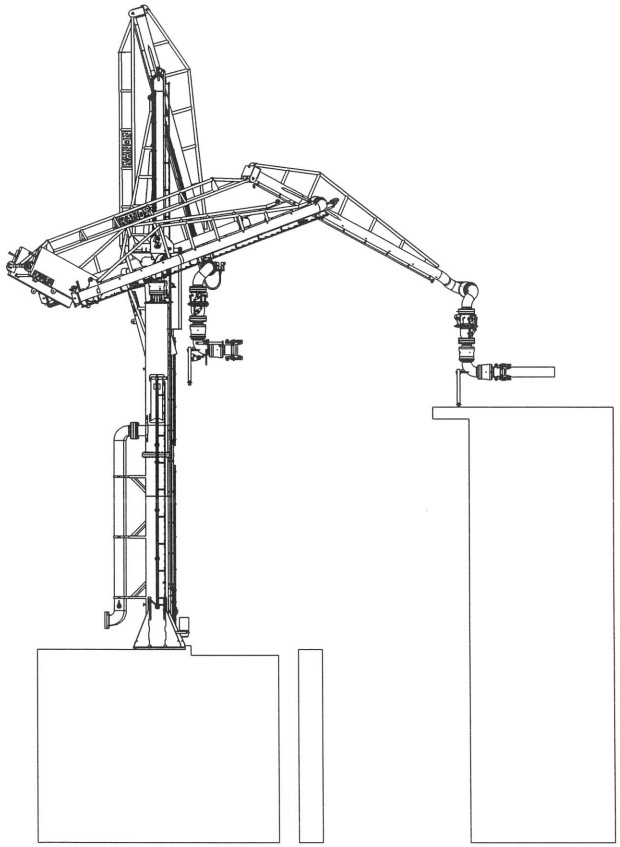

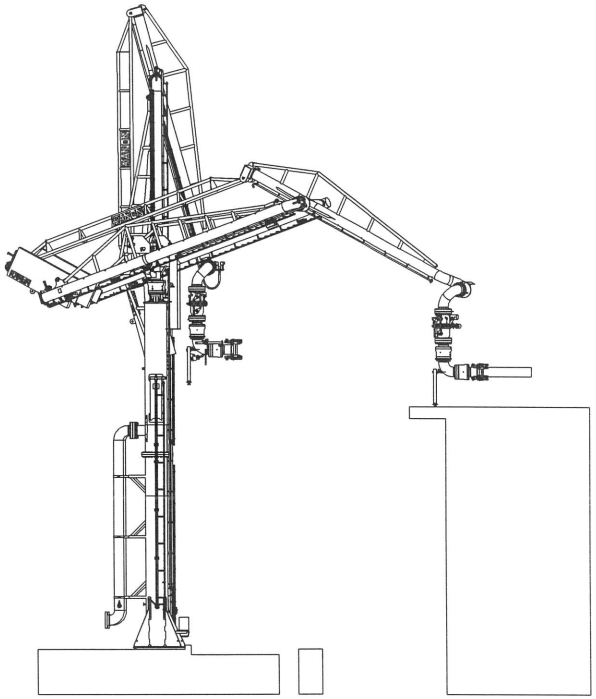

Revision 3			
Revision 2	16-12-2024	HFW	Updated MLA's and added item 18.
Revision 1	12-12-2024	HFW	Corrected jetty and ship
Check	17/12/24		Length -and angle tolerances acc. to KGR 100-02-EX-EN, class C / Form -and place tolerances acc. to ISO 2768-2, class K / Roughness according to ISO 4287, Ra in µm / Units in mm
Drawn	21-10-2024	N.V.	
Scale: 1 : 150		A2	

Jetty Layout SUMED PORT

And clash study

KANON LOADING EQUIPMENT
P.O. Box 385, 3840 AJ Harderwijk

American Projection

Drawing number: P242068A08

Revision: 2

\\fserver.kle.local\Engineering\Projects\P242068\Engineering\Inventor\Drawings\A10\P242068A08.idw

This document is confidential and the information contained herein is a confidential disclosure. It is shown on the understanding it is not to be revealed to others or used for any other purpose without the written consent of KANON LOADING EQUIPMENT B.V.

Kanon Loading Equipment B.V.
Edisonweg 27
3899 AZ Zeewolde
The Netherlands
Tel: +31(0)36-5219777
www.kanon.nl

P.O. BOX 385
3840 AJ Harderwijk
The Netherlands
Fax: +31(0)36-5219770

Identnr.	Rev.	Rev. Date	Page	1 OF 1
P242068A08	**2**	**16-12-2024**	Name	: NV
			Date	: 24-10-2024
Jetty layout SUMED PORT			**Dwg.**	**A2-P242068A08**

Nt	It	Qty	Description	Partnr	Dwg/Norm/Sup	Material	Materialnorm	Remarks	Rev	Att	Wght[N]
	1	1	Marine loading arm MLA260 16" 600#	P242068A10	A2-P242068A10	A106 GrB	ASTM A106	SUMED PORT	2	3.1	474952
	2	1	Marine loading arm MLA260 16" 600#	P242068B10	A2-P242068B10	A106 GrB	ASTM A106	SUMED PORT	2	3.1	471851
	10	0		0						- -	0
KS	13	1	Set maint. equipment for SHP834	99805492				SHP834			64
*	14	1	Lifting bridge LB-30-450	20000247	A2-20000247	S690Q	4th design 2020	WLL 30 ton		3.1	2175
*	15	1	Fall arrester	99002210	Hits	Alu/st.st.	EN 353-1	BodyControl I		- -	9
*	16	1	Safety lanyard	99002213	Hits	Polyamide	EN 354/355	L=1500 mm		- -	8
*	17	1	Full body harness	99002214	Hits		EN 361/358	Arbo approved		- -	14
KS	18	1	Maintenance parts inboard-heel swivels	P242068A86	Parts list	Alu/St.st.			2	- -	107

Total Weight [N] 949180

Nt	Description
KS	(NOTE STRICTLY FOR KANON INTERNAL USE)

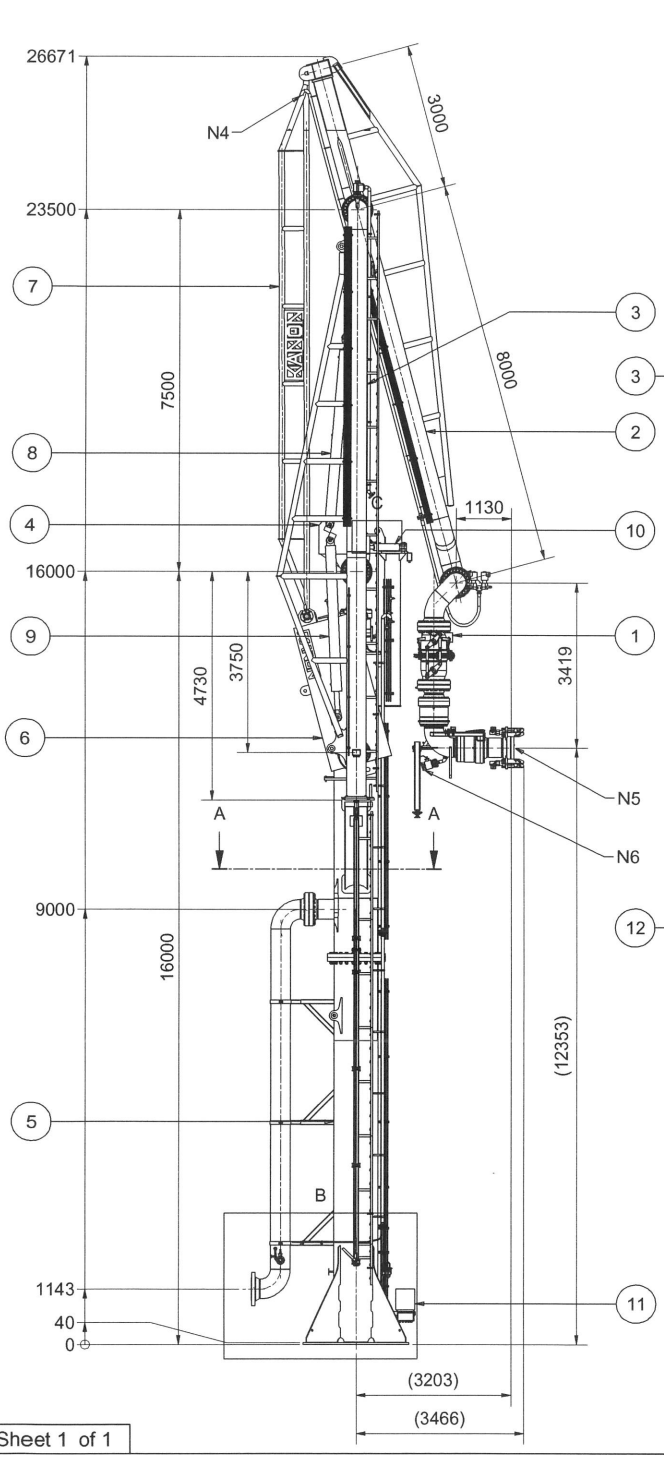

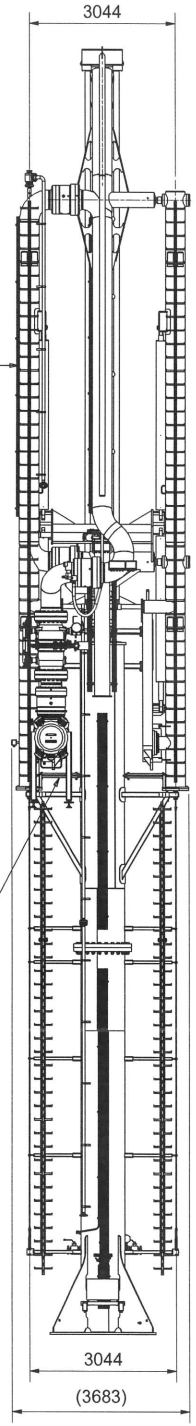

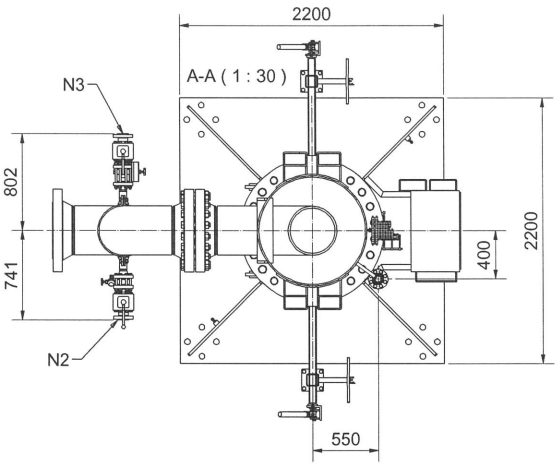

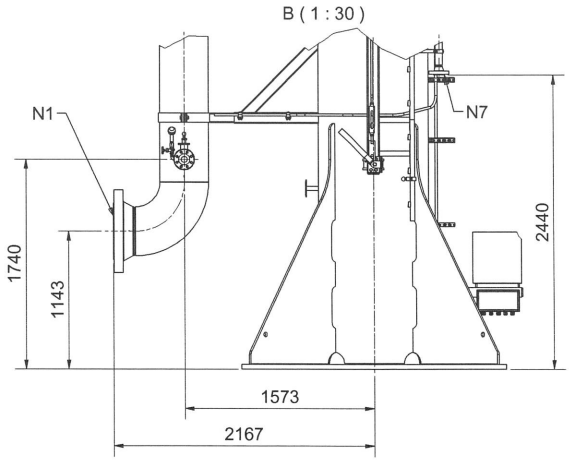

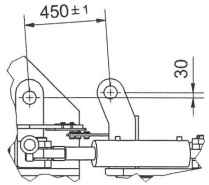

C (1:20)

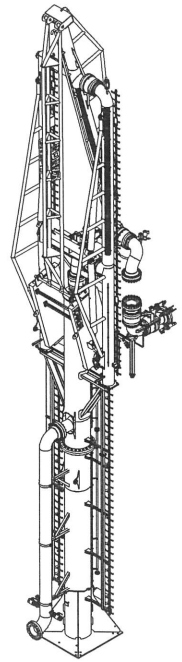

Related documents	
P242068A98	Dimensional drawing hydraulic valve block
P242068A97	Dimensional drawing hydraulic power pack
P242068A96	Hydraulic diagram power pack
P242068A95	Hydraulic diagram valve block
P242068A91	Wiring diagram
P242068A90	Logic diagram
P242068A40	Material / weld / ndt / location map
P242068A09	Operating envelope
P242068A06	Nozzle connections & Baseloads
P242068A05	Design Data
P242068A01	Transport drawing

Marine Loading Arm Connections

Nozzle:	Description:	Size:	Acc. to norm:	Additional remarks:
N1	Shore connection CNG	Wn flange 16" - 600#	ASME B16.5	
N2	Depress. Conn. (riser)	Flange 2" - 600#	ASME B16.5	
N3	N2 Purge connection	Flange 2" - 600#	ASME B16.5	Incl NRV
N4	Gas outlet	open air		ERC trapped volume
N5	Ship connection	Hydraulic QCDC 16" - 600#	ASME B16.5	Use bolts to secure
N6	Depress. Conn. (triple)	Flange 2" - 600#	ASME B16.5	
N7	Flush connection	Flange 2" - 600#	ASME B16.5	

Revision 6	01-04-2025	HFW	Corretced item 10 on Parts list
Revision 5	25-02-2025	HFW	Changed positions N2 and N3
Revision 4	30-01-2025	N.V.	Added pressure transmitter vapour line
Revision 3	16-12-2024	HFW	Several updates on triple inboard and riser added item 12
Revision 2	12-12-2024	HFW	Changed stripping line inboard in apex
Revision 1	08-11-2024	HFW	Make several corrections
Check	11/4/25	IN	Length -and angle tolerances acc. to KGR 100-02-EX-EN, class C / Form -and place tolerances acc. to ISO 2768-2, class K / Roughness according to ISO 4287, Ra in µm / Units in mm
Drawn	16-10-2024	N.V.	
Scale: 1 : 75		A2	

Marine Loading Arm

MLA270 16"-600# 16000x7500x8000 SUMED PORT

KANON LOADING EQUIPMENT
P.O. Box 385, 3840 AJ Harderwijk

American Projection

Drawing number P242068A10

Revision 6

\\fserver.kle.local\Engineering\Projects\P242068\Engineering\Inventor\Drawings\A10\P242068A10.idw

Equivalent or better materials may be used by Kanon after approval. These materials must be defined on the checklist, if applicable.

This document is confidential and the information contained herein is a confidential disclosure. It is shown on the understanding it is not to be revealed to others or used for any other purpose without the written consent of KANON LOADING EQUIPMENT B.V.

Sheet 1 of 1

Kanon Loading Equipment B.V.
Edisonweg 27
3899 AZ Zeewolde
The Netherlands
Tel: +31(0)36-5219777
www.kanon.nl

P.O. BOX 385
3840 AJ Harderwijk
The Netherlands
Fax: +31(0)36-5219770

Identnr.	Rev.	Rev. Date	Page	1 OF 1
P242068A10	**6**	**01-04-2025**	Name	: NV
			Date	: 22-10-2024
Marine loading arm MLA260 16" 600#			**Dwg.**	**A2-P242068A10**

Nt	It	Qty	Description	Partnr	Dwg/Norm/Sup	Material	Materialnorm	Remarks	Rev	Att	Wght[N]
	1	1	Triple assembly 16"-600# SUMED	P242068A11	A2-P242068A11	A234 GrWPB	ASTM A234		3	3.1	47424
	2	1	Outboard arm 16" L=8000	P242068A12	A2-P242068A12	A106 GrB	ASTM A106			3.1	44918
	3	1	Inboard arm 16" L=7500	P242068A16	A2-P242068A16	A106 GrB	ASTM A106		3	3.1	53818
	4	1	Heel 16" x 16"	P242068A19	A2-P242068A19	A234 GrWPB	ASTM A234			3.1	39385
	5	1	Riser 36" x 16" L=16000	P242068A20	A2-P242068A20	A106 GrB	ASTM A106	Baseplate 2200	5	3.1	123768
	6	1	Counterweight MLA260	P242068A23	A2-P242068A23	S235/S355	EN 10025			- -	130245
	7	1	Parallel structure 4" 7500 x 3750	P242068A24	A2-P242068A24	A106 GrB	ASTM A106			- -	8268
KS	8	2	Hydraulic cylinder VDW 180/100/100x1500	95401263	A4-95401262	S355/1.4462	L0=3800	Spherical eye ø70	1	- -	11004
KS	9	2	Hydraulic cylinder VDW 180/100/100x1250	95401950	A4-95401262	S355/1.4462	L0=3300	Spherical eye ø70	1	- -	9680
KS	10	2	Hydraulic cylinder slewing VDW 125/70x300	95401332	A4-95401260	S355/1.4462	L0=780	Spherical eye ø60	6	- -	1280
	11	1	Hydraulic / electric system	P242068A99	A2-P242068A99	1.4404/316L	ASTM A269/A213			- -	3872
	12	2	Transport plates	P242068A78	A3-P242068A78	S355J2	EN 10025		3	- -	2571

Total Weight [N] 476233

Nt	Description
KS	(NOTE STRICTLY FOR KANON INTERNAL USE)

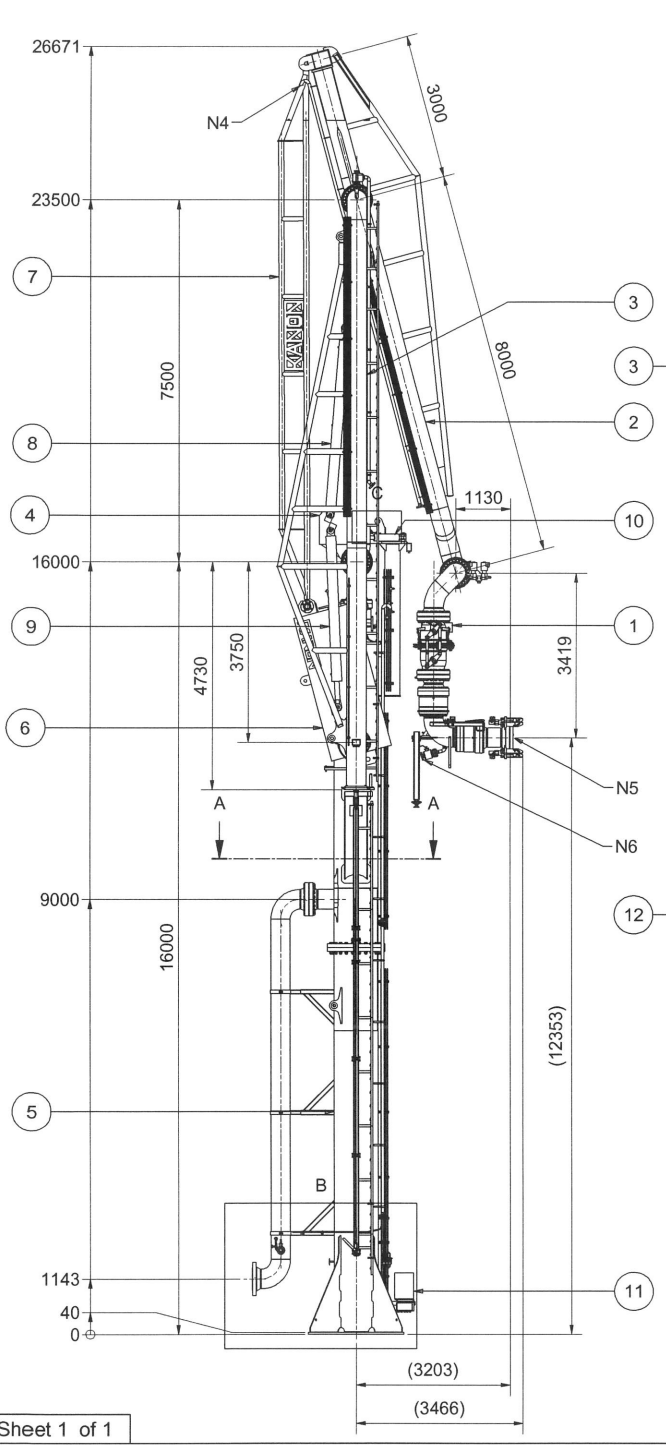

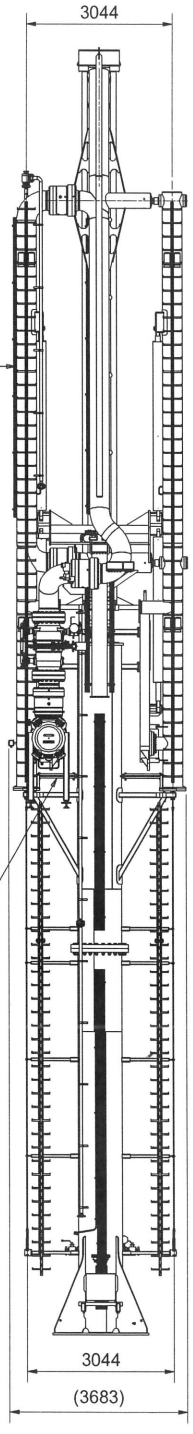

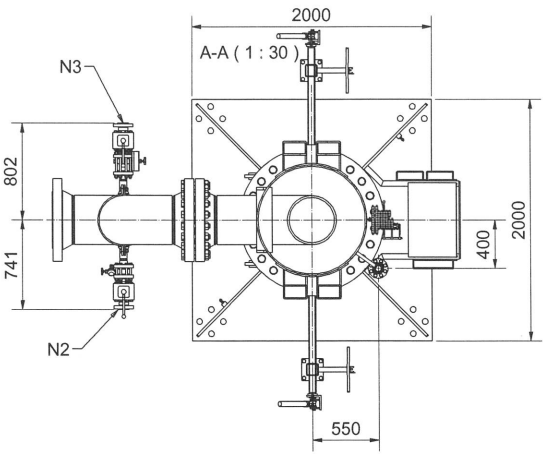

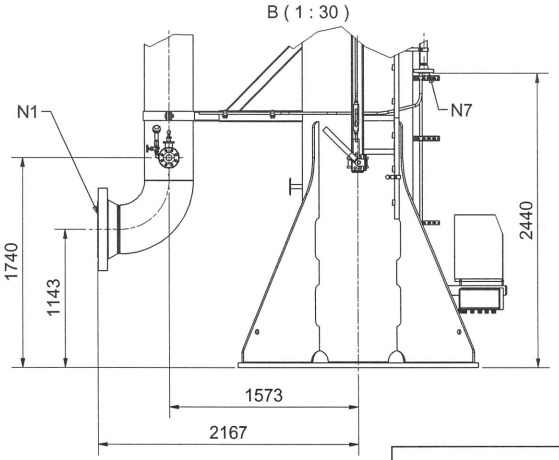

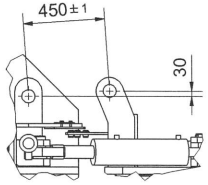

C (1:20)

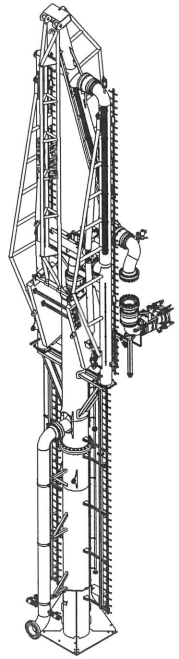

Related documents	
P242068A98	Dimensional drawing hydraulic valve block
P242068A97	Dimensional drawing hydraulic power pack
P242068A96	Hydraulic diagram power pack
P242068A95	Hydraulic diagram valve block
P242068A91	Wiring diagram
P242068A90	Logic diagram
P242068A40	Material / weld / ndt / location map
P242068A09	Operating envelope
P242068B06	Nozzle connections & Baseloads
P242068A05	Design Data
P242068A01	Transport drawing

Marine Loading Arm Connections

Nozzle:	Description:	Size:	Acc. to norm:	Additional remarks:
N1	Shore connection CNG	Wn flange 16" - 600#	ASME B16.5	
N2	Depress. Conn. (riser)	Flange 2" - 600#	ASME B16.5	
N3	N2 Purge connection	Flange 2" - 600#	ASME B16.5	Incl NRV
N4	Gas outlet	open air		ERC trapped volume
N5	Ship connection	Hydraulic QCDC 16" - 600#	ASME B16.5	Use bolts to secure
N6	Depress. Conn. (triple)	Flange 2" - 600#	ASME B16.5	
N7	Flush connection	Flange 2" - 600#	ASME B16.5	

Revision 6	01-04-2025	HFW	Corrected item 10 on parts list
Revision 5	25-02-2025	HFW	Changed positions N2 and N3
Revision 4	30-01-2025	N.V.	Added pressure transmitter in vent line
Revision 3	16-12-2024	HFW	Several updates on triple inboard and riser added item 12
Revision 2	12-12-2024	HFW	Changed stripping line inboard in apex
Revision 1	08-11-2024	HFW	Make several connections
Check	11/4/25		Length -and angle tolerances acc. to KGR 100-02-EX-EN, class C / Form -and place tolerances acc. to ISO 2768-2, class K / Roughness according to ISO 4287, Ra in µm / Units in mm
Drawn	16-10-2024	N.V.	
Scale:	1 : 75	A2	

KANON LOADING EQUIPMENT
P.O. Box 385, 3840 AJ Harderwijk

Marine Loading Arm

MLA270 16"-600# 16000x7500x8000 SUMED PORT

American Projection

Drawing number P242068B10

Revision 6

\\fserver.kle.local\Engineering\Projects\P242068\Engineering\Inventor\Drawings\B10\P242068B10.idw

Equivalent or better materials may be used by Kanon after approval. These materials must be defined on the checklist, if applicable.

This document is confidential and the information contained herein is a confidential disclosure. It is shown on the understanding that it is not to be revealed to others or used for any other purpose without the written consent of KANON LOADING EQUIPMENT B.V.

Kanon Loading Equipment B.V.
Edisonweg 27
3899 AZ Zeewolde
The Netherlands
Tel: +31(0)36-5219777
www.kanon.nl

P.O. BOX 385
3840 AJ Harderwijk
The Netherlands
Fax: +31(0)36-5219770

Identnr.	Rev.	Rev. Date	Page	1 OF 1
P242068B10	**6**	**01-04-2025**	Name	: NV
			Date	: 22-10-2024
Marine loading arm MLA260 16" 600#			**Dwg.**	**A2-P242068B10**

Nt	It	Qty	Description	Partnr	Dwg/Norm/Sup	Material	Materialnorm	Remarks	Rev	Att	Wght[N]
	1	1	Triple assembly 16"-600# SUMED	P242068A11	A2-P242068A11	A234 GrWPB	ASTM A234		3	3.1	47424
	2	1	Outboard arm 16" L=8000	P242068A12	A2-P242068A12	A106 GrB	ASTM A106			3.1	44918
	3	1	Inboard arm 16" L=7500	P242068A16	A2-P242068A16	A106 GrB	ASTM A106		3	3.1	53818
	4	1	Heel 16" x 16"	P242068A19	A2-P242068A19	A234 GrWPB	ASTM A234			3.1	39385
	5	1	Riser 36" x 16" L=16000	P242068B20	A2-P242068B20	A106 GrB	ASTM A106	Baseplate 2000	5	3.1	120668
	6	1	Counterweight MLA260	P242068A23	A2-P242068A23	S235/S355	EN 10025			- -	130245
	7	1	Parallel structure 4" 7500 x 3750	P242068A24	A2-P242068A24	A106 GrB	ASTM A106			- -	8268
KS	8	2	Hydraulic cylinder VDW 180/100/100x1500	95401263	A4-95401262	S355/1.4462	L0=3800	Spherical eye ø70	1	- -	11004
KS	9	2	Hydraulic cylinder VDW 180/100/100x1250	95401950	A4-95401262	S355/1.4462	L0=3300	Spherical eye ø70	1	- -	9680
KS	10	2	Hydraulic cylinder slewing VDW 125/70x300	95401332	A4-95401260	S355/1.4462	L0=780	Spherical eye ø60	6	- -	1280
	11	1	Hydraulic / electric system	P242068A99	A2-P242068A99	1.4404/316L	ASTM A269/A213			- -	3872
	12	2	Transport plates	P242068A78	A3-P242068A78	S355J2	EN 10025		3	- -	2571

Total Weight [N] 473133

Nt	Description
KS	(NOTE STRICTLY FOR KANON INTERNAL USE)

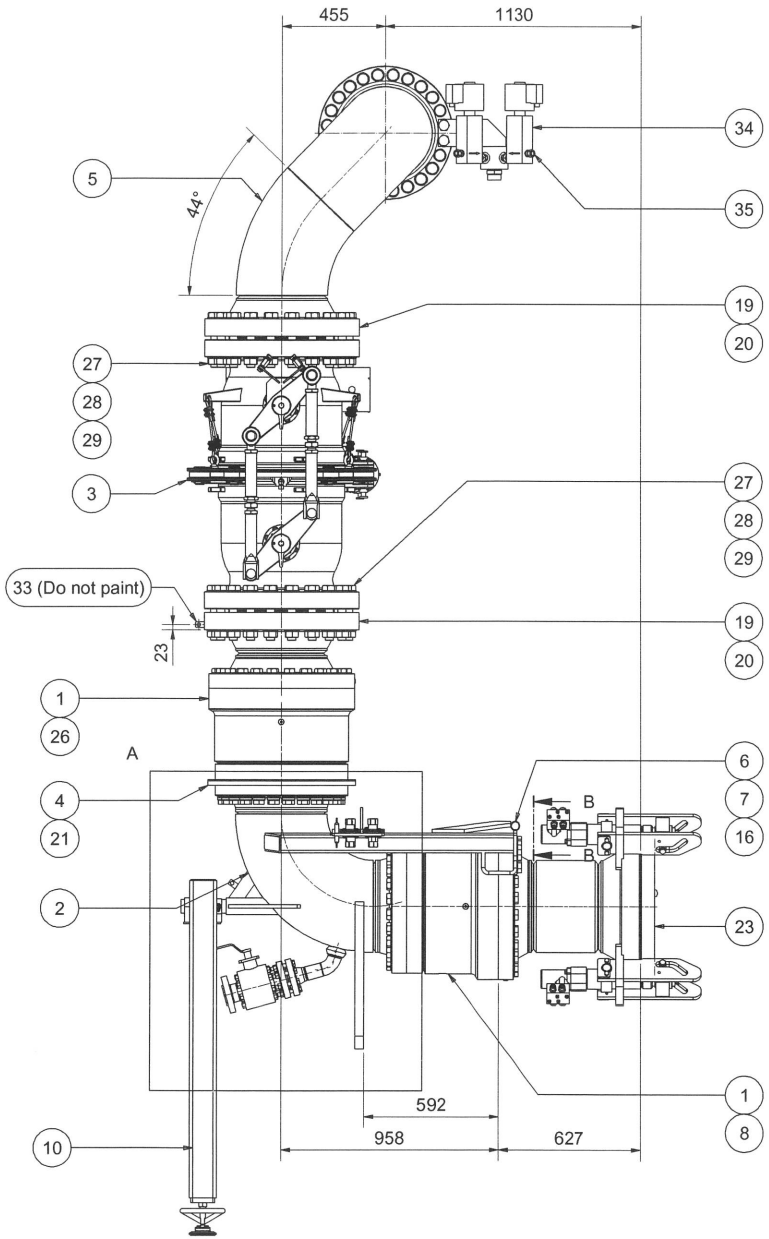

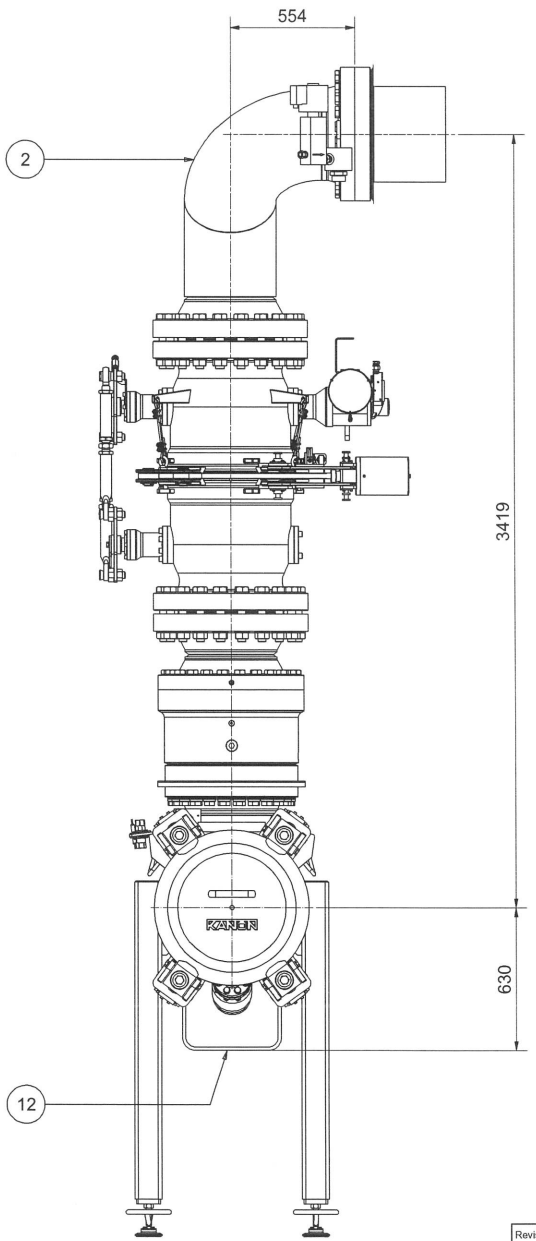

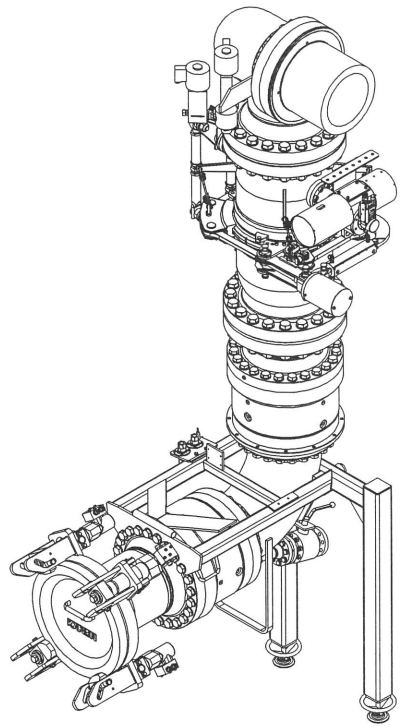

This document is confidential and the information contained herein is a confidential disclosure. It is shown on the understanding it is not to be revealed to others or used for any other purpose without the written consent of KANON LOADING EQUIPMENT B.V.

Sheet 1 of 2

Revision 3			
Revision 2	25-02-2025	HFW	Corrected length item 30
Revision 1	13-12-2024	NV	Changed item 10, added 34 + 35
Check	25/2/25		Length -and angle tolerances acc. to KGR 100-02-EX-EN, class C / Form -and place tolerances acc. to ISO 2768-2, class K / Roughness according to ISO 4287, Ra in µm / Units in mm
Drawn	04-11-2024	NZZ	
Scale: 1 : 16		A2	

Triple assembly

16" - 600# ERC + Hydraulic QCDC

KANON LOADING EQUIPMENT
P.O. Box 385, 3840 AJ Harderwijk

American Projection

Drawing number P242068A11

Revision 2

\\fserver.kle.local\Engineering\Projects\P242068\Engineering\Inventor\Drawings\A1\P242068A11.idw

This document is confidential and the information contained herein is a confidential disclosure. It is shown on the understanding it is not to be revealed to others or used for any other purpose without the written consent of KANON LOADING EQUIPMENT B.V.

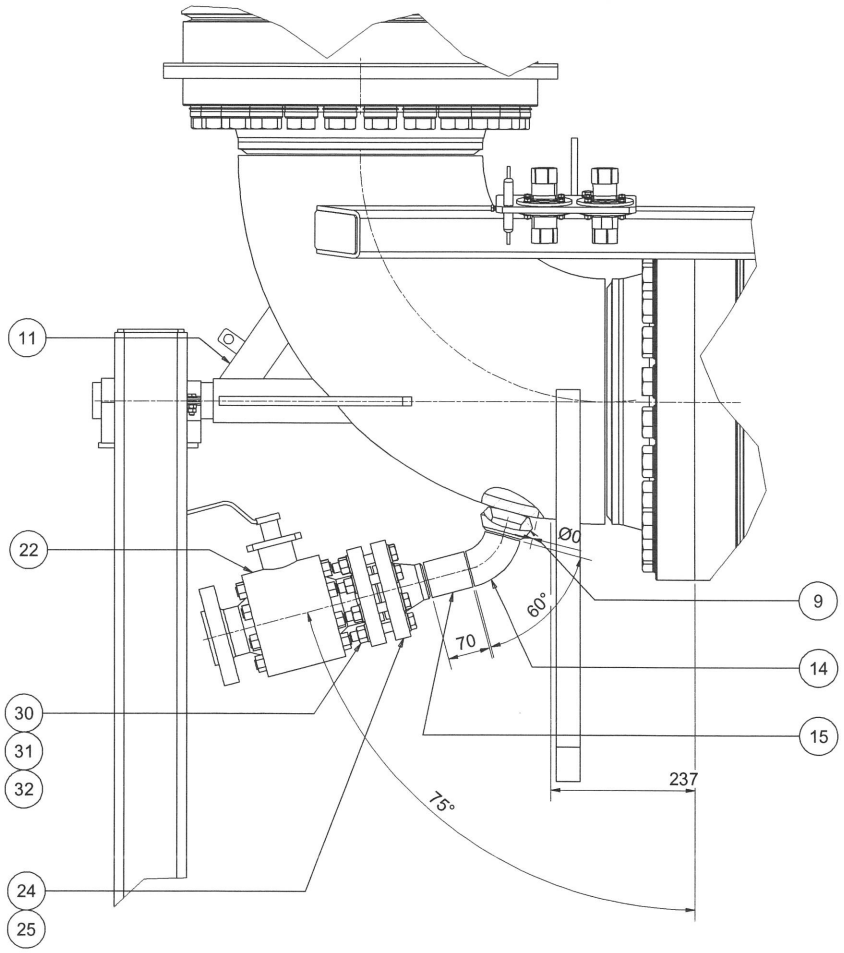

A (1 : 6)

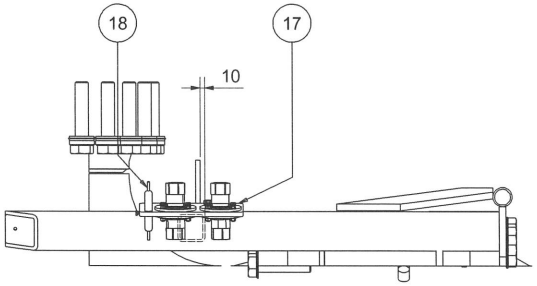

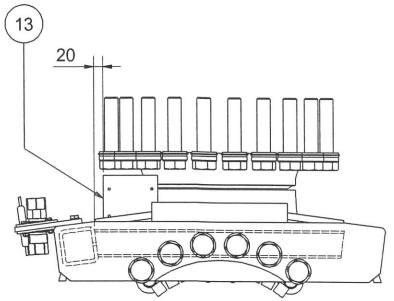

B-B (1 : 8)

Revision 3			
Revision 2	25-02-2025	HFW	Corrected length item 30
Revision 1	13-12-2024	NV	Changed item 10, added 34 + 35
Check	25/2/25		Length -and angle tolerances acc. to KGR 100-02-EX-EN, class C / Form -and place tolerances acc. to ISO 2768-2, class K / Roughness according to ISO 4287, Ra in µm / Units in mm
Drawn	04-11-2024	NZZ	
Scale: 1 : 6		A2	

Triple assembly

16" - 600# ERC + Hydraulic QCDC

KANON LOADING EQUIPMENT
P.O. Box 385, 3840 AJ Harderwijk

American Projection

Drawing number: P242068A11

Revision: 2

\\fileserver.kle.local\Engineering\Projects\P242068\Engineering\Inventor\Drawings\A1\P242068A11.idw

Kanon Loading Equipment B.V.
Edisonweg 27
3899 AZ Zeewolde
The Netherlands
Tel: +31(0)36-5219777
www.kanon.nl

P.O. BOX 385
3840 AJ Harderwijk
The Netherlands
Fax: +31(0)36-5219770

Identnr.	Rev.	Rev. Date	Page	1 OF 2
P242068A11	**2**	**25-02-2025**	Name	: NV
			Date	: 22-10-2024
Triple assembly 16"-600# SUMED			**Dwg.**	**A2-P242068A11**

Nt	It	Qty	Description	Partnr	Dwg/Norm/Sup	Material	Materialnorm	Remarks	Rev	Att	Wght[N]
KS	1	2	Swiveljoint SHP834 DN400	80349001	A0-80349001	1.4462 1.6582				3.1	18144
	2	2	Elbow 16" 90° SR sched. 60 ø406.4x16.7	91322951	ASME B16.9	A234 GrWPB	ASTM A234			3.1	1706
KS	3	1	ERC 16"-600# RB (CNG, dual action)	99805483	MIB	ST.	Flanged ends	DV6100		3.1	16000
	4	1	Insulating set assy flanged 16"-600#	49800072	A3-49800072					3.1	302
	5	1	Elbow 16" 44° LR sched. 60 ø406.4x 16.7	99805493	ASME B16.9	A234 GrWPB	ASTM A234			3.1	751
KS	6	-32	Hex bolt M 30 x 120 mm iso-metric mating	940A0574	ISO 4014	8.8	ISO 898-1	Hot dip galvanized		- -	-288
	7	8	Hex bolt M 30 x 160 mm iso-metric mating	940A0582	ISO 4014	8.8	ISO 898-1	Hot dip galvanized		- -	88
KS	8	-1	Outerbody Flange	83349001	A1-83349001	WNr. 1.0546		s=16,7		3.1	-1493
	9	1	Weldolet 18"- 12"x 2" XS	91822175	MSS SP-97	A105N	ASTM A105			3.1	8
	10	1	Support jack ultra strong SUMED	P242068A76	A2-P242068A76	S355J2H	EN 10025	Fixed H=1452 mm.	1	- -	988
	11	1	Support for support jack 16"	20916001	A3-20916001	A106 GrB	ASTM A106	With ERC		3.1	159
	12	1	Protection beam 16"	20916003	A4-20915003	S355J2	EN 10025			3.1	78
	13	1	Mounting plate for junction box	48100001	A4-48100001	S355J2		Stahl 8146/x03x		- -	12
	14	1	Elbow 2" 60° LR sched. 80 ø 60.3x 5.5	99802125	ASME B16.9	A234 GrWPB	ASTM A234	2 "-S80		3.1	1
	15	1	Pipe seamless ø 60.3 x 5.54 L=70 mm	91122222	ASME B36.10	A106 GrB	ASTM A106	2"-S80		3.1	5
	16	1	Safety fork 16" SHP834 SR	20910105	A3-20910105	S355J2				- -	734
KS*	17	1	Quick release unit for Snap Tite 3/4"BSP	95401233	A3-95401233	316				- -	63
KS*	18	1	Quick release connector 2mtr + 4mtr	95000583	A4-95000583	Neoprene	Hytech IE2	Male 2mtr Fem. 4mtr		- -	0
	19	2	Wn flange 16" 600# RF s=16.7 mm	92022891	ASME B16.5	A105N	ASTM A105			3.1	3556
	20	2	Gasket spiralw. 16" 600# flexitallic	96151890	96150000	316L/316L/	Graphite/316L	Inner and outer ring		- -	0
KS	21	1	Innerbody Flange for insulating flange	85349002	A1-85349002	WNr. 1.0546		s=16,7		3.1	1081
KS	22	1	Ball valve full bore flanged 2"-600#	97090849	A4-97090849	A-216 Gr.WCB	A-351 Gr.CF8M	PTFE AS/FS		3.1	0
KS	23	1	Hydraulic QCDC 16" - 600#	P242068A50	A4-P242068A50	A106 GrB	ASTM A106			3.1	4965
	24	1	Wn flange 2" 600# RF s=5.5 mm	92022821	ASME B16.5	A105N	ASTM A105			3.1	54
	25	1	Gasket spiralw. 2" 600# flexitallic cgi	96151820	96150000	316L/316L/	GRAPHITE/316L	Inner and outer ring		- -	0
KS	26	-1	Innerbody Flange	85349001	A1-85349001	WNr. 1.0546		s=16,7		3.1	-1081
	27	40	Hex bolt M 36 x 220 mm iso-metric mating	940A0690	ISO 4014	8.8	ISO 898-1	Hot dip galvanized		- -	760
*	28	20	Hex. nut M 36 iso-metric mating	940A0760	ISO 4032	8	ISO 898-2	Hot dip galvanized		- -	20
*	29	80	Washer ID 37	94030960	ISO 7089	St.	200 HV	Hot dip galvanized		- -	80
	30	8	Hex bolt M 16 x 100 mm iso-metric mating	940A0420	ISO 4014	8.8	ISO 898-1	Hot dip galvanized	2	- -	16
	31	8	Hex. nut M 16 iso-metric mating	940A0740	ISO 4032	8	ISO 898-2	Hot dip galvanized		- -	0
	32	16	Washer ID 17	94030940	ISO 7089	St	200 HV	Hot dip galvanized		- -	0
	33	1	ISO check	43000323	A4-43000323	316L	ASTM A240			3.1	1
	34	1	Manifold for trapped gas	P242068A75	A2-P242068A75	316	ASTM		1	- -	634

Total Weight [N] 47410

Kanon Loading Equipment B.V.
Edisonweg 27
3899 AZ Zeewolde
The Netherlands
Tel: +31(0)36-5219777
www.kanon.nl

P.O. BOX 385
3840 AJ Harderwijk
The Netherlands
Fax: +31(0)36-5219770

Identnr.	Rev.	Rev. Date	Page	2 OF 2
P242068A11	**2**	**25-02-2025**	Name	: NV
			Date	: 22-10-2024
Triple assembly 16"-600# SUMED			**Dwg.**	**A2-P242068A11**

Nt	It	Qty	Description	Partnr	Dwg/Norm/Sup	Material	Materialnorm	Remarks	Rev	Att	Wght[N]
	35	2	Hydraulic pipe seamless ø 20 x 2.5 ex.EU L=3000 mm	91180021	EN 10216-5	1.4404/316L	ASTM A269/A213	TCI D4/T3	1	- -	66

Total Weight [N] 47410

Nt	Description
KS	(NOTE STRICTLY FOR KANON INTERNAL USE)

KANON
LOADING EQUIPMENT

Installation, Operating and Maintenance manual

Section 8

Appendages

GEFA
PROCESSTECHNIK GMBH
Germaniastraße 28
44379 Dortmund
Telefon: +49 (0)231/61009-0
E-mail: gefa@gefa.com
Postfach 700110
44371 Dortmund
Fax: +49 (0)231/61009-80
Internet: www.gefa.com

Operating instructions
Installation / Operation
3-pce ball valve series DG1
DN 8 – DN 100 full bore
DN 15 – DN 150 reduced bore

General information

- The valve may be fitted in any position in the pipework.
- Prior to the mounting of the valve flush the pipelines to remove all traces of soiling, welding residues etc.
- The pipes must not have any tension.
- CAUTION: The rotating ball may cause injury. Keep away from space between ball and body!

Installation of valves with screwed ends

- Use hemp core, PTFE etc. to tighten the threads. Apply the wrench only on the screwed ends to tighten the valve to the pipe.
- Tightening by using the valve body or hand lever can lead to damage.

Installation of valves with short butt weld ends DN 8 - DN 50 full bore

- **ATTENTION:** Short butt weld ends (DN 8 - DN 50 full bore) are only pre-assembled. After installation the body screws have to be tightened (see table „tightening moments“).
- Spot weld the valve in the pipe.
- Unscrew all body screws.
- Remove the body screw and nut which are below the top plate (screw which is not going through the body).
- Swing out the centre section (valve to be in open position).
- Secure seats against falling out (e.g. with tape).
- After having finished the welding swing back the centre section.
- Replace screw and nut.
- Secure that the ball valve is exactly in „open“ position.
- Tighten the body screws (see table „tightening moments“).
- **ATTENTION:** Do not operate the valve before flushing, the valve must stay in open position, as otherwise the seats may be damaged!

Installation of firesafe valves, valves with long butt weld ends, ends for orbital welding or but weld ends DN 65 - DN 100 full bore

- Weld the valve in the pipe (ball must be in open position, centre section must not be dismounted). After dismounting of firesafe valves use new graphite sealings.
- **ATTENTION:** Do not operate the valve before flushing, the valve must stay in open position, as otherwise the seats may be damaged!

Putting into operation

- Flush the ball valve and pipe thoroughly again.
- Open and close the valve for test run.
- In case of any leakage between centre section and end caps the body screws and nuts must be tightened again (see table „tightening moments“).

Mounting of actuators

- Before mounting the actuator the gland nut has to be secured by the security cap.
- The mounted actuator must not cause a thrust load on the valve shaft. If necessary the actuator must be fastened / supported. NOTE: In case of moving pipelines the fastening of the actuator must not be rigid.
- For working temperatures up to max. 140°C the actuators can be directly mounted. If temperatures are higher a mounting bracket should be used as thermal isolation between actuator and valve.

Tightening moments

Max. tightening moments must not be significantly exceeded.

DN	8/10	15	20	25	32	40	50	65	80	100
M [Nm]	7	15	15	15	35	35	60	80	80	125

PROCESSTECHNIK GMBH
Germaniastraße 28
44379 Dortmund
Telefon: +49 (0)231/61009-0
E-mail: gefa@gefa.com
Postfach 700110
44371 Dortmund
Fax: +49 (0)231/61009-80
Internet: www.gefa.com

Operating instructions Maintenance / Storage 3-pce ball valve series DG1 DN 8 – DN 100 full bore DN 15 – DN 150 reduced bore

Maintenance

- The ball valves are maintenance-free.
- Should a leakage occur at the gland packing, retighten the gland nut/screws (12/21). Take care that the gland nut/screws are not tightened too much. Normally the leakage can be stopped by simply turning the nut/screws by 30° to 60°.

Replacement of seats and seals

- Check whether the pipeline has been rendered depressurised and is empty.
- Set valve in open position and remove centre section.
- Close the valve and remove centre ring (DN 65-100 / 27) seats (5) and ball (3). Be careful not to damage the ball.
- Remove body seals (17).
- Remove handle nut/screw (15/25), hand lever (13/23 and 24) and stop plate (DN 65-100 / 22) respectively security cap (DN 8-50) and unscrew gland nut/screws (12/21).
- Take off gland flange (DN 65-100 / 20), disk spring washers (11), washer (26) and remove gland (10).
- Push stem (4) into the valve body and remove it carefully.
- Remove thrust washer (7) and primary sealing (8) from the stem.
- Remove stem packing (6) and thrust washer (9).
- Clean all parts, especially the sealing surfaces of the ends.

Assembly

- Put the thrust washer (7) and the primary sealing (8) on the stem (4) and insert stem from the inside of the body.
- Put stem packing (6), thrust washer (9), gland (10), washer (26) and disk spring washers (11) on stem.
- DN 8-50: Replace gland nut (12) and tighten. Avoid rotating the stem (4) by applying a suitable wrench. Secure the gland nut by mounting the security cap (27)
  DN 65-100: Replace gland flange (20) and fix it using the screws (21).
  See table tightening moments for gland nut/screws.
- Replace stop plate (DN 65-100 / 22), hand lever (13/23 and 24) and handle nut/screw (15/25).
- Insert ball (3), centre ring (DN 65-100 / 27), seats (5) and body seals (17).
- Mount complete centre section (ball in open position) between the ends.
- Set ball in closed position and tighten the body screws (18/19) (see table tightening moments for body screws).
- Open and close the valve for test run.
- **CAUTION:** The rotating ball may cause injury. Keep away from space between ball and body!

Tightening moments for body screws

Max. tightening moments must not be significantly exceeded.

DN	8/10	15	20	25	32	40	50	65	80	100
M [Nm]	7	15	15	15	35	35	60	80	80	125

Tightening moments for gland nut / screws

DN	8/10	15	20	25	32	40	50	65	80	100
M [Nm]	10	14	14	14	18	18	25	7	7	7

Storage

- Storage and transport of the valves to be dry and clean (without any dirt).
- Temperatures for storing: - 15°C to + 30°C
- In humid rooms drying material respectively heating is necessary to avoid condensation of water.
- Valves have to be protected against force (shock, blow, vibration etc.).
- During storage or transport the ball valve must be either in open or closed position (no intermediate position!).

PROCESTECHNIEK NEDERLAND

Welplaathoek 20
3197 KP Botlek RT
Telefoon: +31.10.4169139
E-mail: gefa@gefa.nl

Postbus 15
3190 AA Hoogvliet RT
Fax: +31.10.4162929
Internet: www.gefa.nl

Materials
3-pce ball valve series DG1

DN 8 - DN 50 full bore

DN 15 - DN 65 red. bore

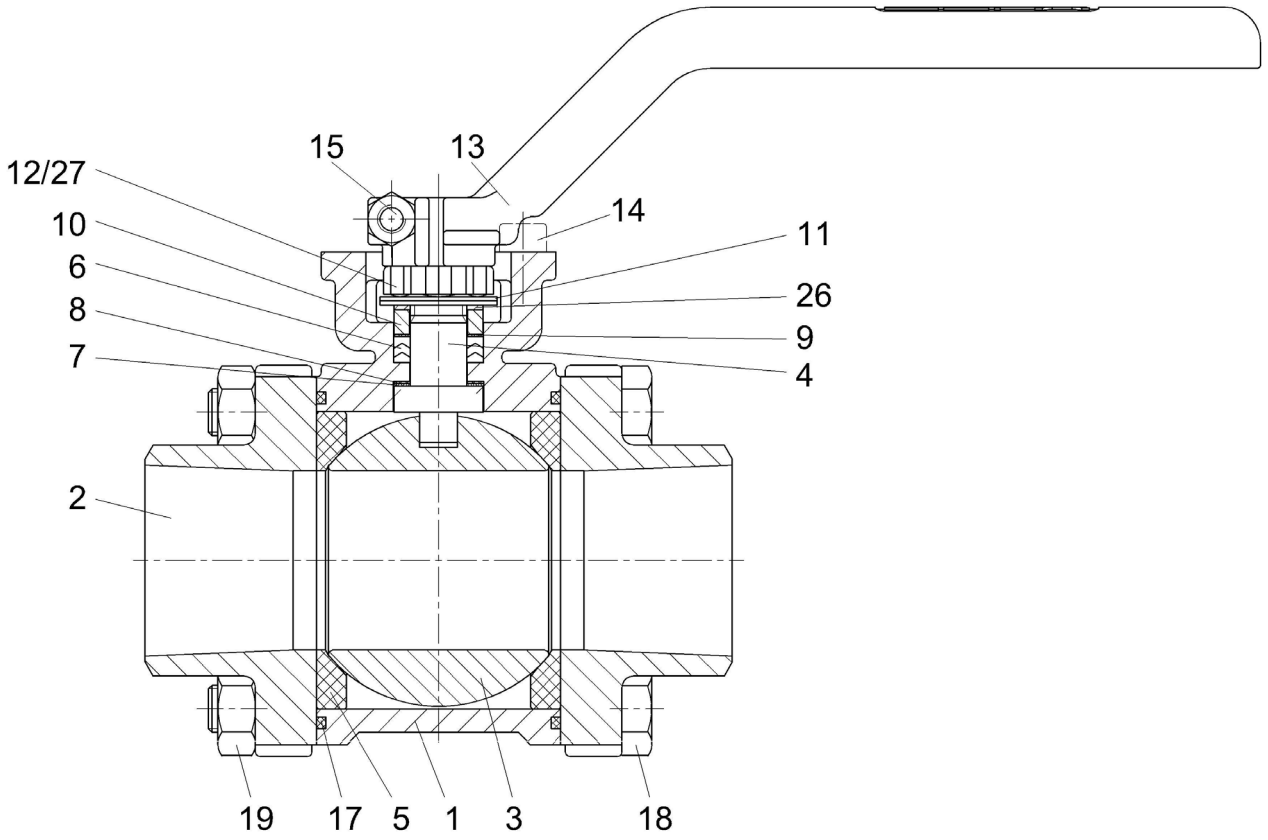

Teil Nr. Part no.	Description		Material DG1 6666 ** T	DG1 6666 ** TK	DG1 6644 2 T
1	Body		1.4408		
2	End cap		1.4408	1.4408	GS-C25
3	Ball		1.4408		
4	Stem		1.4542		
5*	Seat		PTFE / glass PTFE /	PTFE / carbon PTFE /	PTFE / glass PTFE /
6*	Stem packing		PTFE / glass		
7*	Thrust washer		PTFE / carbon		
8*	Primary sealing		PTFE / glass		
9*	Thrust washer		PTFE / carbon		
10	Gland		1.4301		
11	Disk spring washer		1.4310		
12	Hexagon nut		DIN 439 - A2 / Stainless steel		
13	Hand lever		1.4308		
14	Cylinder screw / nut		DIN 912 / DIN 934 - A2 / Stainless steel		
15	Cylinder screw / nut		DIN 912 / DIN 934 - A2 / Stainless steel		
17*	Body seal		PTFE / glass		
18	Stud bolt		A2 / Stainless steel		
19	Hexagon nut		DIN 934 - A2 / Stainless steel		
26	Washer		1.4301		
27	Security cap		A2 / Stainless steel		

* = Wearing parts (repair kit) * =

** 2 = butt weld ends, short version 2 =
3 = screwed ends 3 =
4 = socket weld ends 4 =
7 = butt weld ends, long version 7 =

Other materials available

subject to changes

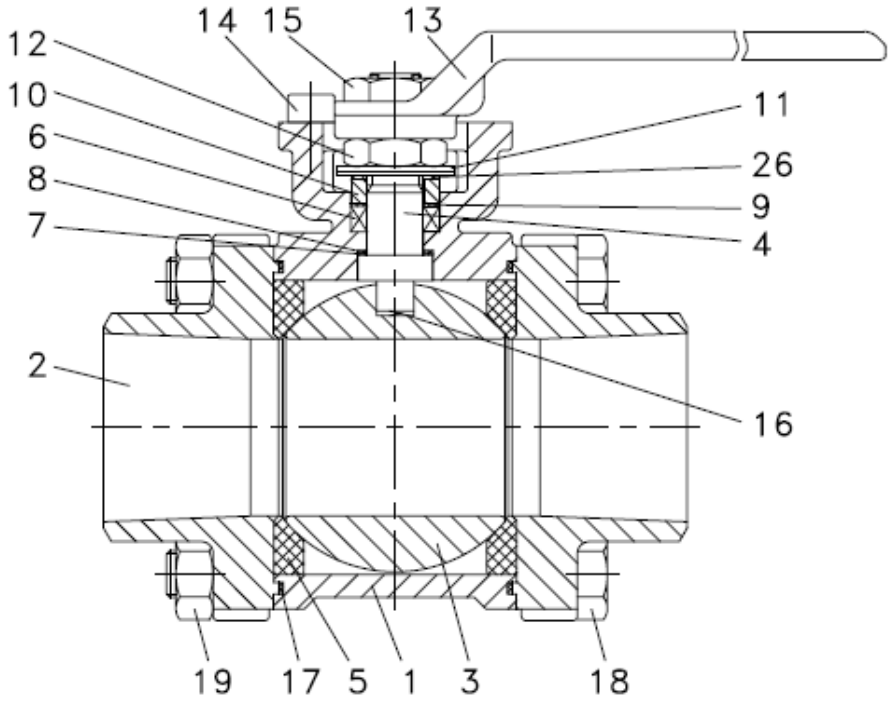

26	Washer		1.4301
19	Hexagon nut		A2 / Stainless steel
18	Stud bolt		A2 / Stainless steel
17	Body seal		Graphite
16	Antistatic device		1.4301
15	Hexagon nut		A2 / Stainless steel
14	Cyl. – screw/nut		A2 / Stainless steel
13	Hand lever		1.4308
12	Hexagon nut		A2 / Stainless steel
11	Disk spring washer		1.4310
10	Gland		1.4301
9	Thrust washer		PTFE – Carbon
8	Primary sealing		PTFE – Glass
7	Thrust washer		PTFE – Carbon
6	Stem packing		Graphite
5	Seat		PTFE
4	Stem		1.4401
3	Ball		1.4401
2	End cap		1.4408 / GS – C25
1	Body		1.4408
Pos.:	Description:		Material:

GEFA PROCESSTECHNIK GMBH
Germaniastraße 28 44379 Dortmund

Schutzvermerk nach DIN 34 beachten

Maßstab ./.

Data sheet

	Datum	Name
2001		
Bearb.	21.03.	HA
Gepr.	21.03.	ZA
Norm		
Rev. gepr. 16.04.2003		

Datenblatt
DG DN8-50 voller Durchg. / full bore
DG DN15-65 red. Durchg. / red. bore
Firesafe

7283-4

Blatt
Bl.

Zust.	Änderung	Datum	Name
c	A1697	16.04.2003	
b	A1429	17.07.2001	ZA
a	A1409	27.06.2001	ZA

Materials
3-pce ball valve series DG1

3197 KP Botlek RT
Telefoon: +31.10.4169139
E-mail: gefa@gefa.nl

3190 AA Hoogvliet RT
Fax: +31.10.4162929
Internet: www.gefa.nl

DN 65-DN 100 full bore
DN 80-DN 150 red. bore

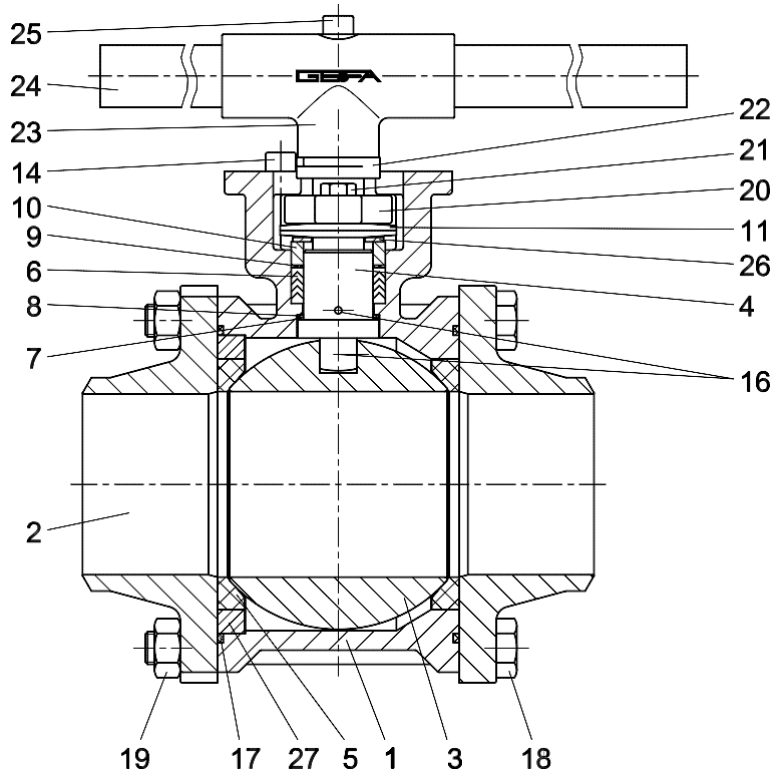

Part no.	Description		Material DG1 6666 ** T	DG1 6666 ** TK	DG1 6644 2 T
1	Body		1.4408		
2	End cap		1.4408	1.4408	GS-C25
3	Ball		1.4408		
4	Stem		1.4401		
5*	Seat		PTFE / PTFE / glass	PTFE / PTFE / carbon	PTFE / PTFE / glass
6*	Stem packing		PTFE / glass		
7*	Thrust washer		PTFE / carbon		
8*	Primary sealing		PTFE / glass		
9*	Thrust washer		PTFE / carbon		
10	Gland		1.4301		
11	Disk spring washer		1.4310		
14	Cylinder screw / nut		DIN 912 / DIN 934 - A2 / Stainless steel		
16	Antistatic device		1.4301		
17*	Body seal		PTFE / glass		
18	Stud bolt		A2 / Stainless steel		
19	Hexagon nut		DIN 934 - A2 / Stainless steel		
20	Gland flange		1.4308		
21	Hexagon screw		DIN 933 - A2 / Stainless steel		
22	Stop plate		1.4308		
23	T-piece		1.4308		
24	Pipe		Stainless steel		
25	Cylinder screw		DIN 912 - A2 / Stainless steel		
26	Washer		1.4301		
27	Centre ring		1.4401		

* = Wearing parts (repair kit) * =

** 2 = butt weld ends, short version 2 =
3 = screwed ends 3 =

Other materials available

Änderungen vorbehalten
subject to changes

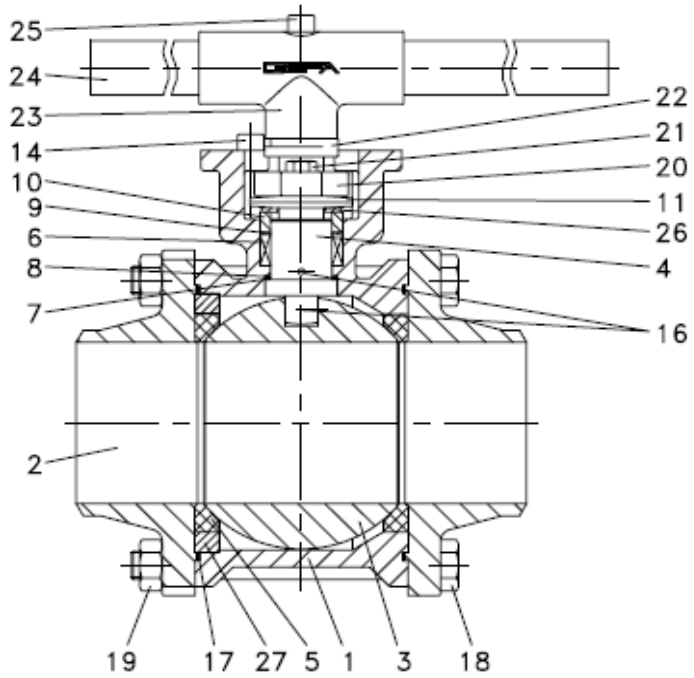

27	Centre ring		1.4401
26	Washer		1.4301
25	Cyl. – screw		A2 / Stainless steal
24	Pipe		Stainless steal
23	T – piece		1.4308
22	Stop plate		1.4308
21	Hexagon screw		A2 / Stainless steal
20	Gland flange		1.4308
19	Hexagon nut		A2 / Stainless steal
18	Stud bolt		A2 / Stainless steal
17	Body seal		Graphite
16	Antistatic device		1.4301
14	Cyl. – screw/nut		A2 / Stainless steal
11	Disk spring washer		1.4310
10	Gland		1.4301
9	Thrust washer		PTFE – Carbon
8	Primary sealing		PTFE – Glass
7	Thrust washer		PTFE – Carbon
6	Stem packing		Graphite
5	Seat		PTFE
4	Stem		1.4401
3	Ball		1.4401
2	End cap		1.4408 / GS – C25
1	Body		1.4408
Pos.:	Description:		Material:

GEFA PROCESSTECHNIK GMBH
Germaniastraße 28 44379 Dortmund

Schutzvermerk nach DIN 34 beachten

Maßstab 1/1

Data sheet

	Datum	Name
2001		
Bearb.	21.03.	HA
Gepr.	21.03.	ZA
Norm		
Rev. gepr. 16.04.2003		

Datenblatt
DG DN65-100 voller Durchg. / full bore
DG DN80-150 red. Durchg. / red. bore
Firesafe

7284-4

Blatt BL

Zust.	Änderung	Datum	Name
b	A1697	16.04.2003	
a	A1409	27.06.2001	ZA

PROCESSTECHNIK GMBH
Germaniastraße 28
44379 Dortmund
Telefon: +49 (0)231/61009-0
E-mail: gefa@gefa.com
Postfach 700110
44371 Dortmund
Fax: +49 (0)231/61009-80
Internet: www.gefa.com

Dimensions
3-pce ball valve series DG1

DN 8 - DN 50
full bore

Mounting plate acc. to DIN 3337 / ISO 5211 - see data sheet „mounting plate“

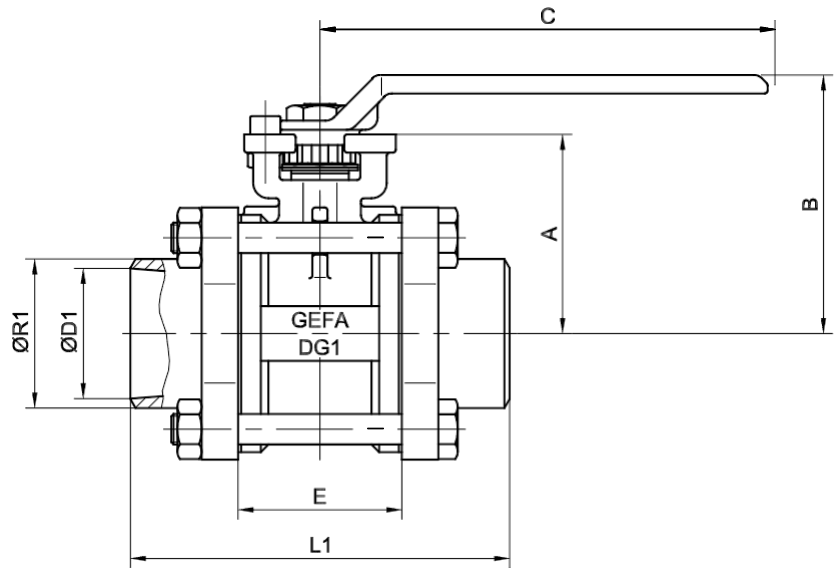

Gewindeende / screwed end

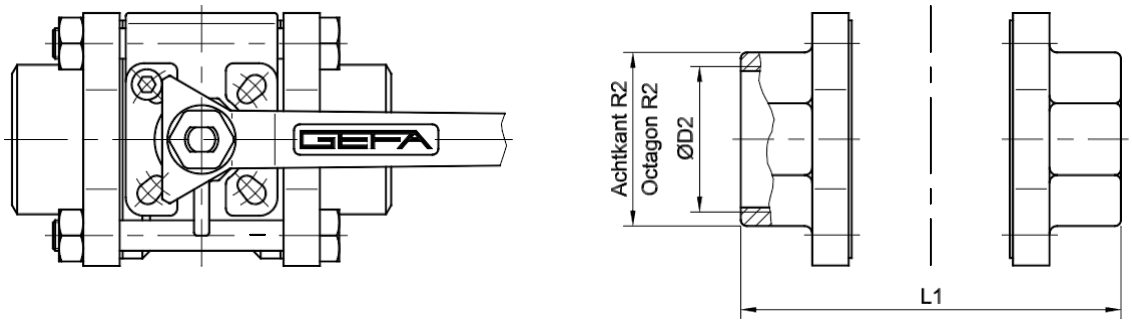

DN	NPS	A	B	C	⌀D1	⌀D2*	E	⌀K	L1	⌀M2	⌀R1	R2	kg
8	1/4“	35	55	120	8	1/4“	21,5	12,7	70	4xM6	14	21	0,5
10	3/8“	35	55	120	13	3/8“	21,5	12,7	70	4xM6	18	24	0,5
15	1/2“	43	60	140	17	1/2“	26	16	75	4xM8	22	29	0,8
20	3/4“	46	65	140	22,3	3/4“	30,5	20	90	4xM8	28	35	1,0
25	1“	50	70	150	28	1“	38	25	100	4xM8	34	42	1,4
32	1 1/4“	61	80	150	37	1 1/4“	44	31,8	110	4xM10	43	52	2,1
40	1 1/2“	66	85	150	42,8	1 1/2“	52	38	125	4xM10	49	57	2,9
50	2“	83	100	190	54,2	2“	65	50,7	150	4xM12	61	71	5,0

Weight including hand lever
* Pipe thread DIN 2999-Rp, ISO 228/1-G

subject to changes

PROCESSTECHNIK GMBH
Germaniastraße 28
44379 Dortmund
Telefon: +49 (0)231/61009-0
E-mail: gefa@gefa.com
Postfach 700110
44371 Dortmund
Fax: +49 (0)231/61009-80
Internet: www.gefa.com

Dimensions
3-pce ball valve series DG1

DN 15 - DN 65
red. bore

" Mounting plate acc. to DIN 3337 / ISO 5211 - see data sheet „mounting plate"

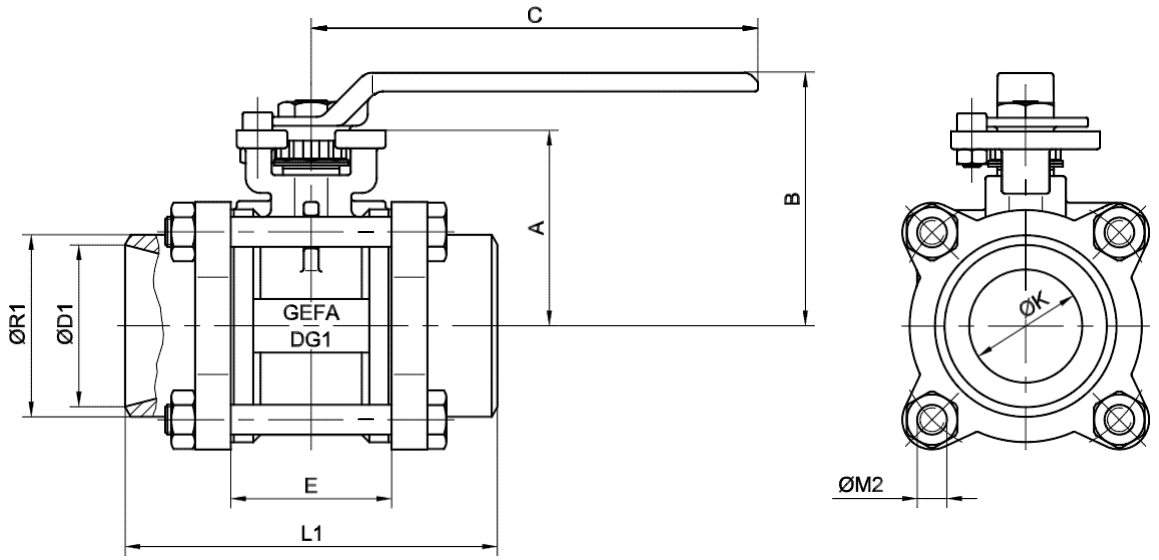

Gewindeende / screwed end

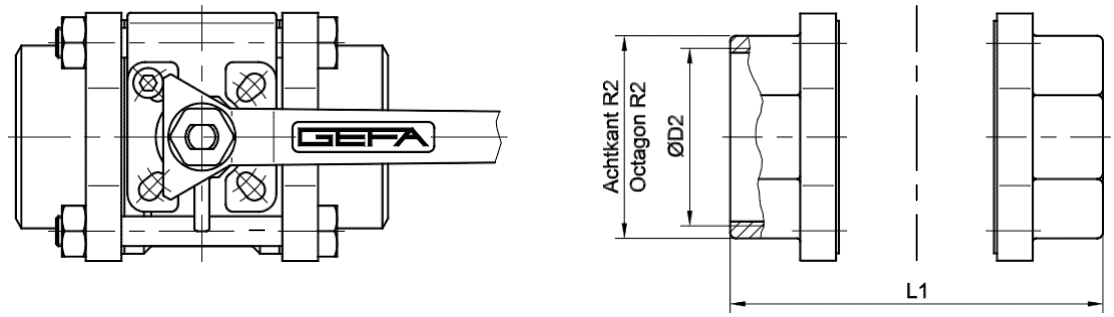

DN	NPS	A	B	C	⌀D1	⌀D2*	E	⌀K	L1	⌀M2	⌀R1	R2	kg
15	1/2"	35	55	120	17	1/2"	21,5	12,7	70	4xM6	22	27	0,5
20	3/4"	43	60	140	22,3	3/4"	26	16	75	4xM8	28	33	0,8
25	1"	46	65	140	28	1"	30,5	20	90	4xM8	34	40	1,0
32	1 1/4"	50	70	150	37	1 1/4"	38	25	100	4xM8	43	49	1,4
40	1 1/2"	61	80	150	42,8	1 1/2"	44	31,8	110	4xM10	49	56	2,2
50	2"	66	85	150	54,2	2"	52	38	125	4xM10	61	68	3,0
65	2 1/2"	83	100	190	65	2 1/2"	65	50,7	150	4xM12	77	87	5,5

Weight including hand lever

* Pipe thread DIN 2999-Rp, ISO 228/1-G

subject to changes

PROCESSTECHNIK GMBH
Germaniastraße 28
44379 Dortmund
Telefon: +49 (0)231/61009-0
E-mail: gefa@gefa.com
Postfach 700110
44371 Dortmund
Fax: +49 (0)231/61009-80
Internet: www.gefa.com

Dimensions

3-pce ball valve series DG1
DN 65 - DN 100
full bore

Mounting plate acc. to DIN 3337 / ISO 5211 - see data sheet „mounting plate“

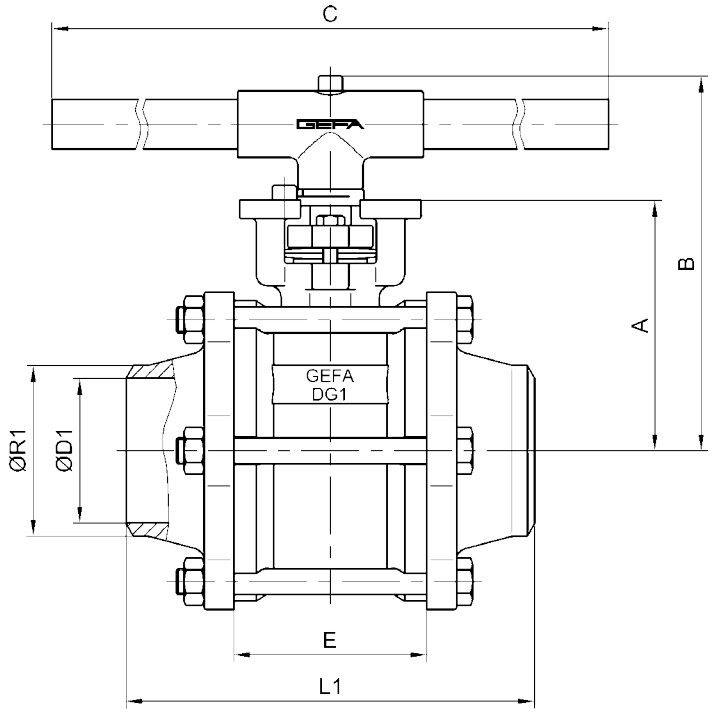

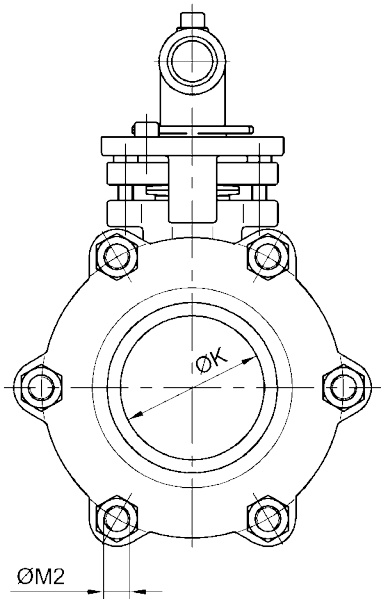

Gewindeende / screwed end

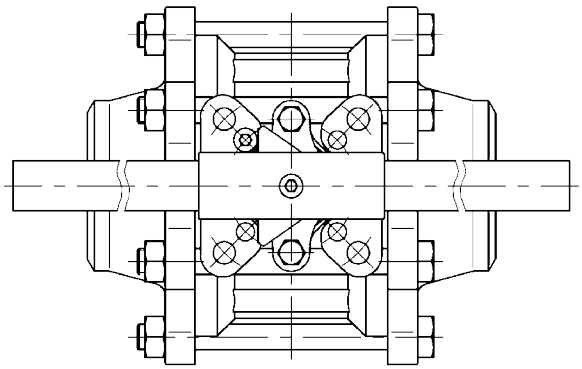

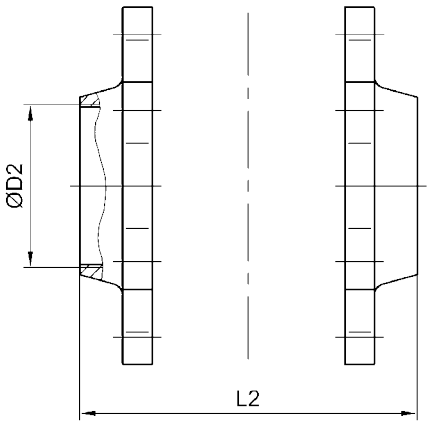

DN	NPS	A	B*	C	⌀D1	⌀D2**	E	⌀K	L1	L2	⌀M2	⌀R1	kg
65	2 1/2“	124	191	400	65	2 1/2“	87	65	190	159	4xM14	76	11,6
80	3“	135	202	400	78	3“	104	80	220	182	6xM14	92	18,2
100	4“	149	216	500	102	4“	125	100	240	217	6xM16	116	27,2

Weight including hand lever

* Option: length increased by 100 mm for insulation

** Pipe thread DIN 2999-Rp, ISO 228/1-G

subject to changes

GEFA
PROCESSTECHNIK GMBH
Germaniastraße 28 Postfach 700110
44379 Dortmund 44371 Dortmund
Telefon: (0231) 61009-0 Fax: (0231) 61009-80

Dimensions

3-pce ball valve series DG1
DN 80 - DN 150
red. bore

Mounting plate acc. to DIN 3337 / ISO 5211 - see data sheet „mounting plate“

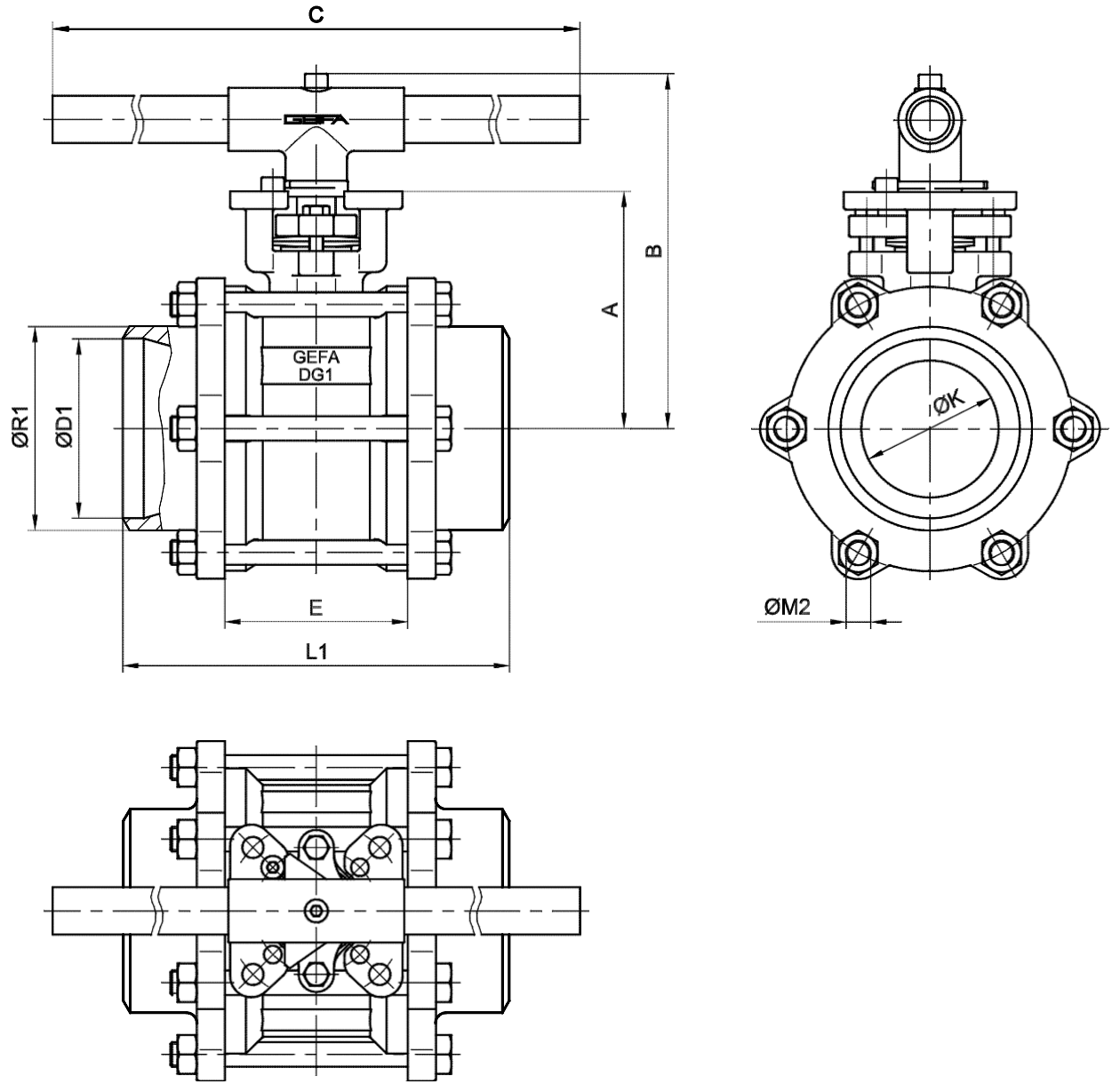

DN	NPS	A	B	C	OD1	E	OK	L1	OM2	OR1
80	3“	124	191	400	78	87	65	190	4xM14	92
100	4“	135	202	400	102	104	80	220	6xM14	116
125	5“	149	216	500	128	125	100	240	6xM16	143
150	6“	149	216	500	154	125	100	240	6xM16	170

subject to changes

GEFA PROCESSTECHNIK GMBH
Germaniastraße 28
44379 Dortmund
Telefon: +49 (0)231/61009-0
E-mail: gefa@gefa.com
Postfach 700110
44371 Dortmund
Fax: +49 (0)231/61009-80
Internet: www.gefa.com

MULTITOP Mounting plate Ball valve series FG / DG

DIN 3337 / ISO 5211

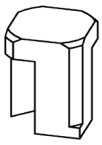

Vierkant–Adapter
Square–adapter

Sicherungskappe
Security cap

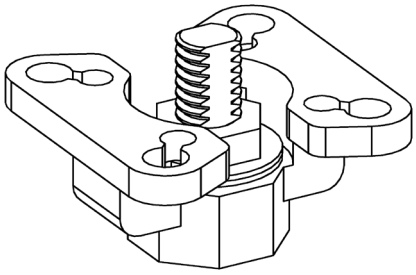

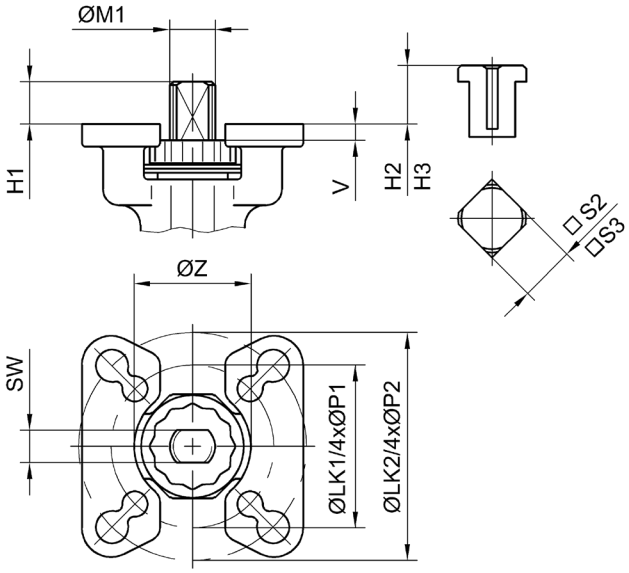

DG1		FG										Square-adapter/				
DN (F)	DN (R)	DN (F)	H1	LK1	LK2	⌀M1	⌀P1	⌀P2	SW	V	⌀Z	DIN 3337 ISO 5211	⌖S2	H2	⌖S3	H3
8 / 10	15	-	7	36	42	8	6	6	5,5	3,5	26	F03/F04	9	10	11	12
-	-	15	8	36	42	9	6	6	7	3	26	F03/F04	9	10	11	12
15 - 25	20 - 32	20	8	42	50	9	6	7	7	3	26	F04/F05	11	12	14	16
32 / 40	40 / 50	25 / 32	9	42	50	11	6	7	8	3,5	31	F04/F05	11	12	14	16
50	65	40 / 50	13	50	70	14	7	9	10	4,5	36	F05/F07	14	16	17	19

(F) = full bore (R) = reduced bore

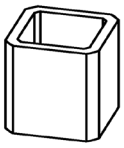

Vierkant–Adapter
Square–adapter

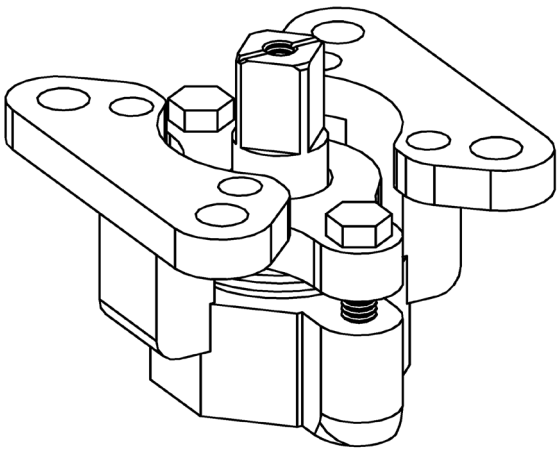

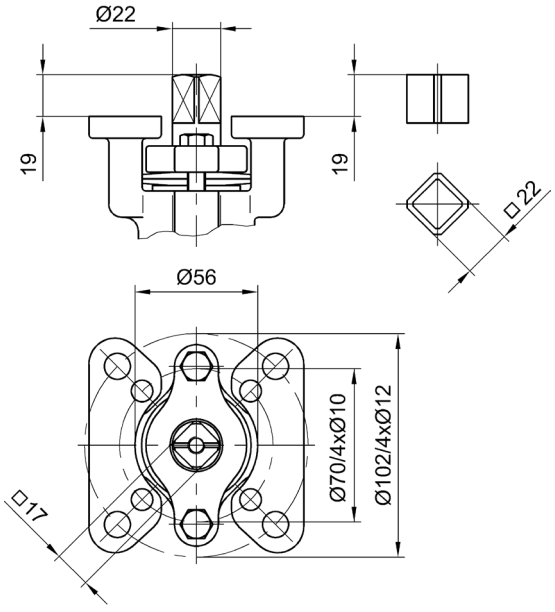

DG1: DN 65 (F) - DN 100 (F)
DN 80 (R) - DN 150 (R)
FG: DN 65 (F) - DN 100 (F)

DIN 3337 / ISO 5211: F07 / F10

subject to changes

GEFA PROCESSTECHNIK GMBH
Germaniastraße 28
44379 Dortmund
Telefon: +49 (0)231/61009-0
E-mail: gefa@gefa.com
Postfach 700110
44371 Dortmund
Fax: +49 (0)231/61009-80
Internet: www.gefa.com

Operating Instructions Installation / Operation Non return valve series RF 6666

Introduction

The following information and instructions are important for perfect installation and safe operation of the non return valve.
Prior to installation and initial use of the valve, the qualified staff in charge of installing and operating the valve has to be instructed according to this information.

Proper use

The non return valve series RF 6666 is exclusively intended for the prevention of medium backflow after installation in the pipeline. The permissible pressure / temperature limits have to be observed.

Nominal pressure:

DN 15 up to DN 100: PN 6 – PN 40
DN 125 / DN 150: PN 10 – PN 40

Limits for metallic connection (RF 6666 M):

Working temperature [°C]	20	100	150	200	250	300	350	400
Permissible working pressure DN 15 – DN 100 [bar]	40	35	32	30	29	28	27	26
Permissible working pressure DN 125 / DN150 [bar]	16	14	13	12	11,5	11	10,5	10,5

Maximum working temperature for soft sealings:

NBR (RF 6666 B): 110 °C
EPDM (RF 6666 E): 150 °C
FPM (RF 6666 V): 200 °C
FEP/FPM (RF 6666 T): 250 °C

The suitability of the product-related parts used and their chemical resistance properties have to be clarified before start-up of the plant.
The usual flow rate must not be exceeded.
Vibrations, water hammers and cavitation as well as abrasive components result in damage of the valve and affect its service life.

Valves must not be used to support the pipeline nor as a step-up.

Earthing the valve

If the non return valve is used in potentially explosive zones, the body of the valve must be connected effectively at site with the potential compensation cable before the valve is put into operation.

Transport and storage

The valve must be transported and stored dry and clean.
In humid rooms, a drying material or heating must be used to avoid condensation.
During transport and intermediate storage the non return valve should not be outside a temperature range of -15°C and +30°C.
The transport packaging protects the valve against soiling and damage. Impact and vibrations must be avoided.

Conditions for mounting the valve

The non return valve series RF 6666 is installed between pipeline flanges acc. to DIN 2501 or ANSI B16.5.

Pipelines always have to be run in such a way that damaging shear and bending stresses cannot act on the valve body.
The surfaces of the pipeline flanges between which the valve is installed have to be parallel to one another, the sealing surfaces must be clean and without damage. No cross marks may be visible.

Do not carry out welding work on the flanges and pipelines when the non return valve has been installed, as this could cause damage to the valve.

The non return valve is clamped between two pipeline flanges using two suitable seals.
Screws, nuts and seals are not included in the manufacturer's scope of supply.

Transport packaging

Transport packaging protects the interior of the valve from soiling and damage.
Do not remove the packaging until the valve is going to be installed.

Installation position

Basically the non return valve series RF 6666 can be installed in any position.
The valve must be installed in such a way that the medium flow is in the direction indicated by the arrow on the body.
A minimum operating pressure is necessary for opening the valve.
Operation without spring is only possible in a vertical pipeline with upward flow.

DN 15 - DN 100

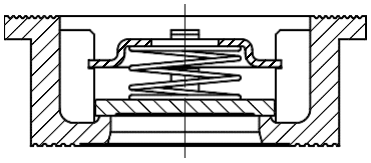

DN 125 / DN 150

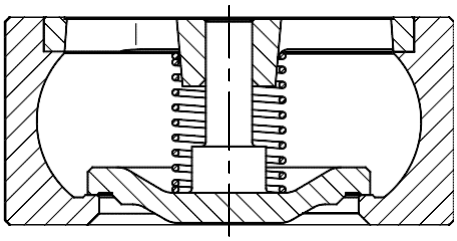

Installation

- Prior to the mounting of the valve, flush the pipeline to remove all traces of soiling, welding residues, etc.
- Remove the transport packaging and check whether the flange connections are without damage and clean.
- Check whether the flange clearance is in accordance with the face-to-face dimension of the non return valve.
- Before mounting the valve, the flanges are to be sufficiently spread using a suitable tool.
- Insert the non return valve and the seals between the flanges.
- Insert the screws and nuts for flange connection.
- Centre the non return valve using the flange screws. The body eccentric ring (DN 15 to DN 100) or the outer diameter of the body (DN 125 / DN 150) of the valve are used for full centring.
- Remove the spreader and hand-tighten the screws.
- Check whether the non return valve, the seals and the counter-flanges are in true alignment.
- Tighten the flange screws crosswise using the stipulated torque.
  The tightening torque depends on the seals chosen.
  If no specifications are given, the following standard values can be used:
  M12 = 52 Nm M16 = 125 Nm M20 = 240 Nm M24 = 415 Nm

Initial operation

The non return valve has been tested for leakage using air or water. Residues of the test medium may still be on the contact surfaces of the valve. Possible reactions with the operating medium must be observed.
Prior to initial operation, the pipeline must be flushed effectively to eliminate soiling and to avoid damage to the sealing surfaces.

Since the non return valve is always closed during a system pressure test on pipeline sections, the testing pressure must not exceed the value 1,1 x PN.

Impermissible operation

Do not operate the valve in the cavitation area.
Do not exceed the pressure/temperature range.
Avoid all foreign particles on the sealing surfaces.

Removing the valve

Before removing the non return valve make sure that the pipe section is depressurised and evacuated.
In case of toxic, caustic and other outgasing media the pipe section must also be ventilated.
Safety classification is the responsibility of the system operator.

The non return valve is removed by loosening the flange screws and sufficient spreading of the mating flanges.

Disposal / repair of the valve

After having removed the valve it has to be disassembled and cleaned to prevent injuries caused by residues of the medium.
If the valve is returned to the manufacturer, a safety data sheet relating to the media must be included.

Subject to modifications without notice.

Edition: 2009-08-06

PROCESSTECHNIK GMBH
Germaniastraße 28
44379 Dortmund
Telefon: +49 (0)231/61009-0
E-mail: gefa@gefa.com
Postfach 700110
44371 Dortmund
Fax: +49 (0)231/61009-80
Internet: www.gefa.com

Rückschlagventil Serie RF 6666
Non return valve series RF 6666
DN 15 – DN 100 / PN 6 - 40

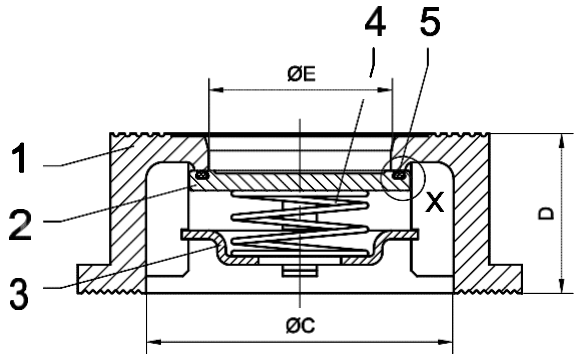

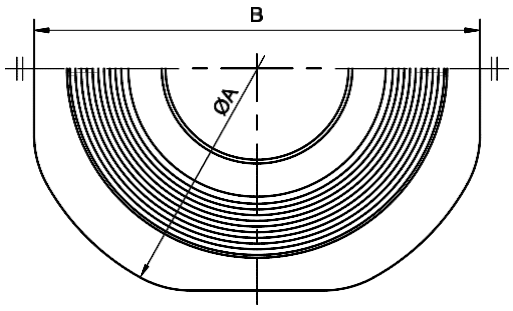

DN 15 – DN 80

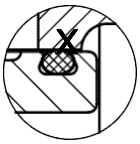

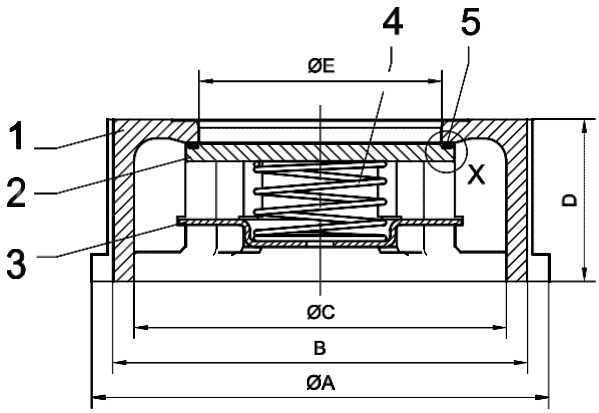

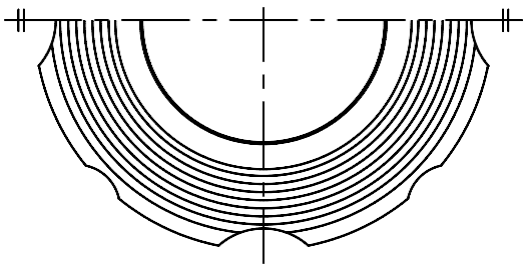

DN 100

DN	15	20	25	32	40	50	65	80	100
ØA	53	63	73	84	94	109	129	144	170
B	45	55	65	78	88	98	118	134	154
ØC	29	36	44	54	65,5	78	99	117	138
D	16	19	22	28	31,5	40	46	50	60
ØE	15	20	25	32	39	48	62	75	90
kg	0,1	0,15	0,25	0,5	0,7	1,1	1,5	2,5	3,7

* Sandwich type
* Low noise
* Low pressure loss
* Any position of installation
* High reliability
* Long service life
*
*
*
*
*
*

Part no.	Description		Material	
			RF 6666 M	RF 6666 E
1	Body		1.4408	1.4408
2	Valve plate		1.4571	1.4571
3	Spring holder		1.4571	1.4571
4	Spring		1.4571	1.4571
5	O-Ring			EPDM (E) - NBR (B) FPM (V) - FEP/FPM (T)

Special executions in Titanium, Hastelloy, Teflon, etc. on request.

Subject to changes.

Non return valve series RF 6666
DN 15 – DN 100 / PN 6 – 40

GEFA PROCESSTECHNIK GMBH

Pressure loss curves/
(referred to water at 20°C/)

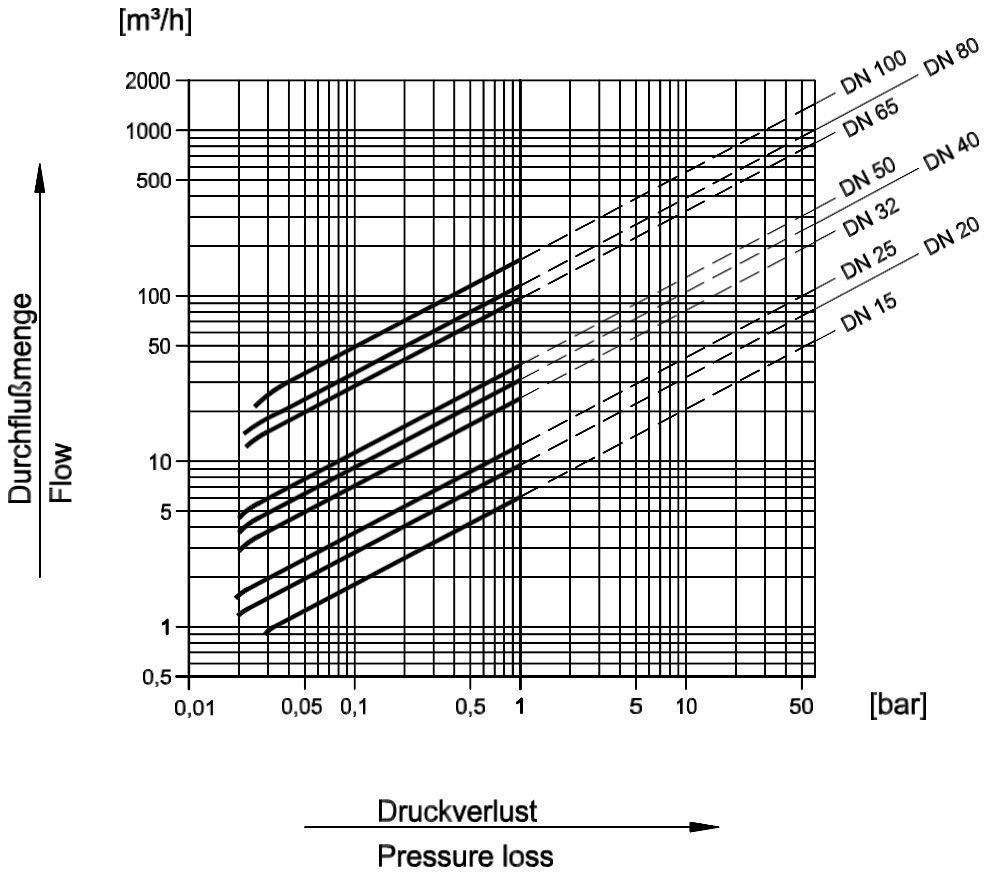

Opening pressures [mbar] /

DN	Flow direction		
	↑	→	↓
15	32	29	26
20	37	34,5	32
25	35	32	29
32	35	31	27
40	30	26	22
50	38	34	30
65	41	35	29
80	49	42,5	36
100	37	31	25

Installation /

max. working pressure 40 bar
max. working temperature up to 400°C (depending on materials)

GEFA
PROCESSTECHNIK GMBH
Germaniastraße 28
44379 Dortmund
Telefon: +49 (0)231/61009-0
E-mail: gefa@gefa.com
Postfach 700110
44371 Dortmund
Fax: +49 (0)231/61009-80
Internet: www.gefa.com

Non return valve series RF 6666

DN 125 – DN 150 / PN 16

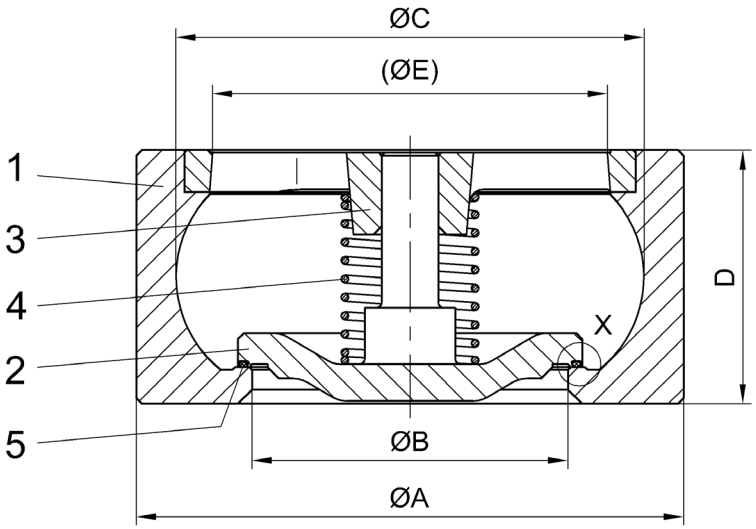

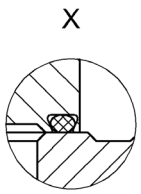

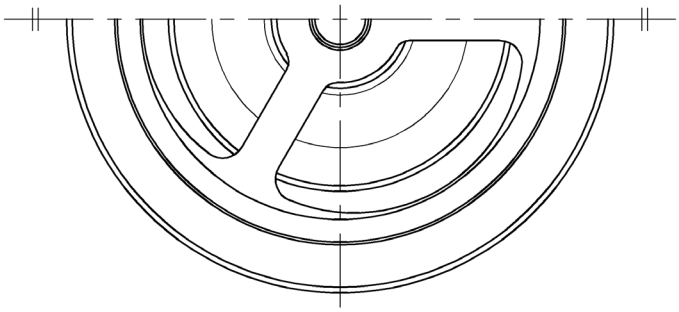

* Sandwich type
* Low noise
* Low pressure loss
* Any position of installation
* High reliability
* Long service life
* Face to face dimension acc. to EN 558-1 line 49 (DIN 3202-K4)

DN	125	150
ØA	194	220
ØB	112	132
ØC	166	195
D	90	106
ØE	140	160
kg	10	14

Part no.	Description		Material	
			RF 6666 M	RF 6666 E
1	Body		1.4408	1.4408
2	Valve plate		1.4408	1.4408
3	Support		1.4408	1.4408
4	Spring		1.4571	1.4571
5	O-Ring			EPDM (E) - NBR (B) FPM (V) - FEP/FPM (T)

Special executions in Titanium, Hastelloy, Teflon, etc. on request.

Subject to changes.

SERIES-EFR

ANSI

CE

Ex II 2 G D c

REVIEW CONTROL

PROCEDURE REF.: DOC.MMM700E

REV.	DATE	CARRIED OUT BY	APPROVED BY	DESCRIPTION
0	12/03/2001	C.Gallardo	J.Tejedor	General adaptation to EC Directive
1	20/06/2002	C.Gallardo	J.Tejedor	Add important note page 8 Chart removal page 14
2	12/12/2003	C.Gallardo	J.Tejedor	Incorporation of the ATEX Declaration page 5
3	16/02/2005	J.Rubio	J.Tejedor	Update of improvements (add position 72 & 39)
4	28/09/2005	J.Rubio	J.Tejedor	Add LCC material (page 7)
5 & 6	09/04/2008	J.Rubio	J.Tejedor	Updates in EN Standards, page 5-6 Add section “Environmental Considerations” page 7
7	10/05/2011	D. Grau	J. Tejedor	Update of Standards, working temperatures and drawings.

CONTENTS

1.- APPLICABLE RANGE ..... Page 4

2.- GENERAL INFORMATION ..... Pages 5-8
- ⑨ STATEMENT
- ⑨ DESCRIPTION OF APPLICABLE EQUIPMENT ⑨ TECHNICAL STANDARDS
- ⑨ SCOPE OF USE
- ⑨ ENVIRONMENTAL CONSIDERATIONS
- ⑨ DESIGN CONDITIONS

3.- INSPECTION AT RECEPTION AND STORAGE ..... Page 9

4.- INSTALLATION ..... Pages 9-10

5.- PREVENTIVE MAINTENANCE ..... Page 10

6.- MAINTENANCE OPERATIONS ..... Page 11
- ⑨ PRECAUTIONS

7.- REASON FOR PARTS REPAIR AND REPLACEMENT ..... Pages 11-15
- ⑨ LEAKAGE THROUGH THE PACKING
- ⑨ LEAKAGE THROUGH THE BODY-TAILPIECE SEAL
- ⑨ LEAKAGE THROUGH THE PACKING IN VALVES WITH DOUBLE PACKING
- ⑨ CHANGE OF THE PACKING
- ⑨ CHANGE OF THE SEATS, PACKING AND SEALS
- ⑨ CHANGE OF THE PACKING, SEATS AND SEALS IN VALVES WITH DOUBLE PACKING

8.- MAXIMUM GLAND NUT TIGHTENING TORQUE ..... Page 16

9.- NUTS AND BOLTS TIGHTENING TORQUE ..... Page 16

10.- EXPLODED VIEW OF SOFT SEATED VALVES Pages17-18
- ⑨ FIG. 715 (DN-1/2" ~ 10") / FIG. 730 (DN-1" ~ 8")
- ⑨ FIG. 715 (DN-12")

11.- EXPLODED VIEW OF DOUBLE PACKING VALVE ..... Page 19

12.- EXPLODED VIEW OF CRYOGENIC SERVICE VALVE ..... Page 20

13.- EXPLODED VIEW OF AUTOMATED VALVE ..... Page 21

1.- APPLICABLE RANGE

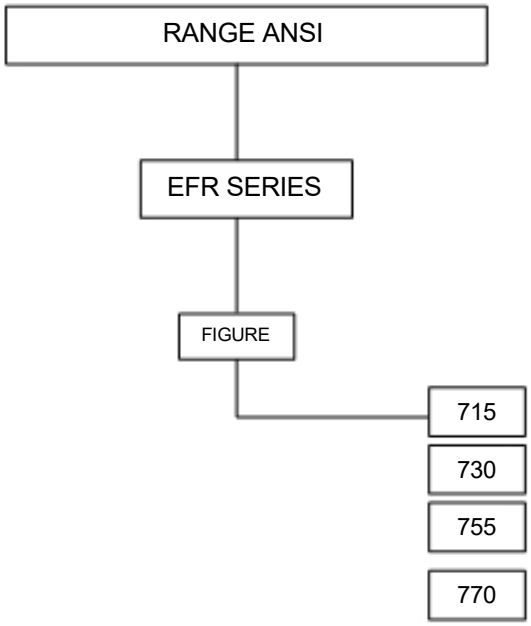

2.- GENERAL INFORMATION

2.1 STATEMENT

JC EFR Series Ball Valves have been designed and manufactured for the use, circulation and control of fluids in those industrial processes in which conditions are suitable for the performance levels of the valves, according to the applicable standards.

Steel & Stainless Steel Valves DN greater than 25

JC Fábrica de Válvulas, S.A states that JC valves covered by this certificate have been designed and manufactured according to the following European Directive requirements:

- European Pressure Equipment Directive 97/23 EC: Evaluation Procedure of Conformity Mod H Cat III, certified by Bureau Veritas nº CE-PED-H-JCV 001-04-ESP. Marking CE0062 Cat III Mod H.
- Directive 94/9 EC ATEX, classification Group II, Cat 2 for use in explosive atmospheres, areas 1,2 & 21,22. Evaluation of conformity according to Appendix VIII. Marking CE Ex II2GDc.

Applied harmonized and non-harmonized technical Standards:

- EN 10213, EN 10204, EN12266-1, EN 15848-1 & (2)*, EN ISO 17292, EN 1983, EN 19 :2002, others, see JC's Catalogue and Assembly & Maintenance Procedures.

- EN 13463-1:2001, EN 1127-1.

The electrical and mechanical extras are not covered by this statement and will have to carry their own in order to be assembled with JC valves.

Steel & Stainless Steel Valves DN lower than 32

JC Fábrica de Válvulas, S.A states that JC valves covered by this certificate have been designed and manufactured according to the following European Directive requirements:

- European Pressure Equipment Directive 97/23 EC: classified according article 3, part 3, cat SEP, must not carry the CE label.
- Directive 94/9 EC ATEX, classification Group II, Cat 2 for use in explosive atmospheres, areas 1,2 & 21,22. Evaluation of conformity according to Appendix VIII. Marking CE Ex II2GDc.

Applied harmonized and non-harmonized technical Standards:

- EN 10213, EN 10204, EN12266-1, EN 15848-1 & (2)*, EN ISO 17292, EN 1983, EN 19 :2002, others, see JC's Catalogue and Assembly & Maintenance Procedures.

- EN 13463-1:2001, EN 1127-1.

The electrical and mechanical extras are not covered by this statement and will have to carry their own in order to be assembled with JC valves.

The suitability of the materials and the design of the type of valve in terms of their working conditions is the responsibility of the end user of the valve.

* on request

EFR SERIES FOR ANSI DESIGN

2.2 DESCRIPTION OF THE APPLICABLE VALVES

Category III Module H (ISO EN 9001)

Series	Body	Ball	Bore	Class	JC Fig.	DN	Flanges
EFR	Two pieces	Floating	Reduced	150	715 755	1/2"- 12"	RF Stock Finish
				300	730 770	1" - 8"	

2.3 APPLICABLE TECHNICAL STANDARDS

EN 19: Marking of general purpose industrial valves
EN 558: Face-to-face and centre-to-face dimensions of metal valves for use in flanged pipe systems Part 2: Class-designated valves
EN 1503-2: Valves - Materials for bodies, bonnets and covers - Part 2: Steels other than those specified in the European Standards.

Fire Safety Certificate:	BS 6755 Part 2 / API 607 6th Edition / API 6FA / ISO 10497
Valves Design:	API 6D / ASME B 16.34 / EN 1983 / EN ISO 17292
Body Design:	ASME VIII Div 1
Shell thickness:	ASME B 16.34 / BS ISO 17292
Flanges:	ASME B 16.5
Face-to-face Dimensions:	ASME B 16.10 / API 6D
Shell finishing quality:	MSS SP 55
Wetted parts, Materials and Bolting:	NACE MR 01.75
Marking:	EN 19 / API 6D / EN ISO 17292
Pressure Testing:	API 598 / ISO 5208 / EN 12266
Actuator Mounting Flange:	ISO - EN 5211
Fugitive emissions:	EN 15848-1 & (2)*

* on request

2.4 SCOPE OF INSTALLATION ACCORDING TO THE TYPE OF FLUID (DANGEROUS FOR THE ENVIRONMENT OR HUMAN HEALTH)

GROUP 1 CLASSIFICATION

.- The incorporation of additional safety elements “Double packing” is recommended for the range of products included in Group 1.

.- The use of valves without additional safety devices in Group I will be the responsibility of the user or the purchaser, as well as the advisability of installing leakage detection systems.

GROUP 2 CLASSIFICATION

.- Carbon Steel valves will not be used in corrosive fluid lines.

Warning is given that when the use of fluids that could cause damages to human's health, the environment or property, then the necessary safety elements to prevent risks must also be used!

ENVIRONMENTAL CONSIDERATIONS:

According to the premises marked by the ISO 14000 Regulations and the environmental policy of JC Fábrica de Válvulas.

The recyclability of the components that form part of JC valves is the following:

Recyclable components:

Metal parts, PTFE (hard), plastic plug (low-density polyethylene).

Non-recyclable components:

PTFE mixed with other compounds (Glass-fiber, graphite, etc…), nylon, graphite and graphite mixed with metal.

2.5 DESIGN CONDITIONS

SERIES EFR FOR CLASS-DESIGNATED VALVES
API 6D / ANSI B 16.34 / BS EN ISO 17292 / EN 1983

CLASS 150 - ISO PN 20

	Unit	A216 WCB	A351 CF8M	LCC
Class	psig	150		
Design Temp.	ºC	-29 / 230 (see Note 1)	-50 / 230 (see Note 1)	-46/230
Design Pressure	psi/N/mm²	285/1.965	275/1.896	290/1.999
Test Temp.		Ambient		
Test Pressure	Psi/N/mm²	428/2.947	412/2.844	435/3.002
Castings quality factor		0.8		

CLASS 300 - ISO PN 50

	Unit	A216 WCB	A351 CF8M	LCC
Class	psig	300		
Design Temp.	ºC	-29 / 230 (see Note 1)	-50 / 230 (see Note 1)	-46/230
Design Pressure	Psi/N/mm²	740/5.102	720/4.964	750/5.170
Test Temp.		Ambient		
Test Pressure	Psi/N/mm²	1110/7.653	1080/7.446	1125/7.75
Castings quality factor		0.8		

Note 1: Seats in PTFE. For other seats material consult the JC catalogue or the manufacturer.

3.- INSPECTION AT RECEPTION AND STORAGE

3.1 All of the valves will be examined on reception, to ensure that they have not suffered any damages during transport, and the supplier will immediately be informed of any damages observed.

3.2 The valves leave the factory in open position as a measure of protection and to ensure that no foreign body can damage the ball, excepting the fail to close actuated valves that close when they lack air or current. (Actuator normally closed)

3.3 WARNING!
The valves will be stored under cover and protected from inclement weather conditions and foreign bodies.

3.4 The valves will not be unpacked until they are to be definitively installed, except for purposes of inspection. After inspection they will be packed again.

4.- INSTALLATION

4.1 The handling and transporting of the valves must be carried out with extreme precaution and using the necessary and adequate means on the basis of their size and weight, in this way avoiding any risks to the persons that handle them.

4.2 WARNING!
Never use a wrench to hold the valve during handling, assembly or transport.

Check the condition of the valve, firstly to detect any possible damages caused during their transport and/or handling.
Likewise inspect the inside of the valve, as well as the interior of the pipe that connects up to the valve. It is of utmost importance that there are no foreign bodies that could damage the valve seats, insofar as these parts are fundamental to the correct operation of the valve.

WARNING!
When it is known or assumed that the valve is to be installed at a collection point for waste, such as welding slag, rust or scale, protective filters or screens must be placed, temporarily or definitively (depending on the installation), upstream, before connection with the valve.

The valve must be installed in such a way that it is accessible for the necessary periodic inspection and maintenance required, guaranteeing the performance levels for which it has been designed.

JC Standard EFR Series construction, up to -20ºC have been designed without any fluid direction preference - “They are Bi-directional”.

When the valves have been specifically designed, even being a part of the EFR Series, to work at temperatures below -20 ºC or even -46 ºC (LOW TEMPERATURE), the valves will be “Unidirectional” and will bear an identifying plate that indicates the fluid flow direction.

The valve can be installed with the stem in any position, although it is recommended that this be done in a vertical position, with the stem pointing upwards.

WARNING!
The valves must not support stress from the piping, the installation must be carried out ensuring correct alignment and parallelism in order to ensure that it is not subject to any unexpected stress.

Make sure when installing the valve that the flange seal that connects up to the valve is correctly fitted, following the seal manufacturer's instructions, also ensuring that it is compatible with the circulating fluid.

IMPORTANT!
After installation run a final check on the valve, opening and closing it to make sure that it is working perfectly.

WARNING!
Make sure that the fluid used in cleaning operations and the way in which the cleaning is done are compatible with the installed valve.

Having done the final cleaning operations prior to bringing the valve on-line, if protective filters have been installed they can be removed or, on the other hand if the user considers that rust or scale formations may be encountered, they must be left permanently in place.

IMPORTANT!
When ball valves are destined to end line, you should reduce the hydrostatic proof pressure of the line to 1,1 Rating pressure.

5.- PREVENTIVE MAINTENANCE

5.1 Preventative maintenance operations essentially consist of periodic inspections to ensure that the valve is working correctly.

5.2 The valves must be opened and closed at least once every 6 months and, should such be required on the basis of the fluid or the application of the valve and its importance, opening and closing check plans will have to be established for shorter periods.

5.3 The user will be responsible for establishing opening and closing plans that are adequate for the work conditions and the fluids used!

5.4 WARNING!
Never leave the valves open or closed for a long period of time.

5.5 A very high torque increase could be due to the inclusion of foreign bodies in the seats. It is important not to force the valve! Proceed with an inspection of the seats in order to avoid damaging the ball.

5.6 We advise replacement of the seals and the seats whenever an in-depth revision of the installation is made.

6.- MAINTENANCE OPERATIONS

PRECAUTIONS BEFORE DISASSEMBLY!

Make sure that the line has been closed and depressurised.
Open and close the valve several times in order to release the pressure and drain the valve cavity.

WARNING!
Wear protective clothing adequate for the circulating fluid. (Comply with the safety guidelines laid down by the company!)

Remove the valve from the line in the closed position, and clean off any remaining fluid.

The replacement of parts must be done using original JC spare parts!

The manufacturer will not be responsible for the malfunctioning of the valve if original JC parts are not used!

7.- REASONS FOR PARTS REPAIR AND REPLACEMENT

7.1 LEAKAGE THROUGH THE PACKING

7.1.1 If a leakage is observed through the packing:

- For valves up to DN-10": Open-out the rib on the locking washer (46) and tighten the gland nut (7) by an eighth of a turn.
  Repeat this operation if the leakage persists, then return the rib to its original position. If there is still a leakage replace the packing (11).
- For DN-12" valves: Open the gland (10A) by loosening the bolts (26).
  Repeat this operation if the leakage persists. If there is still a leakage replace the gland packing (11).

7.2 LEAKAGE THROUGH THE BODY / TAILPIECE SEAL

7.2.1 If a leakage is detected in the body seal (13) then the seal must be changed. Follow the instructions in point 7.5.

7.3 LEAKAGE THROUGH THE PACKING IN VALVES WITH DOUBLE PACKING

7.3.1 If a leakage is detected in the stem packing lantern ring, as an emergency measure follow the instructions given in point 7.1.1. In continuation replace packings and the stem O'rings, following the procedure indicated in point 7.6 "Change of the packing in valves with double packing".

7.4 CHANGE OF THE PACKING

We recommend that whenever it is necessary to change the packing, the seats should also be replaced, along with the body seal and stem thrust washers. Nevertheless, should it not be possible to disassembly the valve due to process needs, then the following sequence should be carried out:

DISASSEMBLY

7.4.1 Make sure that the installation is not under pressure.

7.4.2.a For valves up to DN-10": Disconnect the handle (6), or actuator, open-out the rib on the locking washer (46), in order to remove the gland nut (7), take off the locking washer (46), the disk springs (8) and the spacer (41), should there be one. Take off the stop (9), marking its top side for reassembly, the thrust washer (18) and the gland (10). Remove the packing (11) without damaging the stem and body surfaces.

7.4.2.b For DN-12" valves: Disconnect the actuator, the locking washer (471), the spring protector (58), the spring (8), the gland (10A) by loosening the bolts (26) and the gland (10). Remove the packing (11) without damaging the stem and body surfaces.

7.4.3 Fit a new packing (11).

ASSEMBLY

Fit a new packing (11).

7.4.4.a For valves up to DN-10": Refit the gland (10), the new thrust washer (18), the stop (9) with the marked side facing up, the spacer (41), should there be one, the disk springs (8), the locking washer (46) and tighten the gland nut (7) up to the torque indicated in point 8.

7.4.4.b For DN-12" valves: Refit the gland (10), assemble the gland (10A) tightening the bolts (26), replace the spring (8), the spring protector (58) and the locking washer (471).

7.4.5 Before refitting the handle, or actuator, check the valve under pressure to ensure the seal of the packing. If a leakage is detected refer to point 7.1.1. Finish off by bending back the rib of the locking washer (46) for valves up to DN-10".

7.4.6 Refit the handle (6), or actuator.

7.5 CHANGING THE SEATS, PACKING AND SEALS

DISASSEMBLY

7.5.1 Make sure that the installation is not under pressure.

7.5.2 Remove the valve from the line. If the circulating fluid is noxious or inflammable precautions must be taken to avoid accidents.

7.5.3.a For valves up to DN-10": Remove the body connector (2), making use of the notches made inside it. Bear in mind that there may be fluid trapped in the body cavity.

7.5.3.b For DN-12" valves: Remove the hex-nuts (28) joining the body to the tailpiece, bearing in mind that there may be fluid trapped in the body cavity. Detach the tailpiece (2) from the body (1).

7.5.4.a For valves up to DN-10": Remove the seat (5) from the insert (2) and the seals (13) and (74) from the body - body connector.

7.5.4.b For DN-12" valves: Remove the seat (5) from the sidepiece (2) and the seal (13) from the body - sidepiece.

7.5.5 Turn the ball (3) to the closed position and remove it from the body. Clean the exterior surfaces of the bore and the slot, making sure that the pressure release needle at the bottom is not plugged.
Check the exterior surface of the ball, particularly the area in contact with the seats and the radius of transition between the exterior surface and the bore. If the surface of the ball or the slot are damaged , replace the ball with a new one.

7.5.6 Remove the seat (5) from the body.

7.5.7 Disassemble the stem (4), for this operation follow points 7.4.2 and 7.4.3. Then extract the stem through the inside of the body. Remove the thrust washer (12). The stem will incorporate one or two (see figures) O'rings (72) which must also be replaced.

7.5.8 Clean the interior surfaces of the body and the tailpiece, particularly in the areas that hold the seats, the body seal, thrust washer and packing.

7.5.9 Clean and check the stem. Check that the antistatic device is working, by pushing the balls inwards in their housing and making sure that they return to their original position. If any of the balls are seized, or the stem surface is damaged, replace the stem with a new one.

ASSEMBLY

Before reassembling all of the parts make sure that they have not suffered any damage and that both the parts and the interior of the valves are completely clean.
Make sure that the spare parts are JC originals, made of the same materials and with the same dimensions as the parts being replaced.
For valves manufactured before 1983, the spares may be different from those for current models. The stems have also changed their length. In case of whatsoever doubt consult your regular supplier.

WARNING!
If the valve has to be degreased (Oxygen, Hydrogen Peroxide, etc. Services.) consult the manufacturer.

7.5.10 Fit the thrust washer (12) to the stem (4). The spare parts set includes two thrust washers. For some of the nominal diameters they are the same while in others they are different. Should they be different then this thrust washer (12) is the one with the thicker gauge.
Fit the O'ring (72) (two depending on the figure) into the stem slot.

7.5.11 Insert the stem (4) into its housing inside the body.

7.5.12 Assemble the packing and the other parts according to points 7.4.4, 7.4.5 and 7.4.6

7.5.13 Fit a new seat (5) to the body.

7.5.14 Turn the stem to the closed position so that it can be inserted into the slot in the ball (3).
Fit the ball (3) into place in the closed position, make sure that there is no play between the ball slot and the stem.

7.5.15a For valves up to DN-10": Insert the other seat (5) into the body connector (2) and the seals (13) and (74) into their respective housings in the body.
Make the body connector (2) up onto the body (1) until the flange of the body connector is metal-to-metal with the body (1). Flange height 1.6 mm.

7.5.15b For DN-12" valves: Insert the other seat (5) into the tailpiece (2), and the body - tailpiece seal (13) into its housing in the body.
Adjust the tailpiece (2) onto the body (1). Make sure that the holes of the two flanges are in the same position with regard to the valve's axis of symmetry.
Make up the hex-nuts (28) following the most adequate sequence (See the nut tightness torque chart in point 9).

7.5.16 Fit the handle (6), or actuator.

7.5.17 Before reassembling the valve in the line, make sure that it is a half-open position in order to check the packing and the body seal, and then close it, checking the seal-tightness of the seats.

7.6 CHANGING THE PACKING IN VALVES WITH DOUBLE PACKING

We recommend that when a packing change is necessary that all of the seats, body seals, O'rings and stem thrust washers should also be changed. Nevertheless should it be the case that it is not possible to remove the valve from the line, as a result of process needs, follow the sequence indicated below:

DISASSEMBLY

7.6.1 Make sure that the installation is not under pressure.

7.6.2 Remove the handle (6), or actuator, open-out the rib on the locking washer (46), remove the gland nut (7), take off the safety washer (46), the disk springs (8) and the spacer (41), should there be one.
Take off the stop (9), marking its topside for reassembly, and the thrust washer (18).

7.6.3 Remove the bolts (933.1) with their washers (127) to separate the neck (68) from the body of the valve. Remove the seal (40).

7.6.4 Withdraw the stem (4) from the neck and then remove the following parts in this order:

- The gland (10) and the O'ring (72.1) -
- The gland packing (11)
- The packing collar (64)
- The other graphite gland packing (11)

7.6.5 Continue to disassemble the following parts from the stem:
- O'ring (72.2)
- Thrust washer (12)
- The two O'rings (72)

7.6.6 Remove the guide collar (39) from the body.

ASSEMBLY

Before reassembling the new parts clean both the parts and their housings with the utmost care:
- The gland in the body
- The O'rings on the stem
- The graphite gland packing, etc. on the neck

7.6.7 Fit the guide collar (39) in place, lightly greased, in its housing on the body (1).

7.6.8 Fit the O'rings (72) and (72.2), lightly greased, onto the stem (4).

7.6.9 Place the thrust washer (12) onto the stem and insert it into the neck (68).

7.6.10 Fit the seal (40) into place on the body.

7.6.11 Fit the neck and stem assembly into place on the body (1), fit the safety washers (127) into place on the bolts and make them up.

7.6.12 Assemble the following parts into the packing housing in the neck, as follows:
- Fully insert the graphite gland packing (11).
- Insert the packing collar (64) and a second graphite gland packing (11). -
Fit the gland (10) with its O'ring (72.1).
- Fit the thrust washer (18), the stop (9), the spacer (41), the disk springs (8), the locking washer (46), the gland nut (7) and make them up to the torque indicated in point 8.

7.6.13 Before fitting the handle, or actuator, pressure test the valve to ensure the seal-tightness of the packing. If a leak is detected follow the steps indicated in point 7.1.1.

7.6.14 Attach the handle (6), or actuator.

8.- MAXIMUM GLAND NUT TIGHTNESS TORQUE, in mKp.

NOMINAL DIAMETER	PTFE PACKING	GRAPHITE PACKING
1/2"	2	2.2
3/4"	2	2.2
1"	2	2.2
1.1/2"	2.5	2.5
2"	4	4
3"	6.5	7
4"	7.5	8
6"	8	8
8"	8.5	9
10"	9	9

9.- TIGHTNESS TORQUE CHART FOR BODY/TAILPIECE UNION STUDS AND HEX-NUTS, VALUES IN MKG.

ANSI ASSEMBLY UNC THREAD (**)

Elastic Limit 0.2% (Kg/mm²)	21	55	72.4	55
Material	B8/B8M	L7M	B7	B7M
Stud Ø				
3/8”	1.57	4	5.44	4
7/16”	2	5.5	7.4	5.5
1/2”	2.6	7	9.5	7
9/16”	4.2	11	15	11
5/8”	6.3	16.5	22.5	16.5
3/4”	10	27	37	27
7/8”	16.8	44	59	43
1”	25	65	87	72
1.1/8”	35	93	125	93
1.1/4”	48	128	171	128
1.3/8”	70	167	223	167
1.1/2”	95	247	330	247

(*) LUBRICATION WITH SAE 10 AND A LOAD NO HIGHER THAN 80% OF THE ELASTIC LIMIT IS ASSUMED.

(**) A FRICTION COEFFICIENT OF 0.12 AND 75% OF THE ELASTIC LIMIT IS ASSUMED

10.- SOFT VALVE SEAT

10.1.- Fig. 715 (DN-1/2" ~ 10") & Fig. 730 (DN-1" ~ 8")

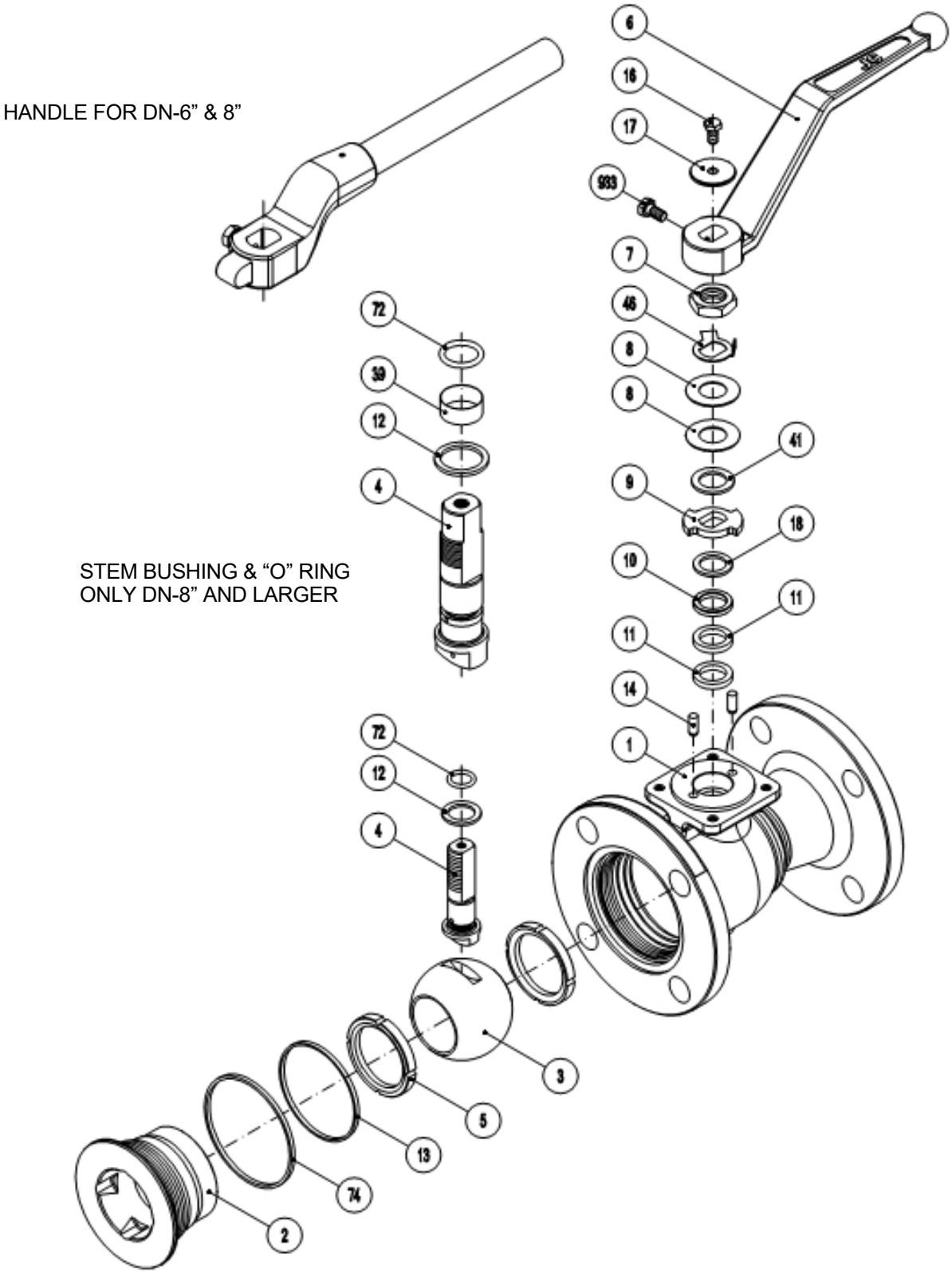

10.2.- Fig. 715 DN-12”

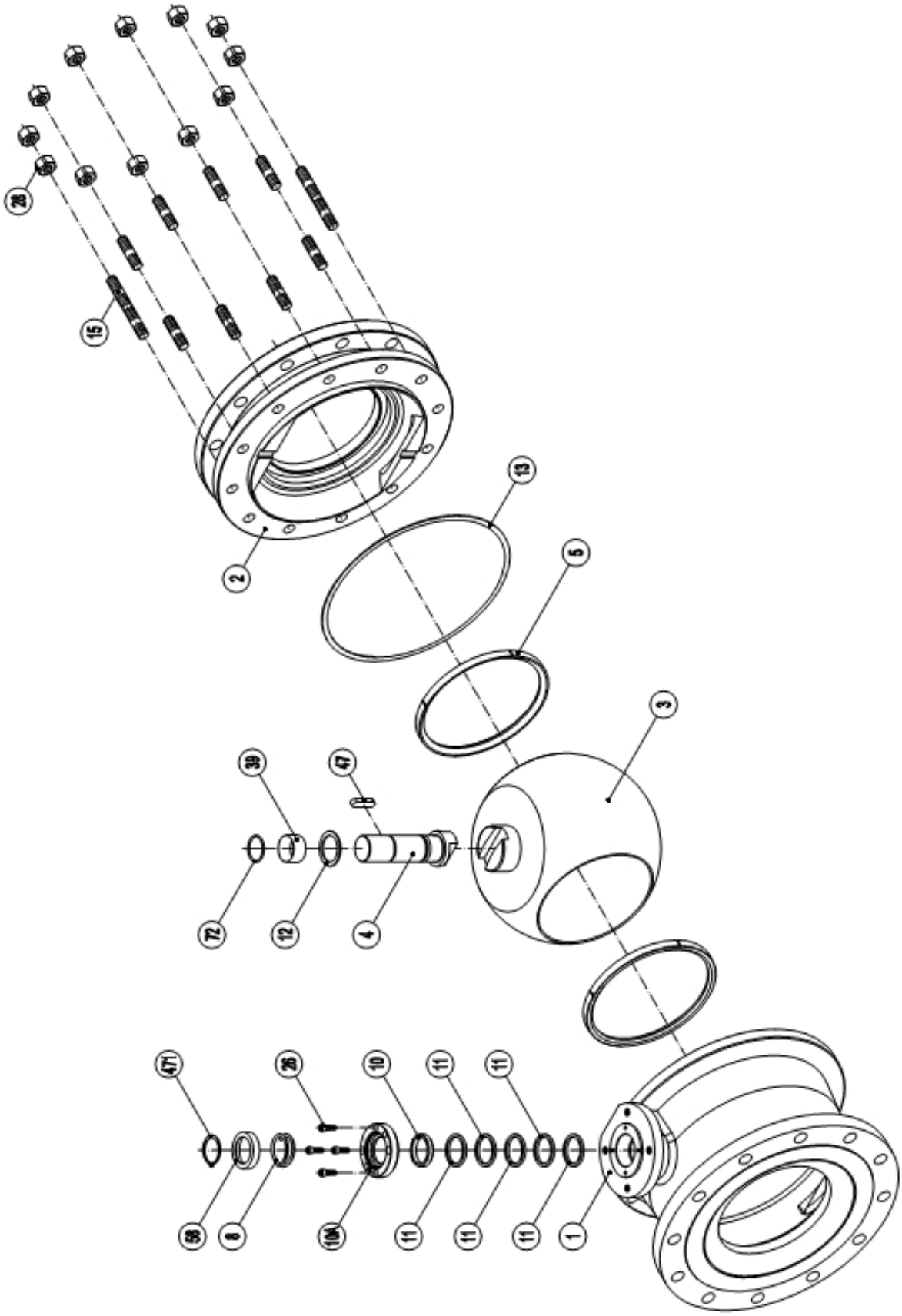

11.- VALVE WITH DOUBLE PACKING

HANDLE FOR DN-6" & 8"

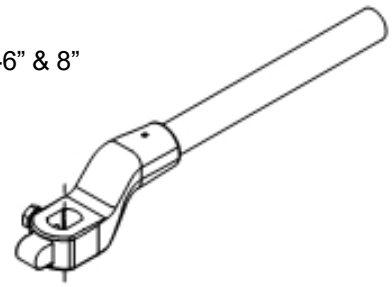

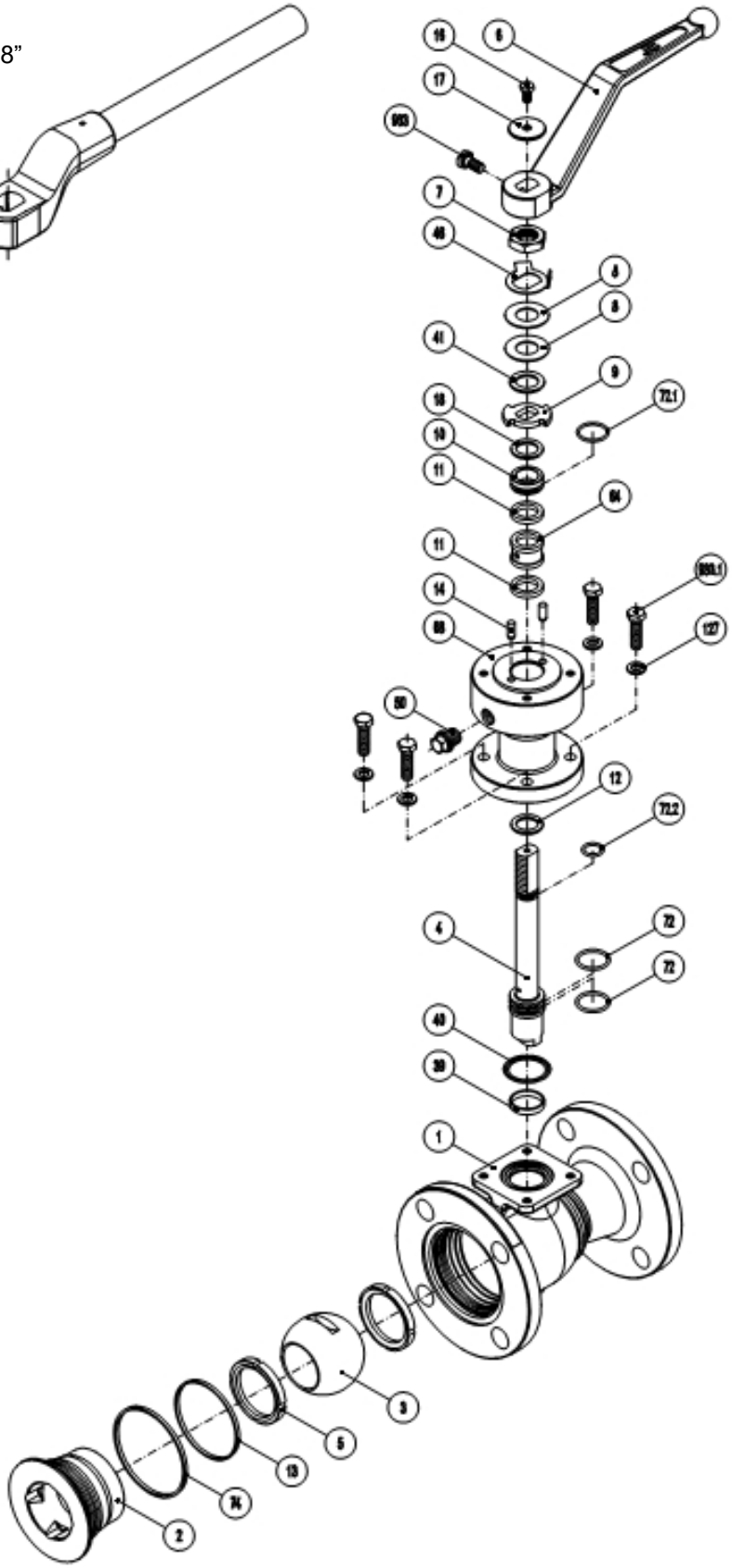

12.- LOW TEMPERATURE VALVE

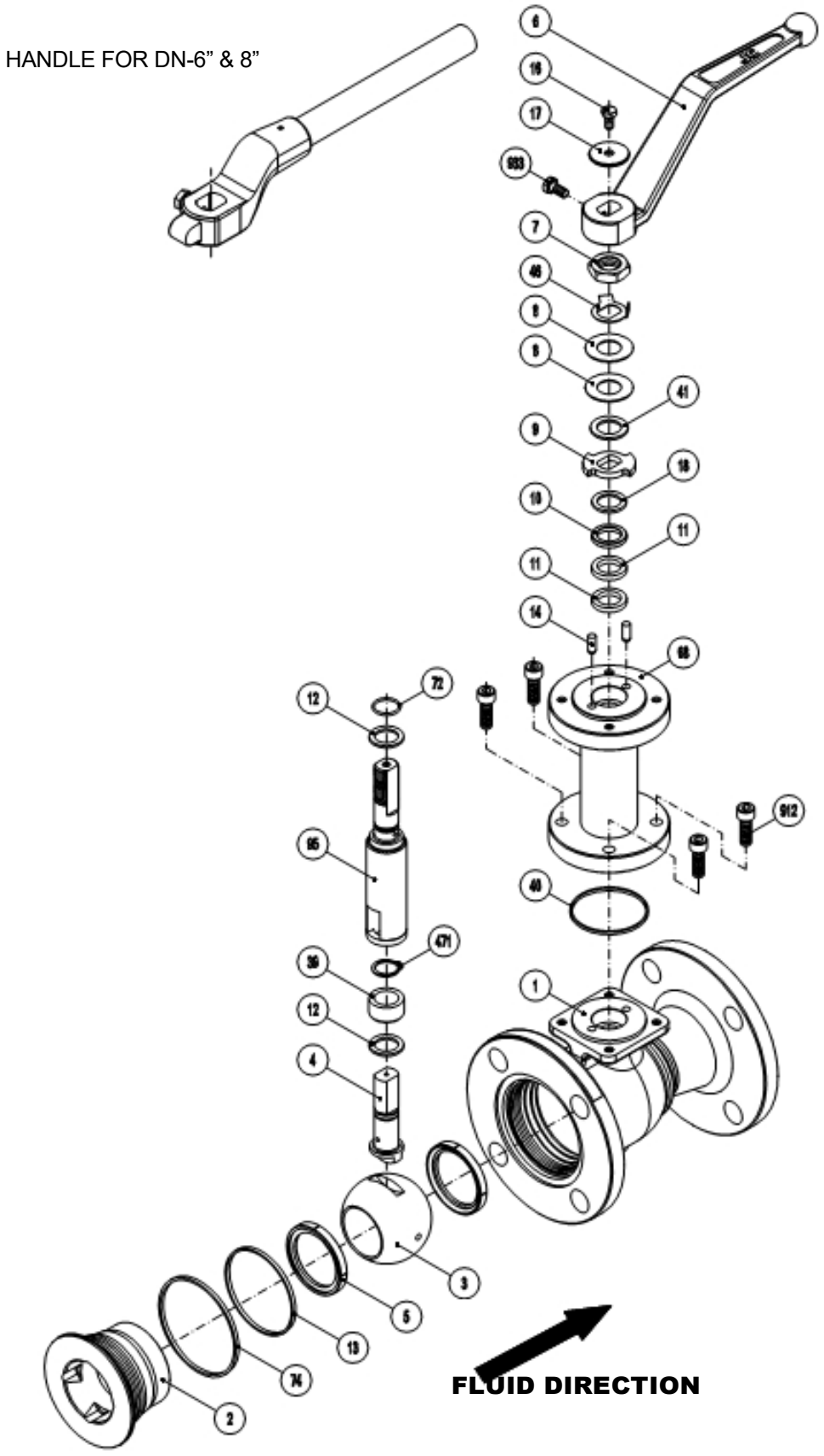

13.- AUTOMATED VALVE

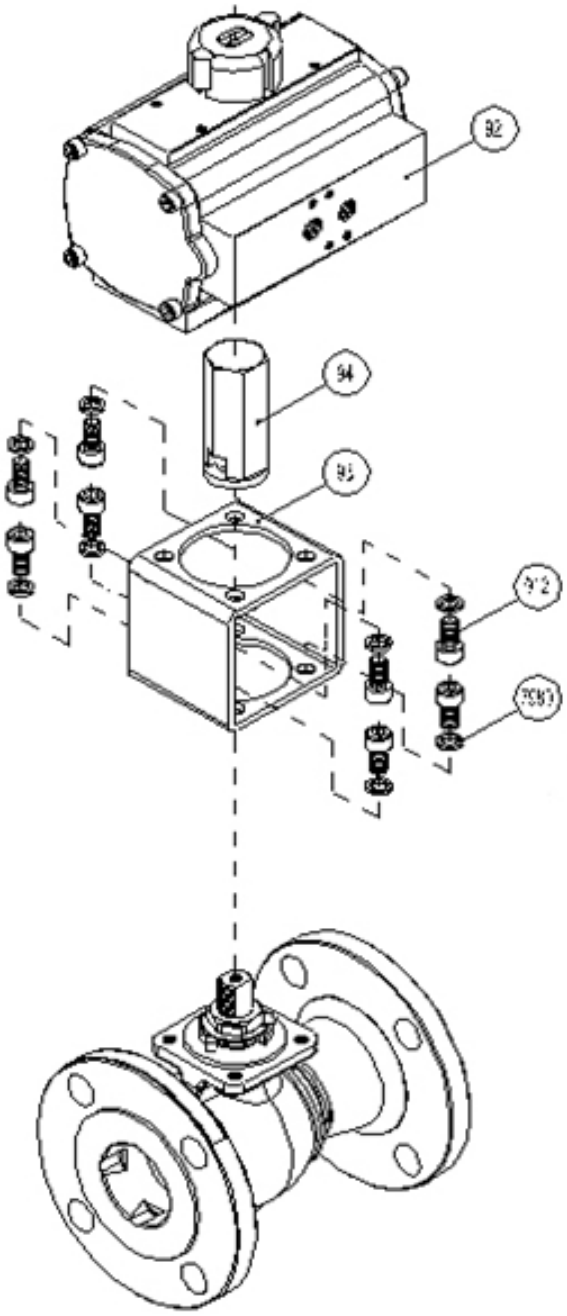

DETAIL VIEW OF COUPLING
FOR OPERATION

JC®
Fábrica de válvulas, s.a.

Cantàbria, 2. Pol. Ind. Les Salines
08830 Sant Boi de Llobregat
Barcelona (Spain)
Tel.: (+34) 936 54 86 86
Fax: (+34) 936 54 86 87
www.jc-valves.com
info@jc-valves.com

Operating Instructions

Original Operating Instructions

FSE 726 radiobus®

AO726G03

Table of Contents

Safety Instructions
- Intended Use
- Safety Instructions for Installation and Operation

Installation of the Radio Receiver
- Installation with Snap-In Wall Bracket
- Installation with integrated Mounting Loops
- Installation with Mounting Loops

Electrical Connection

Control Display

Technical Data

Dimensions
- Receiver Housing HR168
- Connection Options

Troubleshooting

Maintenance

Attachments: EC Declaration of conformity, return delivery note, frequency list, system specific views, circuit diagrams and /or output wiring

Pictographs

Danger due to electrical voltage. Touching live parts inside the unit can be fatal or cause serious injuries.

Instructions for occupational health and safety. Not following these instructions can cause accidents, which can cause damage, serious injuries or even death.

Important information about the operation of the radio system

Manufacturer:
HBC-radiomatic GmbH • Haller Straße 45 – 53 • 74564 Crailsheim • Germany • Tel. +49 7951 393 -0 • info@radiomatic.com. HBC.radiomatic GmbH is not liable for any misprints or errors! – Specifications and design subject to change without notice. ® *radiomatic* and *radiobus* are registered German trademarks.
© 01 / 2010, HBC-radiomatic GmbH, 74564 Crailsheim, Germany
No part of this document may be reproduced in any manner whatsoever without the expressed written permission of HBC-radiomatic GmbH.

Safety Instructions

Read through these operating instructions carefully before working with the radio system. This applies in particular to the installation, commissioning and maintenance of the radio system.
The operating instructions are a constituent part of the radio control system and must always be kept close at hand for the responsible personnel.
The term ‘machine’ is used in the operating instructions for the different possible uses of the radio system.

Intended Use

- The radio system serves to control machines and for data transfer. Observe the job safety and accident prevention regulations applicable to each application.
- The intended use also includes reading the operating instructions and adhering to all safety information contained therein.
- The radio system must not be used in areas where there is a risk of explosion, nor for the control of machines used to convey persons, unless it is explicitly approved by the manufacturer for these uses.

- Modifications to the radio system may only be carried out by specialist personnel who have been trained and authorized by HBC-radiomatic. All modifications must be documented at the factory in the radio control master file.
- The radio control system safety devices must not be modified, removed or bypassed. In particular, modifications to any part of the radio system's complete emergency-stop system are impermissible.

Safety Instructions for Installation and Operation

- The electrical connection per the accompanying output wiring diagram must be established by a qualified electrician exclusively.
- The receiver may only be opened by trained personnel. Components inside the receiver can be energized at life-threatening voltages. The supply voltage for the machine must be deactivated before the receiver is opened.

- Please also note with radio systems, that the presence of persons in the danger zone - in particular beneath the load (cranes!) - is prohibited in every instance.
- Select a safe location for radio control, from which you have a good and complete view of the working movements of the machine, the load movements and the surrounding working conditions.
- It is not permissible to put a radio transmitter unattended to one side whilst activated. Always switch the radio transmitter off when it is not required. This applies in particular if you change location, when working without radio control, during breaks and at the end of work. Always safeguard the radio transmitter against use by unauthorized persons, for example by locking it away.
- In the event of an emergency and with all faults, switch the radio transmitter off immediately by pressing the STOP switch.
- Only operate the radio system when it is in perfect working order. Faults and defects that could influence safety must be rectified before the system is put back into operation, by specialists who have been trained and authorized by HBC-radiomatic.
- Note that the operational directions of the operating elements may appear inverted depending on location and viewing angle to the machine. This applies in particular to rotary cranes, if your location changes from inside to outside the radius of the crane. The operator must make himself familiar with the directional markings on the machine before the start of work.
- Repairs may only be carried out by specialist personnel who have been trained and authorized by HBC-radiomatic. Use original replacement parts and accessories (e.g. rechargeable batteries) exclusively; otherwise it is possible that the equipment safety can no longer be guaranteed and our extended warranty will be voided.
- Remain vigilant when working with the radio system and familiarize yourself with its functions. This applies in particular if you are working with it for the first time or if you work with it only occasionally.

Installation of the Radio Receiver

- The receiver should be mounted vertically with the cable connection downwards.
- Ensure that there are no metal parts within a radius of 1 m (3 feet) above the receiver.
- When the receiver has to be mounted into a control cabinet, an offset antenna must be installed.
- Receivers with external antenna must be installed in such a way that the antenna stands freely and does not touch walls or metal parts. Otherwise an offset antenna must be used, which can be supplied if necessary.

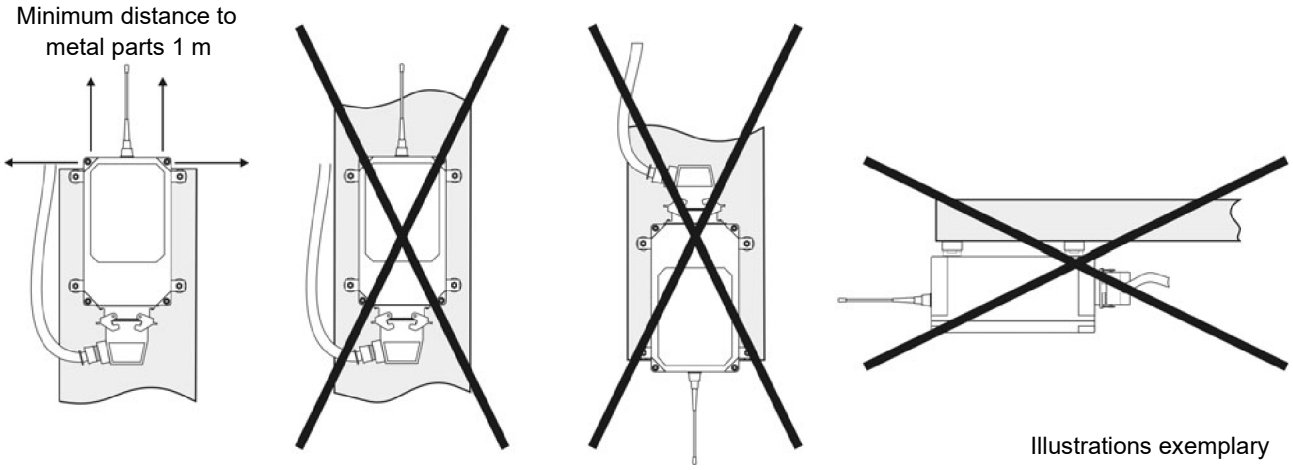

Illustrations exemplary

Installation with Snap-In Wall Bracket

The receiver is mounted with the snap-in wall bracket provided. Fix the wall bracket in place via the holes provided. Only use screws (max. M6) which are suitable for the installation location.

Receiver Housing HR145

(FSE 508, FSE 509)

Push the receiver with the mounting device 🕓 from the top into the wall bracket and press the receiver downwards until it clicks into place.

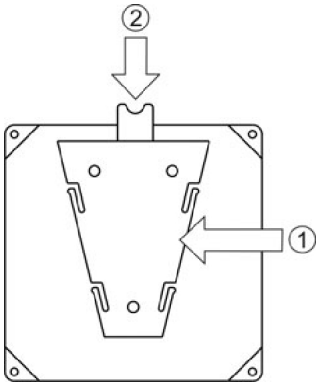

For removing the receiver, press the release device 🕓 downwards and pull the receiver upwards out of the wall bracket.

Receiver Housing HR165

(FSE 510, FSE 511, FSE 512)

Place the receiver with the eyelets on the wall bracket pins and press it on the wall bracket until it clicks into place.

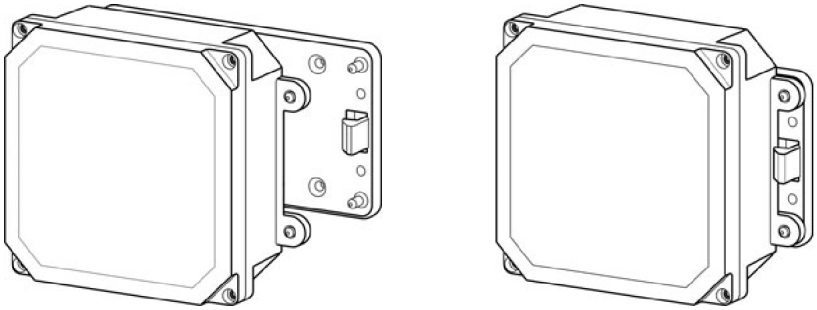

Press the engagement pins outwards with a large screwdriver, to remove the receiver from the wall bracket. This releases the receiver off the wall bracket from where it can be removed to the front.

Installation with integrated Mounting Loops

(FSE 516 with housing HR268, FSE 726/727 radiobus®)

The receiver is installed via the integrated mounting loops on the receiver sides. Use the shock mounts provided for installation to dampen any vibrations that may occur.

Installation with Mounting Loops

(FSE 516 with housing HR270 or HR272, FSE 524, FSE 736/737 radiobus®)

The receiver is installed via the provided mounting loops. Use the shock mounts provided for installation to dampen any vibrations that may occur. A detailed installation guide is enclosed with the delivery.

Electrical Connection

Depending on the version the radio receiver is connected either via a cable gland or with a Harting plug connection to the machine electrics.
Please observe that the receiver may only be connected to the supply voltage indicated on the type plate!

Warning – shock hazard!

- The electrical connection may only be carried out by skilled personnel.
- The electrical connection must comply with the enclosed wiring diagram.
- Switch off the supply voltage before opening the receiver. There is a risk of fatality from touching live parts inside the housing!

Control Display

The control display with LEDs indicating the operating state of the radio system is located behind the inspection window of the receiver cover lid.

The LEDs have the following significance:

On (yellow) illuminates as soon as operating voltage is present at the receiver, i.e. the connection to the electronic of the machine is established and operating voltage (12 V) is present.

RF (red) illuminates whenever the transmitter is switched off. It will be extinguished the very moment a signal is received by the receiver on its radio frequency.

Si 1 (green) illuminates after the transmitter is switched on, i.e. the receiver has identified its specific transmitter on the basis of the common message address (code). Safety circuit Si 1 is enabled.

Si 2 (green) refers to the internal safety circuit Si 2, responsible for a double switching off of the move commands whenever the control station is in the off (zero) position, i.e. "Si 2" will not illuminate.
It is not until one or several drive commands (e.g. turn, trolley traveling, lifting gear or crane traveling) are input that the "Si 2" LED may illuminate!

Available for FSE 510, FSE 511, FSE 516, FSE 524, FSE 726/727/736/737 radiobus®:
Feedback (yellow) illuminates whenever the receiver is sending a feedback telegram to the transmitter.

Technical Data

Max. number of control commands	20 digital (12 via change-over contacts) or 12 digital (8 via change-over contacts) + 6 analog
Supply voltage	42 – 240 V AC
Power consumption	max. 10 W
Digital inputs	depending on equipment with input modules
Analog inputs	depending on equipment with input modules
Serial interfaces	CANopen, Profibus-DP, RS485, RS232, DeviceNet
Connection possibilities	Harting Han 32 option: Harting Han 25 or Han 50 option: cable gland (metric M20/25)
EMS resp. Si1, Si2 control unit	1 x EMS output, 2 relays 4 A
RF interfaces	TC6XX
Frequency ranges	334 – 338 MHz, 400 – 475 MHz[1], 865 – 870 MHz, 902 – 928 MHz [1] Not all frequency ranges available.
Channel spacing	12,5 / 20 / 25 / 50 / 250 kHz
RX sensitivity	TC 641: −115 dBm / 10^{-2} BER TC 680/690: −95 dBm / 10^{-2} BER
Antenna	external, FL 30 or FL 70 option: offset antenna with 5 m cable and BNC connector
Unique system addresses	over 1.000.000 combinations
Operating temperature range	−25 °C – 70 °C (−13 °F – 158 °F)
Housing material	plastic
Dimensions	165 x 165 x 115 mm (6.5 x 6.5 x 4.5 ")
Weight	ca. 2,6 kg (5.7 lb.)
Protection class	IP 65
EMS category	4 according to EN 954-1 (The EMS category of the radio control system depends on the respective transmitter)

Dimensions

Receiver Housing HR168

(FSE 726/727 radiobus®)

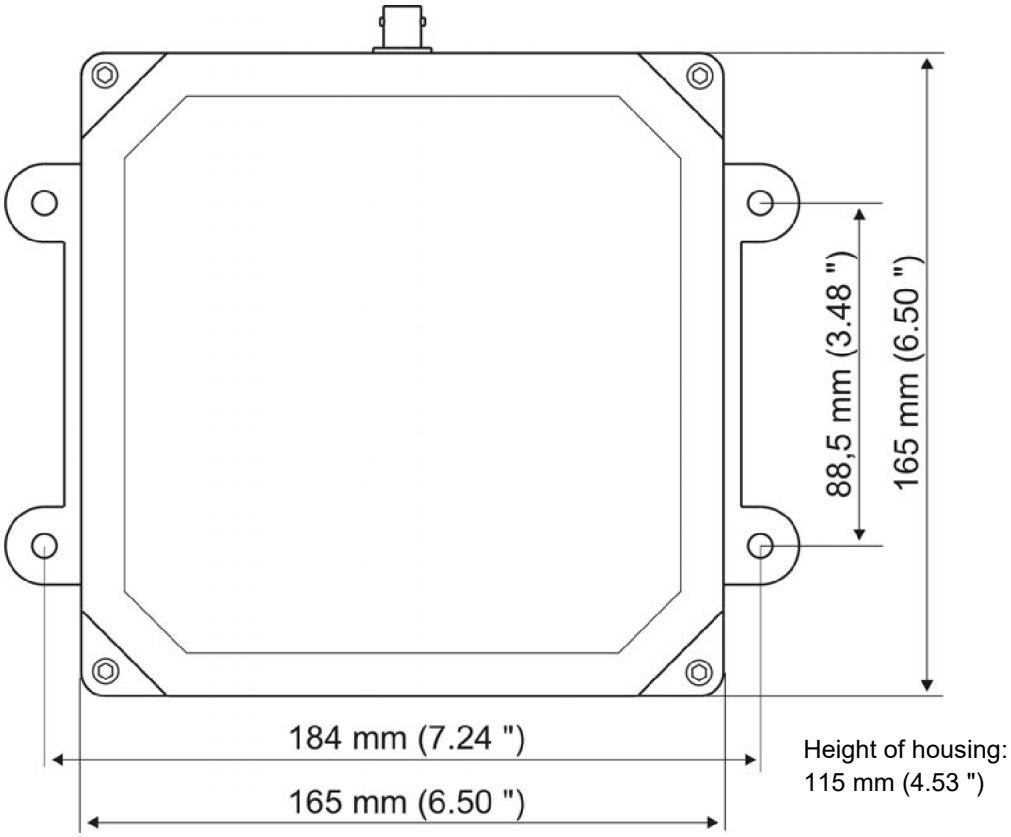

Illustration exemplary

Connection Options

Harting Plug Connections

FSE 510, FSE 511, FSE 512

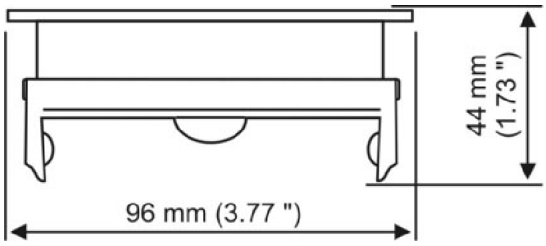

FSE 516, FSE 524, FSE 726/727/736/737 radiobus®

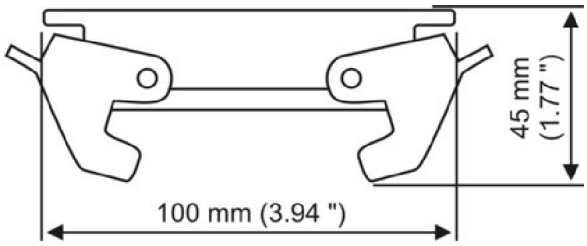

Metric Cable Glands

FSE 510, FSE 511, FSE 512

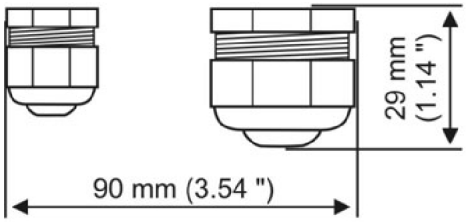

FSE 516, FSE 524, FSE 726/727/736/737 radiobus®

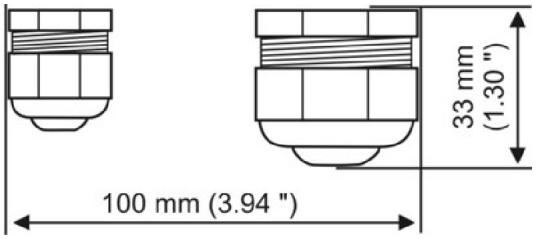

PG Cable Gland

FSE 508, FSE 509

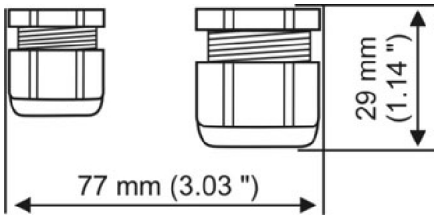

Troubleshooting

Note:
Please check the functions using the cabin or cable controls first!

Problem	Possible Cause	Measures
Transmitter does not react when switched on.	– No power.	– Check battery contacts for damage or contamination. – Insert a fully charged battery into the battery compartment. – Recharge battery.
Low-power indication after minimal operating time.	– Battery contacts are contaminated or damaged. – Battery not charged. – Battery defective.	– Check battery contacts for damage or contamination. – Recharge battery. – Ensure that recharging process runs correctly. – Check transmitter functions using a fully charged or replacement battery.
Some commands are not carried out.	– Receiver defective. – Interruption in the connecting cable to the crane or machine.	– Check if all connecting cables and cable junctions are tight.

If none of the measures mentioned resolve the problem, then please contact your service technician, dealer or HBC-radiomatic GmbH.

Maintenance

The radio control system is virtually maintenance-free. Please observe the following points:

- Never use a high pressure cleaner or sharp or pointed objects to clean the receiver.
- Whenever welding the machine:
  - Switch off the radio control system.
  - Switch off the machine.
  - Disconnect all electrical connections to the receiver.

  Otherwise the receiver electronics can be destroyed.

In the Event of a Fault

Warning:
Never operate a machine with a faulty or defective radio control system!

- Never try to repair the electronics of the radio control system! Opening the transmitter or receiver housing terminates the manufacturer guarantee.
  - Send any defective or faulty equipment to your local distributor or to the manufacturer. They are experts and have the necessary know-how and OEM spare parts.
  - Always send both transmitter and receiver and enclose a detailed description of the problem.
  - Do not forget to enclose your address and telephone number so that we can get in touch with you quickly if necessary.
- To avoid damage during transport, use the original packing supplied with the radio control system, otherwise pack securely. Send the consignment to your distributor or to the following address:

  HBC-radiomatic GmbH
  Haller Str. 45 – 53
  74564 Crailsheim, Germany
  Phone: +49 7951 393- 0 Fax:
  +49 7951 393-50 E-Mail:
  info@radiomatic.com
- Should you choose to deliver a defective radio control system personally to your distributor or our factory, please call and arrange an appointment.

Frequency List for Europe (10/2007)

f -liste-en-2007-v1 [PMSK/DOKUS]

	433,050 MHz–434,790 MHz 100 % duty cycle according to ERC 70-03	434,040 MHz–434,790 MHz 100 % duty cycle according to ERC 70-03
Austria		X
Belgium		X
Bosnia and Herzegovina		X
Bulgaria		X
Croatia		1)
Cyprus		X
Czech Republic		X
Denmark		X
Estonia		X
Finland		X
France	X	X
Germany	X	X
Greece		
Hungary		1)
Iceland		X
Ireland		X
Italy		X
Latvia		X
Liechtenstein		X
Lithuania		X
Luxembourg		X
Macedonia		X
Malta		X
Montenegro		X
Norway		X
Poland		X
Portugal		X
Romania		
Serbia		X
Slovakia		X
Slovenia		X
Spain		X
Sweden	X	X
Switzerland		X
The Netherlands	X	X
Turkey		X
United Kingdom	X	X

1) with restrictions

CE① **Important note:**
Equipment with marking may only be placed on the market in countries marked with **X**. Please observe the frequency indicated on the name plate of the equipment.

CE **Important note:**
Equipment with marking may be placed on the market in all EU member states (e.g. frequency band 869,700 – 870,000 MHz).
Please observe the frequency indicated on the name plate of the equipment.
Additional national frequencies available on request.

Copying of this document, and giving it to others and the use or communication of the contents thereof are forbidden without express authority. Offenders are liable to the payment of damages. All rights are reserved in the event of the grant of a patent or the registration of a utility model or design.

Form	Return Delivery Note	

HBC-radiomatic GmbH
Haller Str. 45 – 53

74564 Crailsheim, Germany

Transaction No. (provided by HBC): .....

Phone: + 49 (0)7951 393 800
Fax: + 49 (0)7951 393 802
Email: service@radiomatic.com
Internet: www.hbc-radiomatic.com

Contact for further information:

Contact person: ..... …….. Phone: ..... Fax: ……

..... Email: ……

Reason for return *):

Repair ☐
Modification ☐
Wrong order ☐
Wrong delivery ☐
For credit ☐

Estimate required? yes ☐ no ☐

customer's order no.: .....

corresponding invoice no.: ..... …….

*) in order to work on your return rapidly, please state precisely the fault report and invoice no.

HBC Fabr. No.: .....

Transmitter: .....

Receiver: .....

Charger: .....

Batteries: .....

Cable: .....

Other accessories: .....

PCB ..... from system

Fabr. No.: .....
.....
.....
.....

Description of problem:

.....
.....
.....
.....
.....
.....

Absolutely necessary information::

Problem appears:
due to vibration / shock ☐
if warm or hot ☐
if cold ☐
sometimes ☐ commonness: ……..
always ☐
never ☐ (in good order, not needed pcb)

Note:

For system repairs, please send (if possible) the complete system including transmitter, receiver, batteries, charger and cable with detailed description of the problem.

The return is subject to the conditions described in paragraph 8 (Guarantee) in our standard terms & conditions.

Returns will only be accepted **CIF Crailsheim, Germany**. Preferred shipping via **DPD** and **UPS Standard**.
Please use the original HBC packaging if possible. Please use proper packaging to avoid electrostatic discharge hazards with pcbs and/or modules. Warranty claims may not be accepted in case of improper packaging.
Returns shipped ex works or unpaid will not be accepted without express written consent by HBC.

Weitergabe sowie Vervielfältigung dieser Unterlage, Verwertung und Mitteilung ihres Inhalts sind nicht gestattet, soweit nicht ausdrücklich zugestanden. Zuwiderhandlungen verpflichten zu Schadensersatz. Alle Rechte für den Fall der Patenterteilung oder GM-Eintragung vorbehalten.

Copying this document, and giving it to others and the use or communication of the contents thereof are forbidden without express authority. Offenders are liable to the payment of damages. All rights are reserved in the event of the grant of a patent or the registration of a utility model or design.

Formblatt	Rücklieferschein	

HBC-radiomatic GmbH
Haller Str. 45 – 53

74564 Crailsheim

Vorgangs-Nr. (von HBC vergeben)

.....

Tel.: + 49 (0)7951 393 800
Fax: + 49 (0)7951 393 802
E-Mail: service@radiomatic.com
Internet: www.hbc-radiomatic.com

Kontakt bei Rückfragen

Ansprechpartner: ..... …….. Telefon: ..... Fax: ……

..... Email: ……

Grund der Rücklieferung *):

Reparatur ☐
Umbau ☐
Falschbestellung ☐
Falschlieferung ☐
zur Gutschrift ☐

Kostenvoranschlag gewünscht? ja ☐ nein ☐

zu Bestell-Nr.: ……

zu Rechnungs-Nr.: .....

*) Um Ihre Rücklieferung rasch bearbeiten zu können, geben Sie bitte die Fehlerbeschreibung sowie die Rechnungs-Nr. der Ware an.

HBC Fabr. Nr.: .....

Sender: .....

Empfänger: .....

Ladegerät: .....

Akkus: .....

Anschlusskabel: .....

Sonstiges Zubehör: .....

Platine..... aus System

mit Fabr. Nr.: .....

Fehlerbeschreibung:

.....

.....

.....

.....

.....

.....

unbedingt auszufüllen::

Mangel tritt auf:
bei Erschütterung ☐
bei Wärme ☐
bei Kälte ☐
manchmal ☐ Häufigkeit: .....
immer ☐
nie ☐ (intakte, nicht benötigte Platine)

Hinweis:

Bitte senden Sie bei System-Reparaturen möglichst das komplette System zurück - inkl. Sender, Empfänger, Akkus, Ladege-rät und eventuell Anschlusskabel mit einer detaillierten Fehlerbeschreibung.

Die Rücksendung erfolgt unter Beachtung der in Ziffer 8 (Gewährleistung) unserer Allgemeinen Geschäftsbedingungen enthaltenen Bestimmungen.

Bitte liefern Sie die Ware **frei Haus** an uns zurück! Bevorzugte Speditionen: **DPD** und **UPS Standard**. Verwenden Sie möglichst die original HBC Umverpackung für die Rücklieferung. Für elektronische Bauteile und/oder Platinen ist eine ESD-Schutz-Verpackung zu verwenden. Garantieansprüche können bei Fehlen der ESD-Schutz-Verpackung erlöschen.
Anlieferungen „unfrei“ ohne vorherige schriftliche Freigabe durch HBC werden nicht akzeptiert.

Weitergabe sowie Vervielfältigung dieser Unterlage, verwertung und Mitteilung ihres Inhalts sind nicht ausdrücklich zugestanden. Zuwiderhandlungen verpflichten zu Schadensersatz. Alle Rechte für den Fall der Patentierung oder GM-Eintragung vorbehalten.

EC Declaration of Conformity

in accordance with EC Machinery Directive 2006/42/EC, Annex II,
and in accordance with R&TTE Directive 1999/5/EC, Annex III

The manufacturer:

HBC-radiomatic GmbH
Haller Straße 45 – 53 • 74564 Crailsheim • Germany

hereby declares that the following product:

CE

Receiver **FSE 726 radiobus®**

safety component according to the Machinery Directive (2006/42/EC), conforms to

all applicable provisions of the Machinery Directive (2006/42/EC).

The identified product also conforms to all provisions of the following European Directives:

2006/95/EC	Low Voltage Directive
2004/108/EC	Electromagnetic Compatibility
1999/5/EC	R&TTE Directive (Radio & Telecommunications Terminal Equipment)

The following harmonized standards were applied:

EN ISO 13849-1:2008.....	Safety of machinery - Safety-related parts of control systems
.....	Part 1: General principles for design
EN 60204-1:2006	Safety of machinery - Electrical equipment of machines
.....	Part 1: General requirements
EN 60950-1:2006	Information technology equipment - Safety
.....	Part 1: General requirements
EN 301 489-1:2008-04 V1.8.1	Electromagnetic compatibility and Radio spectrum Matters (ERM)
.....	Part 1: Common technical requirements
EN 301 489-3:2002-08 V1.4.1	Electromagnetic compatibility and Radio spectrum Matters (ERM)
.....	Part 3: Specific conditions for Short-Range Devices (SRD)
EN 300 220-2:2007-06 V2.1.2	Electromagnetic compatibility and Radio spectrum Matters (ERM)
.....	Part 2: Harmonized EN covering essential requirements under article 3.2
.....	of the R&TTE Directive

The following national regulations were applied:

ZH 1/547:1976	Guidelines for radio control units of cranes
BGR 149:1995	Rules for the safety of equipment for wireless transmission of
.....	control commands

Quality management system according to DIN EN ISO 9001:2008 by: LGA InterCert GmbH
Tillystr. 2
90431 Nürnberg, Germany

Person responsible for documentation: Martin Schuster

Note: The commissioning of the machine in which this product was incorporated, is prohibited until it has been determined that the machine conforms to the provisions of the Directive 2006/42/EC

Place and date:

Valid signature:

Name: Wolfgang Brendel

(Managing Director)

Operating Instructions

Original Operating Instructions

spectrum EEX

AOSP2GE0

Table of Contents

Safety Instructions
- Intended Use
- Safety Instructions for Installation and Operation

Operation
- Activating the Transmitter
- Deactivating the Transmitter

Battery and Battery Charger
- Battery
- Battery Charger

Options
- Safety Features
- Frequency Selection
- Catch-Release
- Tandem Operation
- Catch-Release-Tandem Operation
- radiomatic® infrakey
- Cable Control
- radiomatic® masterkey
- Address Changeover via Coding Plug
- Transmitter Key up
- Utilization of Button ⏻ as Shift Key
- Enabling of the Proportional Outputs
- Rotary Switch for Preselected Speed
- Slewing Gear Release
- Feedback by LED
- Pre-selection of Trolley or Hoist

Technical Data

Dimensions

Troubleshooting

Maintenance

EC Type Examination Certificates

Attachments: EC Declaration of conformity, return delivery note, frequency list, system specific views, circuit diagrams and /or output wiring

Pictographs

Danger due to electrical voltage. Touching live parts inside the unit can be fatal or cause serious injuries.

Instructions for occupational health and safety. Not following these instructions can cause accidents, which can cause damage, serious injuries or even death.

Important information about the operation of the radio system

Manufacturer:
HBC-radiomatic GmbH • Haller Straße 45 – 53 • 74564 Crailsheim • Germany • Tel. +49 7951 393-0 • info@radiomatic.com. HBC.radiomatic GmbH is not liable for any misprints or errors! – Specifications and design subject to change without notice.
® *radiomatic* and *radiobus* are registered German trademarks.
© 04 / 2010, HBC-radiomatic GmbH, 74564 Crailsheim, Germany
No part of this document may be reproduced in any manner whatsoever without the expressed written permission of HBC-radiomatic GmbH.

Safety Instructions

Read through these operating instructions carefully before working with the radio system. This applies in particular to the installation, commissioning and maintenance of the radio system.
The operating instructions are a constituent part of the radio control system and must always be kept close at hand for the responsible personnel.
The term ‘machine’ is used in the operating instructions for the different possible uses of the radio system.

Intended Use

- The radio system serves to control machines and for data transfer. Observe the job safety and accident prevention regulations applicable to each application.
- The intended use also includes reading the operating instructions and adhering to all safety information contained therein.
- The radio system must not be used for the control of machines used to convey persons, unless it is explicitly approved by the manufacturer for this use.
- Modifications to the radio system may only be carried out by specialist personnel who have been trained and authorized by HBC-radiomatic. All modifications must be documented at the factory in the radio control master file.
- The radio control system safety devices must not be modified, removed or bypassed. In particular, modifications to any part of the radio system's complete emergency-stop system are impermissible.

Safety Instructions for Installation and Operation

- The electrical connection per the accompanying output wiring diagram must be established by a qualified electrician exclusively.
- The receiver may only be opened by trained personnel. Components inside the receiver can be energized at life-threatening voltages. The supply voltage for the machine must be deactivated before the receiver is opened.
- Please also note with radio systems, that the presence of persons in the danger zone - in particular beneath the load (cranes!) - is prohibited in every instance.
- Select a safe location for radio control, from which you have a good and complete view of the working movements of the machine, the load movements and the surrounding working conditions.
- It is not permissible to put a radio transmitter unattended to one side whilst activated. Always switch the radio transmitter off when it is not required. This applies in particular if you change location, when working without radio control, during breaks and at the end of work. Always safeguard the radio transmitter against use by unauthorized persons, for example by locking it away.
- In the event of an emergency and with all faults, switch the radio transmitter off immediately by pressing the STOP switch.
- Only operate the radio system when it is in perfect working order. Faults and defects that could influence safety must be rectified before the system is put back into operation, by specialists who have been trained and authorized by HBC-radiomatic.
- Note that the operational directions of the operating elements may appear inverted depending on location and viewing angle to the machine. This applies in particular to rotary cranes, if your location changes from inside to outside the radius of the crane. The operator must make himself familiar with the directional markings on the machine before the start of work.
- Repairs may only be carried out by specialist personnel who have been trained and authorized by HBC-radiomatic. Use original replacement parts and accessories (e.g. rechargeable batteries) exclusively; otherwise it is possible that the equipment safety can no longer be guaranteed and our extended warranty will be voided.
- Remain vigilant when working with the radio system and familiarize yourself with its functions. This applies in particular if you are working with it for the first time or if you work with it only occasionally.
- Check each time before starting work the function of the STOP switch.
  When you press the STOP switch with the transmitter on, the status LED of the transmitter has to go out. If the status LED does not go out then you have to disable the radio control system immediately. Remove the battery and the radiomatic® iON from the transmitter and inform a service technician.

Special Instructions for Use in Hazardous Areas

General Instructions

- All warning notices on the transmitter and receiver must be observed.
- The warning notices may not be removed.
- Warning notices that have become damaged or illegible must be replaced.
- The designation of transmitter and receiver is to be noted (see type plate).
- In the event of damage to the transmitter or receiver casing, which impairs the class of casing protection, the radio installation is to be taken out of operation and arrangements made for repair by the manufacturer.
- Never use a damaged connecting cable (see cable control option).

The following must be observed for installation and operation:

- National installation and erection regulations are applicable (for example EN 60079-14).
- National safety and accident prevention regulations.
- Generally accepted rules of engineering.
- The safety notes in this operation manual.
- Damages may cancel the effectiveness of explosion protection.
- When using cable control option the stationary radio receiver must be installed outside hazardous areas respectively in a standardized type of protection in accordance with EN 60079-0.

Instructions Specific to the Receiver

- An option to disconnect the receiver electrically must be provided outside the hazardous area.
- The plug connection on the receiver may only be disconnected when it is in a zero voltage state.
- All current paths of the switching relay of the receiver must be fused up to the maximum current switching capability of the relay contacts.
- The installer must ensure that the operating voltage range prescribed by the manufacturer is maintained.
- If the antenna is installed within the hazardous area, it may only be moistened when cleaning and high-energy particle flows must be avoided.

Instructions Specific to the Transmitter

- The transmitter spectrum EEX may only be operated with the FuB 06 EEX battery or with the respective connecting cable when using cable control option!
- The battery contacts must be maintained clean.
- The transmitter must be switched off if the battery is changed in hazardous areas.
- The battery may not be charged in hazardous areas.
- The battery charger may not be operated in hazardous areas.

Operation

The transmitter is equipped with an electronic radiomatic® iON key. radiomatic® iON contains all the data required for operating the transmitter. Operation is not possible without radiomatic® iON!
Depending on the version the radiomatic® iON can also be used for operation of replacement transmitters of identical construction.

In the event of an interruption of the radio link during a working cycle – what can occasionally happen – both transmitter and receiver automatically shut down (so-called "compulsory switch-off").
To reactivate the system release all operator controls and allow the control elements to return to their zero position. After that the machine can react again to control commands. This feature hinders any uncontrolled or unwanted machine movement, should the radio link be interrupted.

Note:
If the machine is equipped with a main contactor you must actuate the start button before the machine can react again to control commands.

Activating the Transmitter

1. Insert a charged battery into the battery compartment.
2. Turn the STOP switch to unlock.
3. Actuate the start button.
   When the status LED flashes green, the transmitter is ready to operate.

Caution:
Before starting work always trigger the acoustic signal. This warns all colleagues that the machine is about to move.

Deactivating the Transmitter

Press the STOP switch.

Note:
Replace the battery when the status LED in the transmitter flashes red and an acoustic signal sounds. Otherwise, the transmitter will switch off in a few minutes.
Recharge the empty battery in the respective charger.

Battery and Battery Charger

Battery

The battery capacity depends on the age of the battery and the ambient temperature. Older batteries lose their capacity over time. The battery capacity diminishes more quickly at temperatures below 0 °C (32 °F) and above 40 °C (104 °F).

Please note that the battery

- must be charged before initial use.
- only reaches its full capacity after approx. 5 charging cycles.
- must be charged at an ambient temperature of 0 – 40 °C (32 – 104 °F) in order to reach full capacity.

When handled properly the battery can exceed 500 charging cycles:

- Recharge the battery only when the status LED on the transmitter flashes red and the acoustic signal sounds.
- Always store rechargeable batteries at room temperature.
- Protect the battery from short circuits and always store it in the protective cover provided.
- Charge the battery fully before storing it for a prolonged period. Otherwise total discharge max occur.

Battery Charger

An AC or DC charger is available for the HBC batteries, depending on customer selection.

Ensure that you observe the following instructions:

- Use this charger only to charge the HBC batteries specified on the type plate.
- The charger **may not be used in hazardous areas.**
- The charger has to be operated with the voltage indicated on the back.
- The charger has to be used in vehicles or indoors only.
- Use the charger only within the specified temperature range.
- Protect the charger against heat, dust and humidity.
- Do not cover the charger while it is in use.
- Disconnect the charger from the power supply when it is not in use.
- In case of any fault of the charger or the connecting cable disconnect it immediately and put it out of operation.
- Do not make technical changes to the charger or the connecting cable.
- Defects must be repaired by qualified personnel only.

Three LEDs indicate the actual operating state of the battery.

LED **green**: Illuminates when battery is charged.
LED **orange**: Illuminates when battery is charging.
LED **red**: Illuminates when battery is deep discharged or defective.

Note:
If a deep discharged battery is inserted into the charger, the red LED will illuminate for some time before charging is started (LED orange illuminates).

QE111300 / QE111400 / QE111500

The charger is supplied with a connecting cable with a matching power plug.

Charging the battery:

1. Connect the charger via the connecting cable to the power supply.
2. Insert the battery into the compartment.

Charging will start automatically.

Technical Data	
Operating voltage	10 – 30 V DC (QE111300) 115 V AC (QE111400) 230 V AC (QE111500)
Charging time	approx. 3 hours
Operating temperature	10 – 40 °C
Housing material	Plastic
Protection class	II

„Discharge“ function

Battery capacity can decrease over time. The charger offers a discharge function for improving the available battery capacity. Press the "Discharge" button to activate this function. The battery will be completely discharged and automatically recharged.

Options

The availability of the following functions depends on the design and configuration of your radio control system.

Safety Features

The safety features enable a quick shut-down of the radio control in specific emergency situations. Therefore, these intelligent functions prevent a dangerous unintended command from being given to the crane or machine.

radiomatic® **shock-off** can trigger a quick automatic shut-down of the radio control in case of an impact to the transmitter – e. g. if the transmitter is being hit by a massive object thereby getting out of control.

radiomatic® **roll-detect** can automatically detect rolling of the transmitter and, in this case, initiate a quick shut-down of the radio control.

radiomatic® **zero-g** can automatically detect if the transmitter is dropped or being thrown to another user. In such cases, zero-g can trigger a quick automatic shut- down of the transmitter.

inclination switch can deactivate the transmitter, if it exceeds an inclination angle of approx. 130° – 170° for a certain time and/or if it is placed front side down.

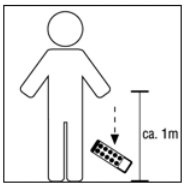

When the transmitter was shut down with radiomatic® shock-off/roll-detect/zero-g or inclination switch, the start button has to be activated until the status LED flashes green. Then the transmitter is ready to operate again.

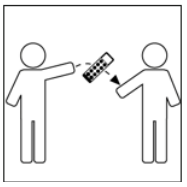

The safety features do not relieve the operator of his responsibility to turn off the transmitter with the STOP switch when not in use.

Frequency Selection

Fixed Frequency

If the identification plate in the battery compartment of the transmitter shows a frequency value (e.g. 433,500 MHz), the transmitter operates with a fixed frequency.
Please contact you service department if the frequency has to be changed because the frequency channel is already assigned to another operator.

Frequency Selection via Scanner

Transmitter and receiver are equipped with four frequencies (refer to wiring diagrams).
If the frequency channel is occupied, you can switch to another frequency channel by using the rotary switch on the transmitter. The scanner in the receiver automatically resets the transmitter to the new frequency selected within one second.

Manual Frequency Switching

If the identification plate in the battery compartment of the transmitter shows the label **man**, the transmitter features manual frequency switching.
This function can be used to change the frequency channel during radio operation.
Actuate the start button until an acoustic signal sounds. Then release the button.
Please contact your service department if all available frequencies are occupied.

radiomatic® AFS

If the identification plate in the battery compartment of the transmitter shows the label **AFS**, the transmitter is equipped with radiomatic® AFS (Automatic Frequency Selection).
When activating the transmitter radiomatic® AFS will check if the present frequency channel is free. If the frequency channel is occupied, the system automatically finds and saves a free frequency channel.
If the frequency channel currently in use is occupied by another radio control system, you must switch the transmitter off and on again in order to allow radiomatic® AFS to switch to a free frequency channel.
The radiomatic® AFS option also includes the manual frequency switching function.

Note:

If radiomatic® AFS is to perform optimally, all the other radio systems in the immediate working environment (e.g. the factory hall or building site) should be switched on before starting to use the radio system for the first time. This allows radiomatic® AFS to detect automatically which radio channels are already being used in the working area, and thereby to choose a suitable free channel for its own use.

In addition, when switching the radio system on for the first time, the user should make sure that his distance from the radio receiver and from the machine is a realistic reflection of the working situation.

radiomatic® AFM

If the identification plate in the battery compartment of the transmitter shows the label **AFM** the transmitter is equipped with radiomatic® AFM (Automatic Frequency Management).
radiomatic® AFM detects available frequency channels constantly. If the frequency channel currently in use is occupied by another radio control system, radiomatic® AFM switches automatically to a free frequency channel.

Catch-Release

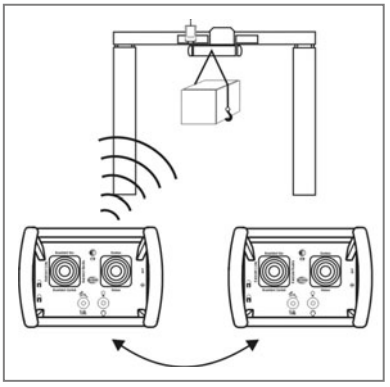

Via the Catch-Release option two or more transmitters can control a machine alternately.
When the receiver is switched on, the machine can initially be controlled via any associated transmitter. Once the receiver was taken over by one transmitter, the other transmitters no longer have access.

Take over machine

1. Switch the transmitter on.
2. Enter the "Catch" command on the transmitter and actuate the start button.

The access rights for the machine remain with that transmitter until the "Release" command is issued by that transmitter.

Release machine

1. Enter the "Release" command on the transmitter.
2. Switch the transmitter off.

The access rights for the machine are cancelled. Machine control can be taken over by another transmitter.

Operating Example:

Transmitter 1 has taken over the machine. Transmitter 2 is to be given control.

1. Enter the "Release" command on transmitter 1.
2. Switch transmitter 1 off.
3. Switch transmitter 2 on.
4. Enter the "Catch" command on transmitter 2 and actuate the start button.

Transmitter 2 now has sole access to all machine functions.

Notes:

- If a receiver has already been adopted by a transmitter can be displayed via a lamp on the machine.
- If the operating voltage of the receiver fails, the receiver returns to the starting condition in which it can be adopted by any transmitter. If necessary, the receiver must be adopted anew.
- If the transmitter is deactivated without the command "Release" having been issued, the other transmitters have no access to the receiver. The starting condition described above can only be resumed by deactivating the operating voltage at the receiver.

Tandem Operation

Tandem Operation T1

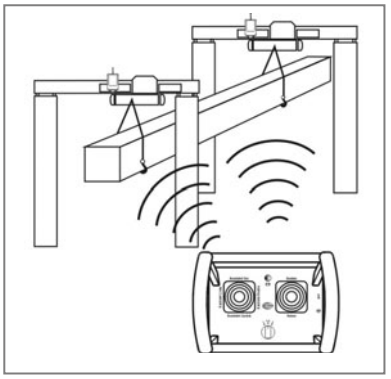

The radio system consists of 1 transmitter and 2 receivers for 2 machines. The transmitter can control the machines individually or in parallel

The machines are selected at the transmitter via a rotary switch:
A only machine A
A+B machine A + machine B
B only machine B

Tandem Operation T2

The radio system consists of 2 transmitters and 2 receivers for 2 machines. Both transmitters are master transmitters and can control the machines individually or in parallel.
During normal operation transmitter 1 controls machine A and transmitter 2 controls machine B. In order to be able to switch to machine B or A+B at transmitter 1, for example, the key must be removed from transmitter 2 and inserted in transmitter 1.

The machines are selected at the transmitter via a rotary switch:
A only machine A
A+B machine A + machine B
B only machine B

Operating Example: Control of machine A + B via transmitter 1.
1. Switch transmitter 1 and 2 off and remove the key from transmitter 2.
2. Insert the key from transmitter 2 in transmitter 1.
   Machine selection via transmitter 1 is activated.
3. Turn the rotary switch of transmitter 1 to A+B.
4. Switch transmitter 1 on and actuate the start button.

The radio system now operates in tandem mode.

Tandem Operation TM/TS

The radio system consists of 2 transmitters and 2 receivers for 2 machines. One transmitter is a master transmitter and can control the machines individually or in parallel. The other transmitter is a slave transmitter and can only control machine B.
In order to be able to switch to machine B or A+B at the master transmitter, the key must be removed from the slave transmitter and inserted in the master transmitter.

The machines are selected at the transmitter via a rotary switch:
A only machine A
A+B machine A + machine B
B only machine B

Operating Example: Control of machine A + B via master transmitter.
1. Switch master and slave transmitter off and remove the key from slave transmitter.
2. Insert the key from slave transmitter in master transmitter.
   Machine selection via master transmitter is activated.
3. Turn the rotary switch of master transmitter to A+B.
4. Switch master transmitter on and actuate the start button.

The radio system now operates in tandem mode.

Catch-Release-Tandem Operation

With the Catch-Release-Tandem Operation two or more transmitters can control several machines alternately.
Each machine is equipped with a receiver that can receiver and monitor all transmitter frequencies.
After activating the receivers all transmitters have equal access to the radio control system.

Take over machine

1. Switch the transmitter on.
2. Turn rotary switch on the transmitter to the respective position.
3. Enter the "Catch" command on the transmitter and actuate the start button.

The transmitter with control over the machine(s) retains the access to the receiver until the operator has issued the "Release" command.

Release machine

1. Enter the "Release" command on the transmitter.
2. Switch the transmitter off.

The access rights for the machine(s) are cancelled. Machine control can be taken over by another transmitter.

Operating Example:

Transmitter 1 has taken over machine A. Transmitter 2 is to be given control over machine A+B.

1. Enter the "Release" command on transmitter 1.
2. Switch transmitter 1 off.
3. Switch transmitter 2 on.
4. Turn rotary switch on transmitter 2 to A+B.
5. Enter the "Catch" command on transmitter 2 and actuate the start button.

Transmitter 2 now has sole access to all machine functions.

Notes:

- If a receiver has already been adopted by a transmitter can be displayed via a lamp on the machine.
- If the operating voltage of the receiver fails, the receiver returns to the starting condition in which it can be adopted by any transmitter. If necessary, the receiver must be adopted anew.
- If the transmitter is deactivated without the command "Release" having been issued, the other transmitters have no access to the receiver. The starting condition described above can only be resumed by deactivating the operating voltage at the receiver.

radiomatic® infrakey

The radio system can only be activated via an infrared link between the transmitter and the receiver. This increases the safety of operation, i.e. the machine can not become inadvertently enabled.

radiomatic® infrakey operates either with an infrared module in the receiver housing (radiomatic® infrakey internal) or with the offset infrared antenna focus I (radiomatic® infrakey external).

To activate radiomatic® infrakey, actuate the start button on the transmitter.

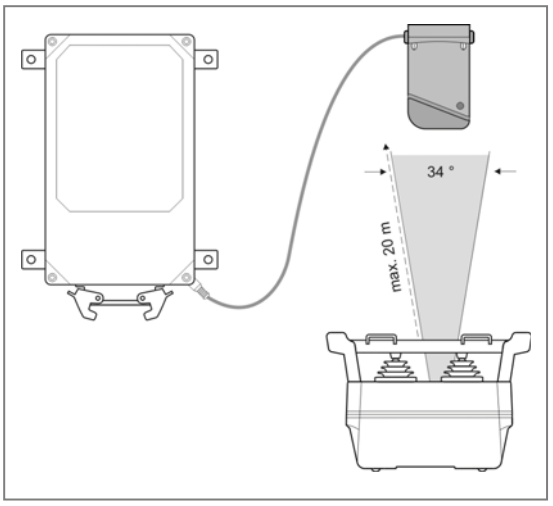

Function of radiomatic® infrakey with focus I

Notes:

- The range of the infrared beam is max. 20 m (66 ft).
- The angle of radiation is 34°.
- The front panel of the receiver must be visible (only radiomatic® infrakey internal).

Cable Control

With a cable you can generate a direct data connection between the transmitter and receiver. The radio transmission is disabled. At the same time, the power supply of the transmitter is provided through the cable, as well.

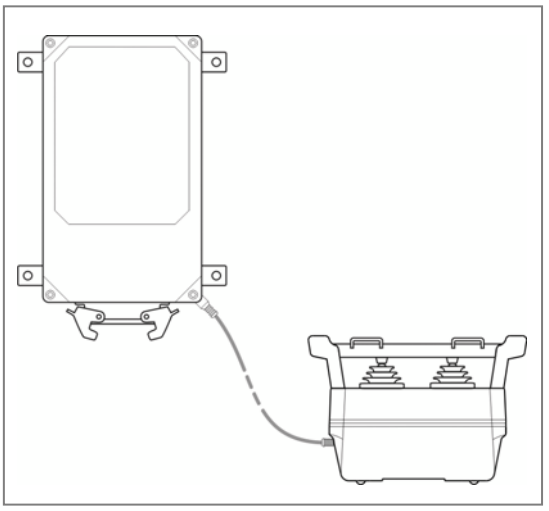

Connecting the cable

1. Switch the transmitter off.
2. Remove the screw lock on the transmitter and receiver.
3. Connect the transmitter and the receiver with the cable. Ensure that the connector is locked.
4. Switch the transmitter on.

Notes:

- If you connect the cable while working with the system, the Actuate the start button to switch to cable operation.
- When the system is in cable mode the transmitter will receive the supply voltage from the receiver, i.e. the transmitter can be used without the battery.
- If you disconnect the cable from the transmitter and receiver, the system will switch off automatically. Actuate the start button to switch back to radio operation.

radiomatic® masterkey

This option offers the possibility for the operator to easily exchange a defective transmitter for a spare transmitter. radiomatic® masterkey (key) holds all the pertaining system information such as frequency and address code. When the radiomatic® masterkey is inserted into the spare transmitter all necessary information is transmitted.
Data transfer only works with transmitters that are equipped with this option. Otherwise the radiomatic® masterkey is only used for switching the transmitter on or off.
If a transmitter without radiomatic® masterkey preparation is operated with a radiomatic® masterkey (mechanically the key has the same function), it will therefore continue to function with "its" internally programmed receiver (see type plate).

Address Changeover via Coding Plug

The coding plug activates a preselected frequency and address coding in the transmitter which corresponds with the data of the respective receiver.
If the coding plug is inserted in a spare transmitter, it will receive the same data as the original transmitter. The spare transmitter can therefore now access the receiver

Changing the coding plug:

Turn the union nut to the left and pull out the coding plug.

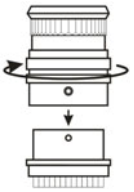

Put the coding plug into the socket of the spare transmitter and lock it by turning the union nut to the right.

Notes:

- Operation is not possible without coding plug.
- If the coding plug is removed during operation the transmitter switches off immediately.
- The coding plug is labeled with the fabrication number of the respective receiver.

Transmitter Key up

With the transmitter key up function, radio commands are only transmitted at the touch of a key and the transmitter will automatically be switched off after 7 seconds of non-use. For example, self-monitoring gates can thus be opened or closed by several operators.
During longer breaks the transmitter must be switched off by pressing the STOP switch.
The "transmitter key up" function also saves battery power.

Caution:

The transmitter key up function does not relieve the operator of his responsibility to turn off the transmitter with the STOP switch when not in use.

Utilization of Button ⏻ as Shift Key

The RPM+ and RPM– buttons have a dual function.
If the button ⏻ is kept depressed and the RPM+ resp. RPM– button is also activated, the Motor Start resp. Motor Step command will be output.

Enabling of the Proportional Outputs

The start button must be depressed after the system has been activated and enabled via Si1 (at the receiver). It is not until this has been done that the function of the compact linear levers at the receiver will be enabled.

Rotary Switch for Preselected Speed

Using the rotary switch it is possible to choose between four maximum machine speeds, which are set in accordance with the customer's requirements.

The symbols for the speed adaptation have the following meanings:

= maximum speed 100 %

= maximum speed, limited to 75 %

= maximum speed, limited to 50 %

= maximum speed, limited to 25 %

Slewing Gear Release

Note:
Whenever the command "slewing gear release" is actuated by means of the radio control, it is important that the respective check be made.
Due to the above, a clearly visible indicator lamp should be installed on the machine.

Feedback by LED

Using this function, system or machine data can be displayed on the transmitter by LEDs.

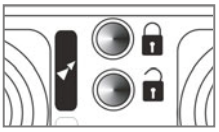

Pre-selection of Trolley or Hoist

The operator is able to select the trolley or hoist that he wishes to control. It is also possible to simultaneously control both trolleys/hoists, for example in order to transport particularly long or wide loads.

Technical Data

Max. number of control commands	54 digital + 10 prop. + STOP
Frequency range	334 – 338 MHz, 400 – 475 MHz[1], 865 – 870 MHz, 902 – 928 MHz DECT: 1880 – 1900 MHz [1] Not all frequency ranges available.
Channel spacing	12,5 / 20 / 25 / 50 / 250 kHz DECT: 1,728 MHz
Transmitting power	TC/TX 641: < 10 mW TC 680/690: < 10 mW TC 681/691: < 5 mW TX 681/691: < 5 mW TC 645: < 10 mW (ERP) TC 685/695: < 5 mW (ERP) DECT: nominal 10 mW
Supply voltage	7,2 V
Battery type	FuB 06 EEX
Battery capacity	1000 mAh
Continuous operating time	5 – 10 h
Transmitter antenna	external
Unique system addresses	over 1.000.000 possibilities
Operating temperature range	-20 °C – +60 °C (-4 °F – +140°F)
Relative humidity (no condensation)	80 % at T_a > 40 °C
Housing material	conductive plastic
Dimensions	refer to chapter Dimensions
Weight	ca. 2,0 kg (4.4 lb.)
Protection class	IP 65
EC Type Examination Certificate	IBExU06ATEX1056
Marking	Ⓔx I M2 Ex ib I (option) Ⓔx II 2G Ex ib IIB T4 Ⓔx II 2D Ex tD A21 IP65 T80°C

Dimensions

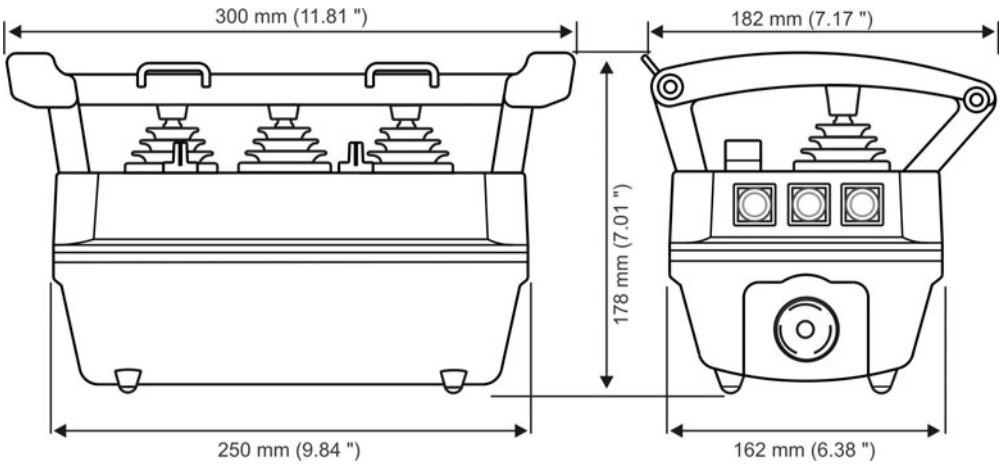

Troubleshooting

Note:
Please check the functions using the cabin or cable controls first!

Problem	Possible Cause	Remedy
Transmitter does not react when switched on.	– No power.	– Check battery contacts for damage or contamination. – Insert a fully charged battery into the battery compartment. – Recharge battery.
Low-power indication after minimal operating time.	– Battery contacts are contaminated or damaged. – Battery not charged. – Battery defective.	– Check battery contacts for damage or contamination. – Recharge battery. – Ensure that recharging process runs correctly. – Check transmitter functions using a fully charged or replacement battery.
The display in the transmitter flashes green but it is not possible to effect control commands.	– Receiver has no voltage. – No radio communication. – "Crane On" command has not been given.	– Check the connecting cable to the receiver. – Check the functions via the LEDs in the radio status panel of the receiver.
Some commands are not carried out.	– Receiver defective. – Interruption in the connecting cable to the machine.	– Check if all connecting cables and cable junctions are tight.

If none of the measures mentioned resolve the problem, then please contact your service technician, dealer or HBC-radiomatic GmbH.

Maintenance

The radio control system is virtually maintenance-free. Please observe the following points:

- Check the STOP switch functionality at regular intervals. Dirt deposits on the switch can hinder the mechanism and impair the function.
- Check the rubber bellows or rubber seals of the operating elements at regular intervals for leak-tightness. Replace immediately if cracks appear since the penetration of dirt and humidity may damage the function of the operating elements.
- Never use a high-pressure cleaner or sharp or pointed objects to clean the transmitter.
- Charge and discharge transmitter batteries regularly.

In the Event of a Fault

Warning:
Never operate a machine with a faulty or defective radio control system!

- Never try to repair the electronics of the radio control system! Opening the transmitter or receiver housing terminates the manufacturer guarantee.
  - Send any defective or faulty equipment to your local distributor or to the manufacturer. They are experts and have the necessary know-how and OEM spare parts.
  - Always send both transmitter and receiver and enclose a detailed description of the problem.
  - Do not forget to enclose your address and telephone number so that we can get in touch with you quickly if necessary.
- To avoid damage during transport, use the original packing supplied with the radio control system, otherwise pack securely. Send the consignment to your distributor or to the following address:

  HBC-radiomatic GmbH
  Haller Str. 45 – 53
  74564 Crailsheim, Germany
  Phone: +49 7951 393-0
  Fax: +49 7951 393-50
  E-Mail: info@radiomatic.com
- Should you choose to deliver a defective radio control system personally to your distributor or our factory, please call and arrange an appointment.

EC Type Examination Certificates

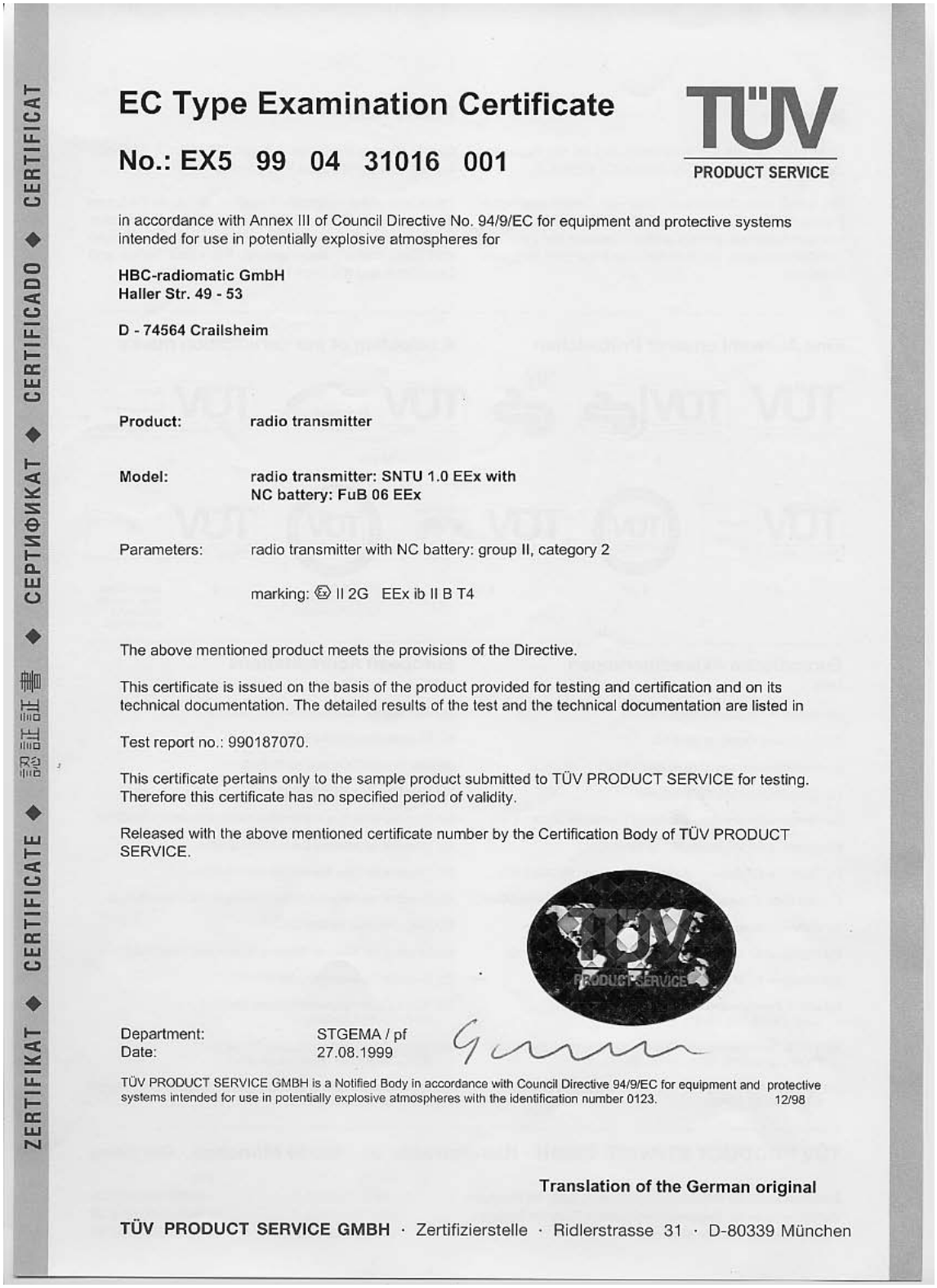

ZERTIFIKAT ◆ CERTIFICATE ◆ 認証証書 ◆ СЕРТИФИКАТ ◆ CERTIFICADO ◆ CERTIFICAT

EC Type Examination Certificate

TÜV PRODUCT SERVICE

No.: EX5 99 04 31016 001

in accordance with Annex III of Council Directive No. 94/9/EC for equipment and protective systems intended for use in potentially explosive atmospheres for

HBC-radiomatic GmbH
Haller Str. 49 - 53

D - 74564 Crailsheim

Product: **radio transmitter**

Model: **radio transmitter: SNTU 1.0 EEx with NC battery: FuB 06 EEx**

Parameters: radio transmitter with NC battery: group II, category 2

marking: ⟨Ex⟩ II 2G EEx ib II B T4

The above mentioned product meets the provisions of the Directive.

This certificate is issued on the basis of the product provided for testing and certification and on its technical documentation. The detailed results of the test and the technical documentation are listed in

Test report no.: 990187070.

This certificate pertains only to the sample product submitted to TÜV PRODUCT SERVICE for testing. Therefore this certificate has no specified period of validity.

Released with the above mentioned certificate number by the Certification Body of TÜV PRODUCT SERVICE.

Department: STGEMA / pf
Date: 27.08.1999

TÜV PRODUCT SERVICE GMBH is a Notified Body in accordance with Council Directive 94/9/EC for equipment and protective systems intended for use in potentially explosive atmospheres with the identification number 0123. 12/98

Translation of the German original

TÜV PRODUCT SERVICE GMBH · Zertifizierstelle · Ridlerstrasse 31 · D-80339 München

IBExU Institut für Sicherheitstechnik GmbH
An-Institut der TU Bergakademie Freiberg

[1] **EC-TYPE EXAMINATION CERTIFICATE**
according to Directive 94/9/EC, Annex III (Translation)

[2] Equipment and Protective Systems intended for use in Potentially Explosive Atmospheres, **Directive 94/9/EC**

[3] EC-Type Examination Certificate Number: **IBExU06ATEX1056**

[4] Equipment: Radio control type spectrum EEX

[5] Manufacturer: HBC-radiomatic GmbH

[6] Address: Haller Str. 47-53
74564 Crailsheim
GERMANY

[7] The design of the equipment mentioned under [4] and any acceptable variations thereto are specified in the schedule to this EC-Type Examination Certificate.

[8] IBExU Institut für Sicherheitstechnik GmbH, NOTIFIED BODY number 0637 in accordance with article 9 of the Council Directive 94/9/EC of 23 March 1994, certifies that this equipment has been found to comply with the Essential Health and Safety Requirements relating to the design and construction of equipment intended for use in potentially explosive atmospheres given in Annex II to the Directive.
The test results are recorded in the test report IB-06-3-076 of 22nd March 2006.

[9] Compliance with the Essential Health and Safety Requirements has been assured by compliance with EN 50014:1997 +A1 +A2, EN 50020:2002 and EN 50281-1-1:1998.

[10] If the sign „X" is placed after the certificate number, it indicates that the equipment is subject to special conditions for safe use specified under [17] in the schedule to this EC-Type Examination Certificate.

[11] This EC-Type Examination Certificate relates only to the design and construction of the specified equipment. If applicable, further requirements of this directive apply to the manufacture and supply of this equipment.

[12] The marking of the equipment mentioned under [4] shall include the following:

mobile transmitter	stationary receiver
Ex **I M2 EEx ib I** resp.	Ex **I (M2) [EEx ib] I** resp.
Ex **II 2G EEx ib IIB T4**	Ex **II (2)GD [EEx ib] IIB**
Ex **II 2D T 80°C IP 65**	
-20 °C ≤ T_a ≤ 60 °C	-20 °C ≤ T_a ≤ 60 °C

IBExU Institut für Sicherheitstechnik GmbH
Fuchsmühlenweg 7 - 09599 Freiberg, Germany
☎ +49 (0) 3731 3805-0 - 🖷 +49 (0) 3731 23650

Authorised for certifications
-Explosion protection-

By order

(Dr. Lösch)

- Seal -
(ID no. 0637)

Freiberg, 22nd March 2006

Certificates without signature and seal are not valid. Certificates may only be duplicated completely and unchanged. In case of dispute, the German text shall prevail.

Schedule

IBExU Institut für Sicherheitstechnik GmbH
An-Institut der TU Bergakademie Freiberg

[13] **Schedule**

[14] **to the EC-TYPE EXAMINATION CERTIFICATE IBExU06ATEX1056**

[15] **Description of equipment**

The radio control spectrum EEX serves for transmission of commands for controlling of cranes, hoists and machines. It consists of a plastic enclosure with manual control and indicator elements and built in electronic circuits for transmitter and receiver operation. For power supply serves one removable battery alternatively optional cable joint to the stationary receiver. The charging of battery has to take place outside of explosive atmospheres.

Technical Data

Ambient temperature range	-20 °C to +60 °C
Frequency range	35 / 70 / 17 cm-band
Transmitter power	< 10 mW
Removable battery	FuB 06 EEX

Optional:

Power supply for Cable joint	Comp. Stahl 9143/10-104-220-10 resp. -20
Barrier for data link	Comp. Stahl 9002/77-093-300-001

Details are covered in test documents, they are part of the test report.

[16] **Test report**

The test results are recorded in the test report IB-06-3-076. The test documents are part of the test report and listed there.

Test result:
The intrinsically safe radio control fulfils the requirements of explosion protection for equipment of Group I and Category M2 as well as Group II. Category 2G + 2D type of protection Intrinsic Safety.

Safety instructions:
Charging of battery and installation of the stationary receiver is to be carried out outside of explosive atmospheres or in one of standardised type of protection according to EN 50014.

[17] **Special conditions for safe use**

None

[18] **Essential Health and Safety Requirements**

Confirmed by compliance with standards (see [9]).

By order

(Dr. Lösch)

Freiberg, 22nd March 2006

IBExU Institut für Sicherheitstechnik GmbH

An-Institut der TU Bergakademie Freiberg

[1] **EC-TYPE EXAMINATION CERTIFICATE**

according to Directive 94/9/EC, Annex III

(Translation)

[2] Equipment and Protectiv Systems intended for use in Potentially Explosive Atmospheres, Directive 94/9/EC

[3] EC-Type Examination Certificate Number: **IBExU03ATEX1189**

[4]	Equipment:	Radio Transmitter Type SNTU 1.0 EEx
[5]	Manufacturer:	HBC-radiomatic GmbH
[6]	Address:	Haller Str. 49-53 D-76564 Crailsheim

[7] This equipment and any acceptable variation thereto are specified in the schedule to this EC-Type Examination Certificate.

[8] IBExU Institut für Sicherheitstechnik GmbH, NOTIFIED BODY number 0637 in accordance with article 9 of the Council Directive 94/9/EC of 23 March 1994, certifies that this equipment or protective system has been found to comply with the Essential Health and Safety Requirements relating to the design and construction of equipment intended for use in potentially explosive atmospheres given in Annex II to the Directive. The examination and test results are recorded in the test report IB-03-3-894 of 20.04.2004.

[9] Compliance with the Essential Health and Safety Requirements has been assured by compliance with EN 50014:1997+A1+A2, EN 50020:2002 und EN 50281-1-1:1998.

[10] If the sign "X" is placed after the certificate number, it indicates that the equipment is subject to special conditions for safe use specified under [17] in the schedule to this EC-Type Examination Certificate.

[11] This EC-Type Examination Certificate relates only to the design and construction of the specified equipment. If applicable, further requirements of this directive apply to the manufacture and supply of this equipment.

[12] The marking of the equipment mentioned in [4] shall include the following:

Ex I M2 EEx ib I

Ex II 2D T 80°C IP 65

-20 °C ≤ Ta ≤ 60 °C

IBExU Institut für Sicherheitstechnik GmbH
Fuchsmühlenweg 7 - D-09599 Freiberg
Tel.: 0049 3731 3805-0 - Fax: 0049 3731 23650

Authorised for certifications
- Explosion protection -

By order

(Dr. Lösch)

Zertifizierungsstelle Explosionsschutz IBExU Institut für Sicherheitstechnik GmbH Kenn-Nr. 0637

- Seal-
(ID no. 0637)

Freiberg, 21.04.2004

Certificates without signature and seal are not valid.
Certificates may only be duplicated completely and unchanged. In case of dispute, the German text shall prevail.

Schedule

[13] **Schedule**

[14] **to the EC-TYPE EXAMINATION CERTIFICATE IBExU03ATEX1189**

[15] **Description of equipment**

The radio transmitter SNTU 1.0 EEX is designed to transmit command instructions for controlling industrial and mobile cranes, hoists and machines in potentially explosive areas (mines susceptible to firedamp and dust explosiv). It consists of a plastic housing with actuators and indications and internal intriscally prints. Power supplys by rechargeable batteries, charching must be outside of potentially explosive ares.

Electrical data

Ambient temperature range	-20 °C bis +60 °C
Frequency range	30 / 70 cm wave band
Transmitter power	< 10 mW
Exchangeable Battery:	FuB 06 EEX

Details which are component of the test report are contained in the test documents.

[16] **Test report**
The proof of the explosion protection is recorded in detail in the test report IB 3-3-894.
The test documents are component of the test report and listed there.

Safety instruction
Charching of battery has to bee outside of potentially explosive ares, according to EC-Type Examination Certificate TÜV Nr. EX5 99 04 31016 001.

[17] **Special conditions**
none

[18] **Essential Health and Safety Requirements**

Confirmed by norms (see [9]).

By order

Freiberg, 21.04.2004

(Dr. Lösch)

Frequency List for Europe (10/2007)

f-liste-en-2007-v1 [PMSK/DOKUS]

	433,050 MHz–434,790 MHz 100 % duty cycle according to ERC 70-03	434,040 MHz–434,790 MHz 100 % duty cycle according to ERC 70-03
Austria		X
Belgium		X
Bosnia and Herzegovina		X
Bulgaria		X
Croatia		1)
Cyprus		X
Czech Republic		X
Denmark		X
Estonia		X
Finland		X
France	X	X
Germany	X	X
Greece		
Hungary		1)
Iceland		X
Ireland		X
Italy		X
Latvia		X
Liechtenstein		X
Lithuania		X
Luxembourg		X
Macedonia		X
Malta		X
Montenegro		X
Norway		X
Poland		X
Portugal		X
Romania		
Serbia		X
Slovakia		X
Slovenia		X
Spain		X
Sweden	X	X
Switzerland		X
The Netherlands	X	X
Turkey		X
United Kingdom	X	X

1) with restrictions

CE! **Important note:**
Equipment with CE! marking may only be placed on the market in countries marked with **X**. Please observe the frequency indicated on the name plate of the equipment.

CE **Important note:**
Equipment with CE marking may be placed on the market in all EU member states (e.g. frequency band 869,700 – 870,000 MHz).
Please observe the frequency indicated on the name plate of the equipment.
Additional national frequencies available on request.

Form	Return Delivery Note	

HBC-radiomatic GmbH
Haller Str. 45 – 53

74564 Crailsheim, Germany

Transaction No. (provided by HBC):
.....

Phone: + 49 (0)7951 393 800
Fax: + 49 (0)7951 393 802
Email: service@radiomatic.com
Internet: www.hbc-radiomatic.com

Contact for further information:

Contact person: ..... …….. Phone: ..... Fax: …….

..... Email: ……

Reason for return *):

Repair ☐ Estimate required? yes ☐ no ☐

Modification ☐

Wrong order ☐ customer's order no.: ……

Wrong delivery ☐

For credit ☐ corresponding invoice no.: ……. ……..

*) in order to work on your return rapidly, please state precisely the fault report and invoice no.

HBC Fabr. No.: .....

Transmitter: .....

Receiver: .....

Charger: .....

Batteries: .....

Cable: .....

Other accessories: .....

PCB ..... from system

Fabr. No.: .....
.....
.....
.....

Description of problem:

.....
.....
.....
.....
.....
.....

Absolutely necessary information::

Problem appears:
- due to vibration / shock ☐
- if warm or hot ☐
- if cold ☐
- sometimes ☐ commonness: ……
- always ☐
- never ☐ (in good order, not needed pcb)

Note:

For system repairs, please send (if possible) the complete system including transmitter, receiver, batteries, charger and cable with detailed description of the problem.

The return is subject to the conditions described in paragraph 8 (Guarantee) in our standard terms & conditions.

Returns will only be accepted **CIF Crailsheim, Germany**. Preferred shipping via **DPD** and **UPS Standard**.
Please use the original HBC packaging if possible. Please use proper packaging to avoid electrostatic discharge hazards with pcbs and/or modules. Warranty claims may not be accepted in case of improper packaging.
Returns shipped ex works or unpaid will not be accepted without express written consent by HBC.

Formblatt	Rücklieferschein	

HBC-radiomatic GmbH
Haller Str. 45 – 53

74564 Crailsheim

Tel.: + 49 (0)7951 393 800
Fax: + 49 (0)7951 393 802
E-Mail: service@radiomatic.com
Internet: www.hbc-radiomatic.com

Vorgangs-Nr. (von HBC vergeben)

.....

Kontakt bei Rückfragen

Ansprechpartner: ..... …….. Telefon: ..... Fax: …….

..... Email: ……

Grund der Rücklieferung *):

Reparatur ☐
Umbau ☐
Falschbestellung ☐
Falschlieferung ☐
zur Gutschrift ☐

Kostenvoranschlag gewünscht? ja ☐ nein ☐

zu Bestell-Nr.: ……

zu Rechnungs-Nr.: .....

*) Um Ihre Rücklieferung rasch bearbeiten zu können, geben Sie bitte die Fehlerbeschreibung sowie die Rechnungs-Nr. der Ware an.

HBC Fabr. Nr.: .....

Sender: .....

Empfänger: .....

Ladegerät: .....

Akkus: .....

Anschlusskabel: .....

Sonstiges Zubehör: .....

Platine..... aus System

mit Fabr. Nr.: .....

Fehlerbeschreibung:

.....

.....

.....

.....

.....

.....

unbedingt auszufüllen::

Mangel tritt auf:
- bei Erschütterung ☐
- bei Wärme ☐
- bei Kälte ☐
- manchmal ☐ Häufigkeit: .....
- immer ☐
- nie ☐ (intakte, nicht benötigte Platine)

Hinweis:

Bitte senden Sie bei System-Reparaturen möglichst das komplette System zurück - inkl. Sender, Empfänger, Akkus, Ladegerät und eventuell Anschlusskabel mit einer detaillierten Fehlerbeschreibung.

Die Rücksendung erfolgt unter Beachtung der in Ziffer 8 (Gewährleistung) unserer Allgemeinen Geschäftsbedingungen enthaltenen Bestimmungen.

Bitte liefern Sie die Ware **frei Haus** an uns zurück! Bevorzugte Speditionen: **DPD** und **UPS Standard**. Verwenden Sie möglichst die original HBC Umverpackung für die Rücklieferung. Für elektronische Bauteile und/oder Platinen ist eine ESD-Schutz-Verpackung zu verwenden. Garantieansprüche können bei Fehlen der ESD-Schutz-Verpackung erlöschen.
Anlieferungen „unfrei“ ohne vorherige schriftliche Freigabe durch HBC werden nicht akzeptiert.

EC Declaration of Conformity

accordance with EC Machinery Directive 2006/42/EC, Annex II, and
in accordance with R&TTE Directive 1999/5/EC, Annex III

The manufacturer:

HBC-radiomatic GmbH
Haller Strasse 45 – 53 • 74564 Crailsheim • Germany

hereby declares that the following products:

CE

Transmitter	**spectrum EEX**	
Marking:	Ⓔx II 2G Ex ib IIB T4, Ⓔx II 2D Ex tD A21 IP65 T80°C	
EC Type Examination Certificate No.:	IBExU06ATEX1056	
Issued by notified body:	IBExU Institut für Sicherheitstechnik GmbH 09599 Freiberg, Germany	
Identification Number:	0637	
Battery	**FuB 06 EEX**	
Marking:	Ⓔx II 2G Ex ib IIB T4	Ⓔx II 2D Ex tD A21 IP65 T80°C Ⓔx I M2 Ex ib I
EC Type Examination Certificate No.:	Ex5 99 04 31016 001	IBExU03ATEX1189
Issued by notified body:	TÜV Product Service GmbH Zertifizierstelle 80339 München, Germany	IBExU Institut für Sicherheits- technik GmbH 09599 Freiberg, Germany
Identification Number:	0123	0637

safety component according to the Machinery Directive (2006/42/EC),
conforms to all applicable provisions of the Machinery Directive (2006/42/EC).

The identified product also conforms to all provisions of the following European Directives:

2006/95/EC ..... Low Voltage Directive
2004/108/EC ..... Electromagnetic Compatibility
1999/5/EC ..... R&TTE Directive (Radio & Telecommunications Terminal Equipment)
94/9/EC ..... Equipment and protective systems intended for use in potentially
..... explosive atmospheres

The following harmonized standards were applied:

EN ISO 13849-1:2008 ..... Safety of machinery - Safety-related parts of control systems
..... Part 1: General principles for design
EN 60204-1:2006 ..... Safety of machinery - Electrical equipment of machines
..... Part 1: General requirements
EN 60950-1:2006 ..... Information technology equipment - Safety
..... Part 1: General requirements
EN 301 489-1:2008-04 V1.8.1 ..... Electromagnetic compatibility and Radio spectrum Matters (ERM)
..... Part 1: Common technical requirements
EN 301 489-3:2002-08 V1.4.1 ..... Electromagnetic compatibility and Radio spectrum Matters (ERM)
..... Part 3: Specific conditions for Short-Range Devices (SRD)
EN 300 220-2:2007-06 V2.1.2 ..... Electromagnetic compatibility and Radio spectrum Matters (ERM)
..... Part 2: Harmonized EN covering essential requirements under article 3.2
..... of the R&TTE Directive
EN 60079-0:2006 ..... Electrical apparatus for explosive gas atmospheres
..... Part 0: General requirements
EN 60079-11:2007 ..... Explosive atmospheres
..... Part 11: Equipment protection by intrinsic safety "i"
EN 61241-0:2006 ..... Electrical apparatus for use in the presence of combustible dust
..... Part 0: General requirements
EN 61241-1:2004 ..... Electrical apparatus for use in the presence of combustible dust
..... Part 1: Protection by enclosures "tD"

The following national regulations were applied:

ZH 1/547:1976 ..... Guidelines for radio control units of cranes
BGR 149:1995 ..... Rules for the safety of equipment for wireless transmission of
..... control commands

Quality management system according to DIN EN ISO 9001:2008 by: LGA InterCert GmbH
Tillystr. 2
90431 Nürnberg, Germany

Person responsible for documentation: Martin Schuster

Note: The commissioning of the machine in which this product was incorporated, is prohibited until it has been determined that the machine conforms to the provisions of the Directive 2006/42/EC.

Place and date:

Valid signature:

Name: Wolfgang Brendel

(Managing Director)

SERVICE MANUAL

RX-HL SERIES

www.hetronic.com

YOUR #1 PARTNER IN RADIO REMOTE CONTROLS

SRVC_BB_001.0
November 2007

TABLE OF CONTENTS

Safety 1
- Safety Alerts 1
- Notations 1
- Practices and Laws 1
- Required Operator Training 1
- Possible Sources of Danger 1
- Protective Features 1
- To Stop In An Emergency 1
- Maintenance 1

Introduction 2
- Your Manuals 2
- Production and System Numbers 2
- Replacement Parts 2
- Before Operating Your System 2

About Your Receiver 3
- Description and Features 3
  - General Description 3
  - General Description (Continued) 4
  - RX 14-HL Features 4
- Mounting Your Receiver 6
- Installing Your Output Wiring 7
- Connecting Your Electrical Wiring 7
- Attaching Your Wiring Harness 7

Components and Connections 8

Accessories 16
- Installing Your External Antenna (Optional) . 16
- About Expansion Boards (Optional) 17
- Installing Your Expansion Board (Optional) . 18

Troubleshooting 20

Specifications 22
- Standard Configurations 23

Forms and Additional Information 24
- Installation and Safety Data Sheet 24
- Machine Data 24
- AWG Metric Conversions 25
- Glossary 25
- Abbreviations 26

SAFETY

SAFETY ALERTS

The safety alert symbol is used in decals on the unit and with proper operation procedures in this manual.

Understand the safety message. It contains important information about personal safety on or near the unit.

DANGER:IMMINENTLY HAZARDOUS SITUATION! If not avoided, WILL RESULT in death or serious injury.

WARNING: POTENTIALLY HAZARDOUS SITUATION! If not avoided, COULD RESULT in death or serious injury.

CAUTION: POTENTIALLY HAZARDOUS SITUATION! If not avoided, MAY RESULT in minor or moderate injury. It may also be used to alert against unsafe practices.

NOTATIONS

NOTE: General reference information for proper operation and maintenance practices.

IMPORTANT: Specific procedures or information required to prevent damage to unit or attachment.

PRACTICES AND LAWS

Practice usual and customary safe working precautions for the benefit of yourself and others. Be alert to unsafe conditions and the possibility of minor, moderate, or serious injury or death. Learn applicable rules and laws in your area.

REQUIRED OPERATOR TRAINING

Original purchaser of this unit was instructed by the seller on safe and proper operation. If unit is to be used by someone other than original purchaser; loaned, rented or sold, ALWAYS provide this manual and any needed safety training before operation.

ALWAYS read and understand the documentation for any machine to be controlled by radio remote control.

POSSIBLE SOURCES OF DANGER

This device is part of a system that makes remote control via radio signals possible. However, the transmission of control commands can take place around obstacles and out of the operator's direct sight. Take the following precautions to prevent accidental start-up and possible injury or damage:

1. Switch "OFF" the transmitter when it is not in use. If equipped, remove the key if the unit is placed any distance away from the operator.
2. Disconnect the power supply from the receiver before any assembly, maintenance or repair work is done.

IMPORTANT: AVOID SYSTEM DAMAGE - ALWAYS disconnect receiver power supply and control wiring before welding on any part of the machine

3. Never remove or alter any of the safety features.
4. **ALWAYS** confirm that the machine and radio remote control Stop functions work properly **BEFORE** beginning any machine operation.

PROTECTIVE FEATURES

This system is equipped with electronic and mechanical safety features. Control signals from other transmitters cannot be processed because transmission coding is unique to each system

TO STOP IN AN EMERGENCY

1. Press the red STOP pushbutton.
2. If equipped, turn the key to "OFF".
3. Wait for all moving machine parts to stop.
4. Refer to machine's operator manual for further instructions.

MAINTENANCE

Always shut off power to the machine, transmitter and receiver before any assembly, maintenance or repair.

INTRODUCTION

Thank you for purchasing the Hetronic radio remote control system. Hetronic radio remote controls provide outstanding remote control value, quality, performance and safety.

YOUR MANUALS

Before operation of your machine and radio remote control system, read and understand the manuals for all of your system components.

PRODUCTION AND SYSTEM NUMBERS

Before contacting your dealer or Hetronic about service, repair or replacement parts, note the equipment Production and System numbers. These numbers are located on the label affixed to the unit.

REPLACEMENT PARTS

Use only Hetronic replacement parts. Use of other replacement parts may adversely affect the performance, durability, and safety of this system and may void the warranty.

Hetronic disclaims liability for any claims or damages, whether warranty, property damage, personal injury or death arising out of the use of unauthorized replacement parts.

BEFORE OPERATING YOUR SYSTEM

Confirm that installation of all your system components has been properly completed.

ALWAYS confirm that the machine and radio remote control Stop functions work properly.

Understand all Safety Precautions provided in the manuals and review control functions and operation of the machine and this radio remote control system.

Confirm that surge suppressors are used when the receiver is controlling magnetic contactors.

When not in use, turn the transmitter off and store in a safe place to prevent unauthorized use.

If the machine does not respond properly, immediately stop operation. Turn off the transmitter and report the condition to your supervisor.

Turn off the transmitter and remove the key (if so equipped) before any maintenance work is done.

Always have fresh batteries on hand or an optional rechargeable battery pack in the battery charger to ensure the availability of a fully charged battery.

Installation, setup and service must be performed by authorized and qualified personnel only.

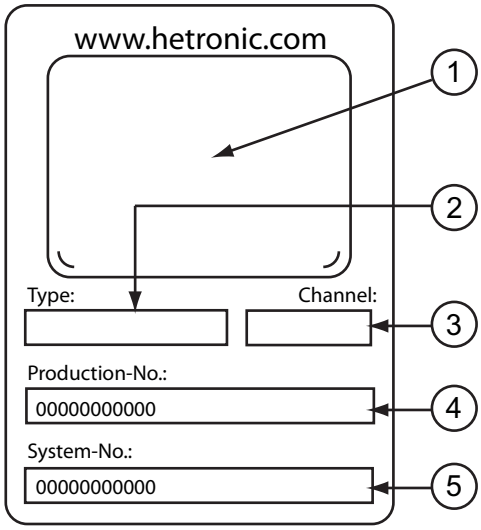

Unit Label Areas and Meanings

1. Specific approvals, such as BTZ, FCC, CE, etc.
2. Type of transmitter or receiver.
3. Frequency and RF unit.
4. Eleven-digit Production Number.
5. Eleven-digit System Number.

Figure 1: Unit Label Areas and Meanings

About Your Receiver

Description and Features

General Description

The RX 14-HL is an expandable receiver baseboard that has been designed to work in conjunction with a variety of transmitting devices. For detailed transmitter information, see your transmitter documentation.

Several expansion boards are available for use with this receiver baseboard, providing additional analog and digital outputs.

For more information regarding expansion boards, see “About Expansion Boards (Optional)” on page 17.

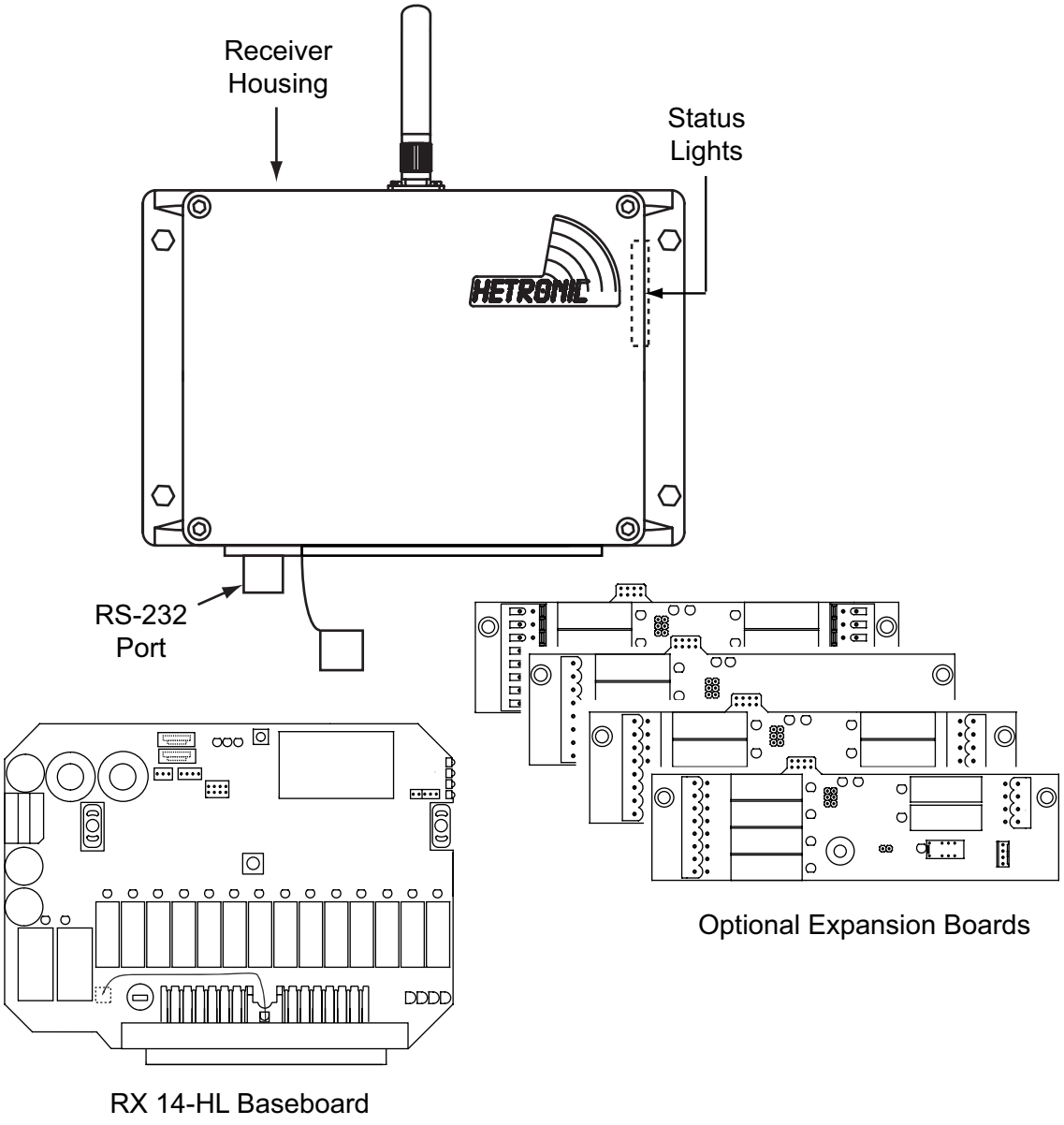

Figure 1: Receiver Housing, Baseboard and Optional Expansion Boards

General Description (Continued)

The RX 14-HL is contained within a IP65-rated housing that provides reliable protection from routine cleaning and the elements.

Four LED status lights located on the right side of the housing provide the operator with important operating status information. See “Status Lights” on page 5.

Power for the receiver baseboard can be supplied in 2 ways: 1) using AC power (120 to 240 Vac) or 48 Vac with a separate input, 2) using DC power with inputs ranging from 8 to 30 Vdc.

The receiver baseboard features 4 optically isolated signal inputs and the following 3 outputs:12 SPST relays, 2 SPDT power relays, and 1 Serial Peripheral Interface (SPI) to connect various expansion boards.

Input and output operating parameters are adjustable using a Pocket PC, MFSHL-232 Adapter, H-Link modem and H-Link software.

For detailed programming instructions, see the "H-Link Programming Manual for Pocket PC--Receiver Type: RX 14-HL." Document Number: PRO_RX14_W_0.

RX 14-HL Features

- 1 E-Stop output
- 4 optically isolated signal inputs (8-30Vdc or 48-240Vac)
- 14 hardwired digital outputs
- Expansion of up to 16 additional digital outputs
- Expansion of up to 4 additional proportional outputs
- RS-232 interface for back up cable control and programming
- 12-24Vdc supply power for DC applications
- AC supply (120 to 240 Vac) or 48 Vac with separate input
- Built-in Hetronic 70 pin quick disconnect connector
- External antenna

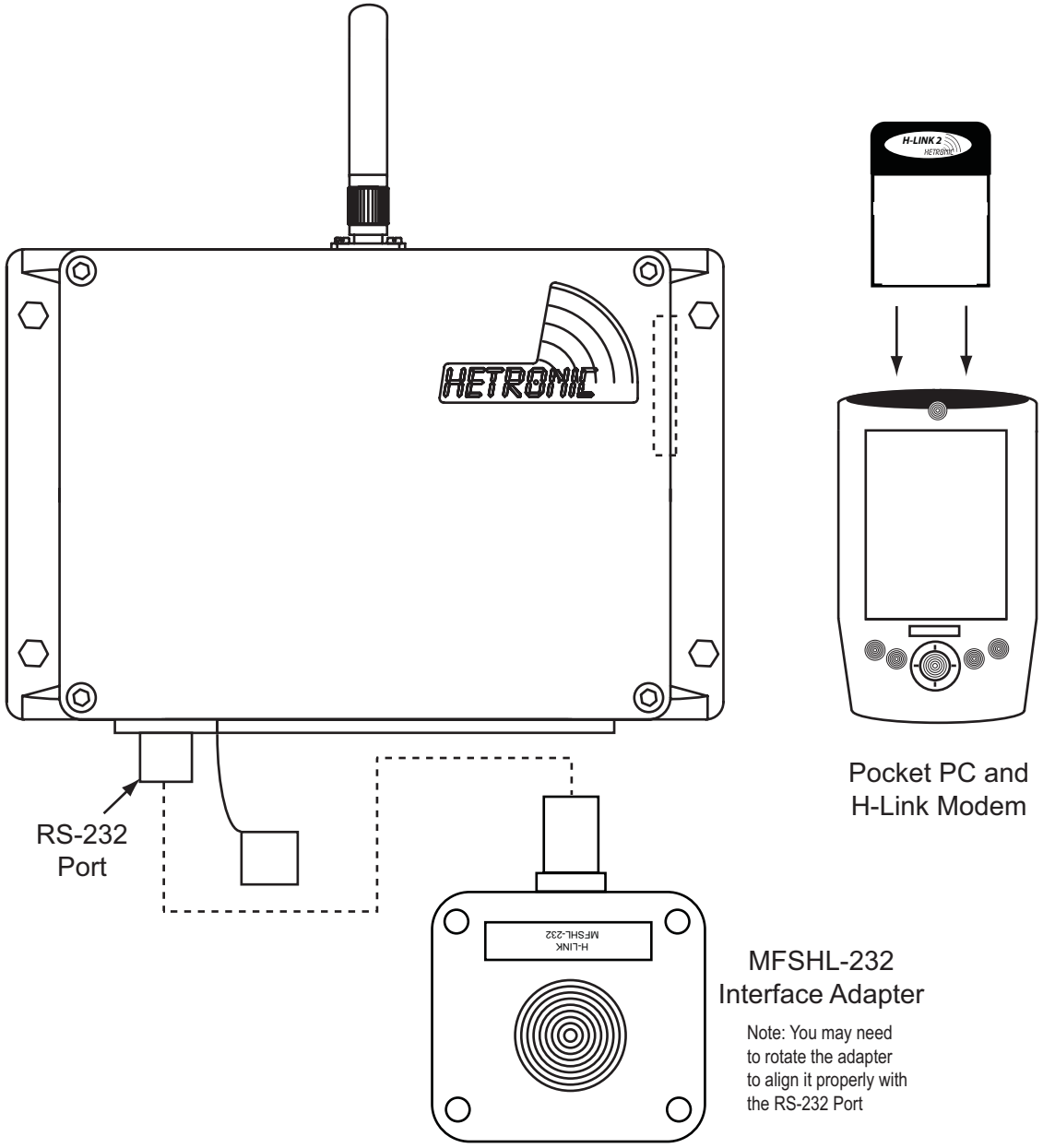

Figure 2: MFSHL-232 Adapter and Pocket PC with H-Link Modem

Table 1: Status Lights

	Light	Condition		
		Not Lit	Steadily Lit	Blinking
Operation ● Signal ● Error ● Normal ●	Operation	No Power	--	Power Detected
	Signal	Not Receiving	--	Receiving Correct Telegram
	Error	No Error	--	Error Detected
	Normal	Not Receiving	Receiving	--

MOUNTING YOUR RECEIVER

1. Determine the receiver location, keeping in mind the following conditions:
   - The receiver will be accessible and protected from violently thrown materials.
   - The status lights will be visible to the operator.
   - The mounting area will accommodate 4 mounting holes in the required pattern.
   - There will be enough room for the antenna and connector plugs or housings.

NOTE: If the receiver will be mounted inside of a control panel or other enclosure, see "Installing Your External Antenna (Optional)" on page 7.

2. Drill 4 mounting holes. See "Drill Pattern and Hardware" for illustration.
3. Attach the receiver housing to the desired mounting surface.

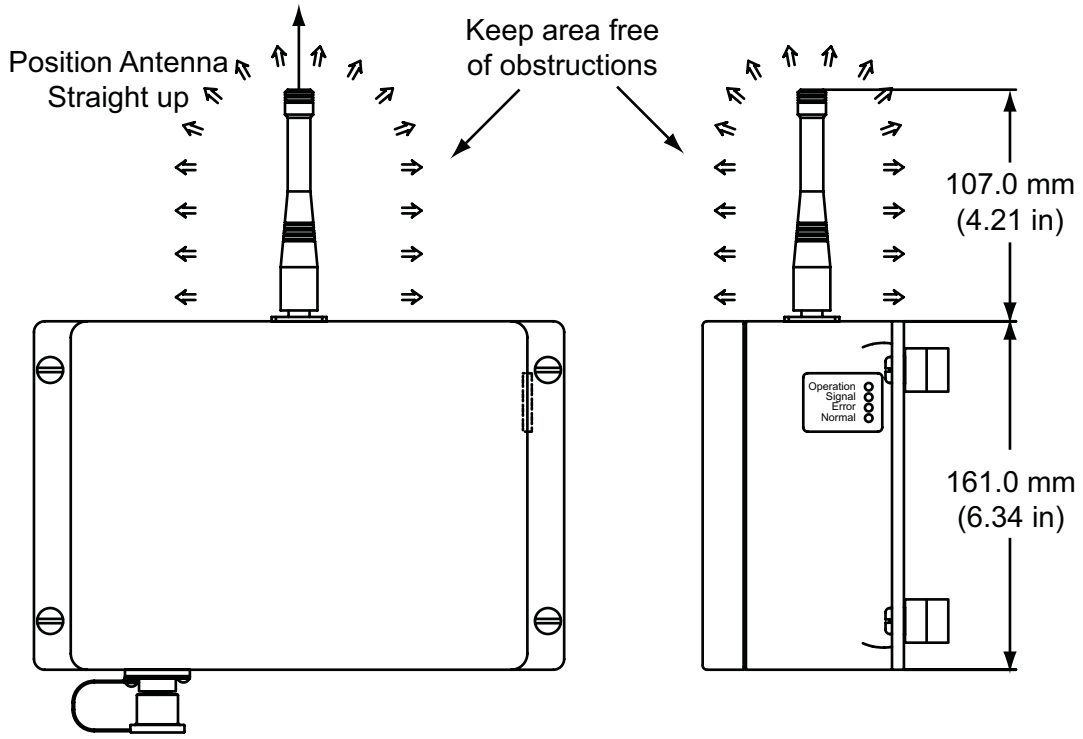

Figure 1: Receiver Dimensions

4. Screw on the antenna provided with the receiver (by the nut). Do not overtighten.

NOTE: For best reception, position the antenna straight up and confirm that the surrounding area is free of obstructions, especially metal.

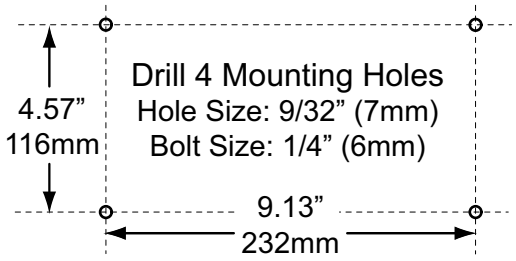

Figure 2: Drill Pattern and Hardware

INSTALLING YOUR OUTPUT WIRING

CAUTION: Assign a qualified technician to connect the wiring.

Improper wiring connections may cause serious component damage and void the warranty.

Output wiring must be properly connected for your specific requirements. Make all connections with good quality contacts or solder joints to ensure proper electrical contact.

Detailed receiver wiring information is supplied with the documentation inside the front cover of your receiver.

Supply voltage and ground wiring must be connected to reliable connecting circuitry.

WARNING: Do not use a chassis ground or equipment damage will result. Connect the ground wire to the vehicle battery negative post.

Assign a qualified technician to calculate the current and voltage drop, and determine the proper cable size for your application.

Power supply wiring must be at least AWG 12 for DC applications (to prevent power drop). For metric equivalent wire and cable sizes, see “AWG Metric Conversions” on page 25.

WARNING: Induced voltage spikes can cause erratic controls performance.

Make sure output control signals for any proportional control valves are routed separately from wiring that could produce transient voltage interference.

CONNECTING YOUR ELECTRICAL WIRING

Connect all remaining wires according to the wiring diagram of the machine and the radio remote control.

ATTACHING YOUR WIRING HARNESS

Plug your wiring harness into the receiver and into the corresponding machine controls.

COMPONENTS AND CONNECTIONS

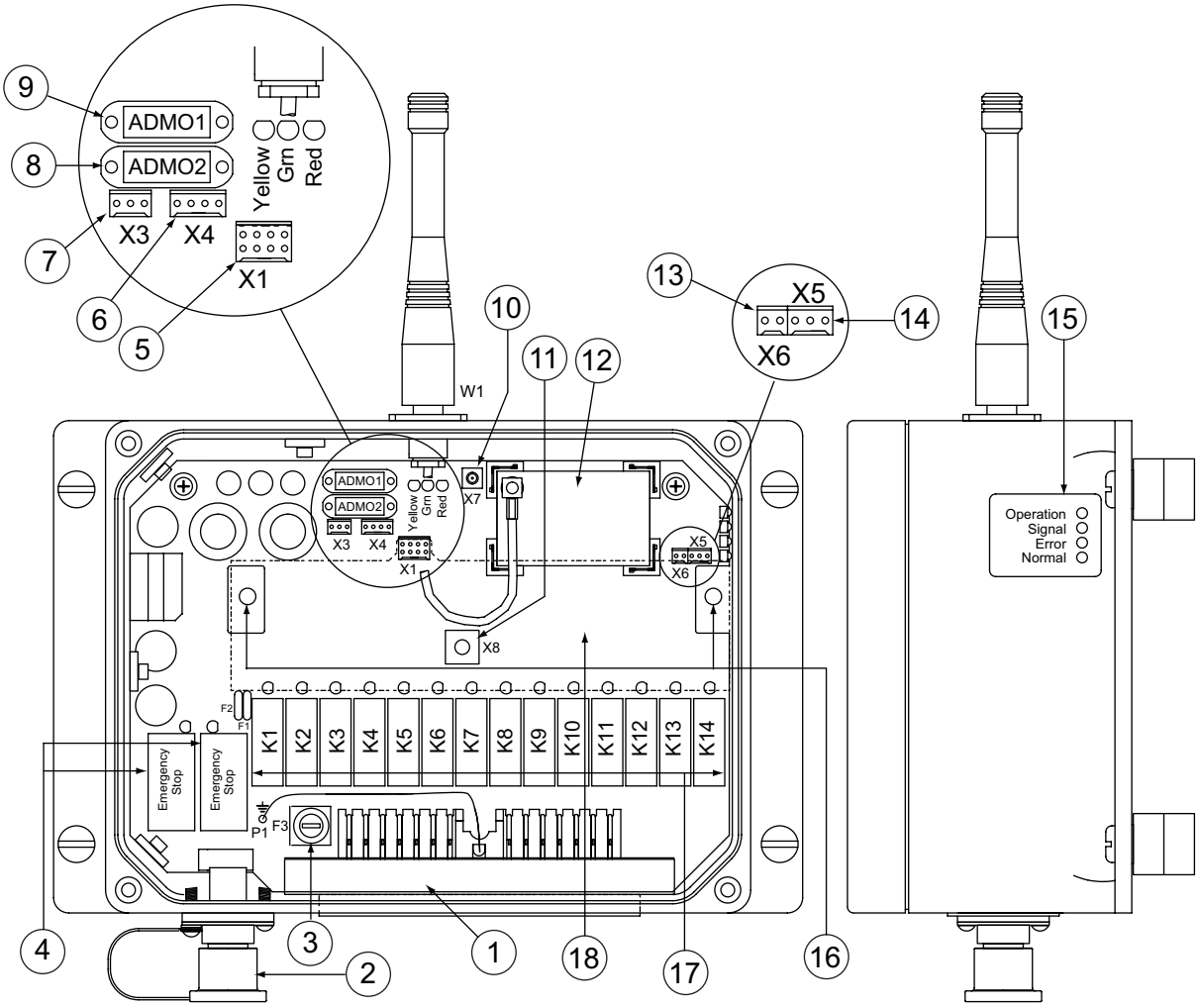

Figure 1: RX 14-HL Components

Table 1: RX 14-HL Components

1	70 Pin Connector (X1)	10	Antenna Port (used with transceiver only)
2	Cable Control/Programming Port (X2)	11	Expansion Board Platform Ground
3	Fuse (6.3AL 250 V)	12	Radio Frequency Module (A2)
4	Emergency Stops (SPST relays)	13	Scan Stop
5	Expansion Board Port (SPI)	14	External Radio Frequency Module Port (X5)
6	RS232 Port	15	Status Lights (LEDs) Diagnostic
7	Voltage Supply Port	16	Mounting Screw Recesses (Threaded)
8	Address Module 2	17	Output Relays (K1-14) with LEDs
9	Address Module 1	18	Expansion Boards (A3/A4)

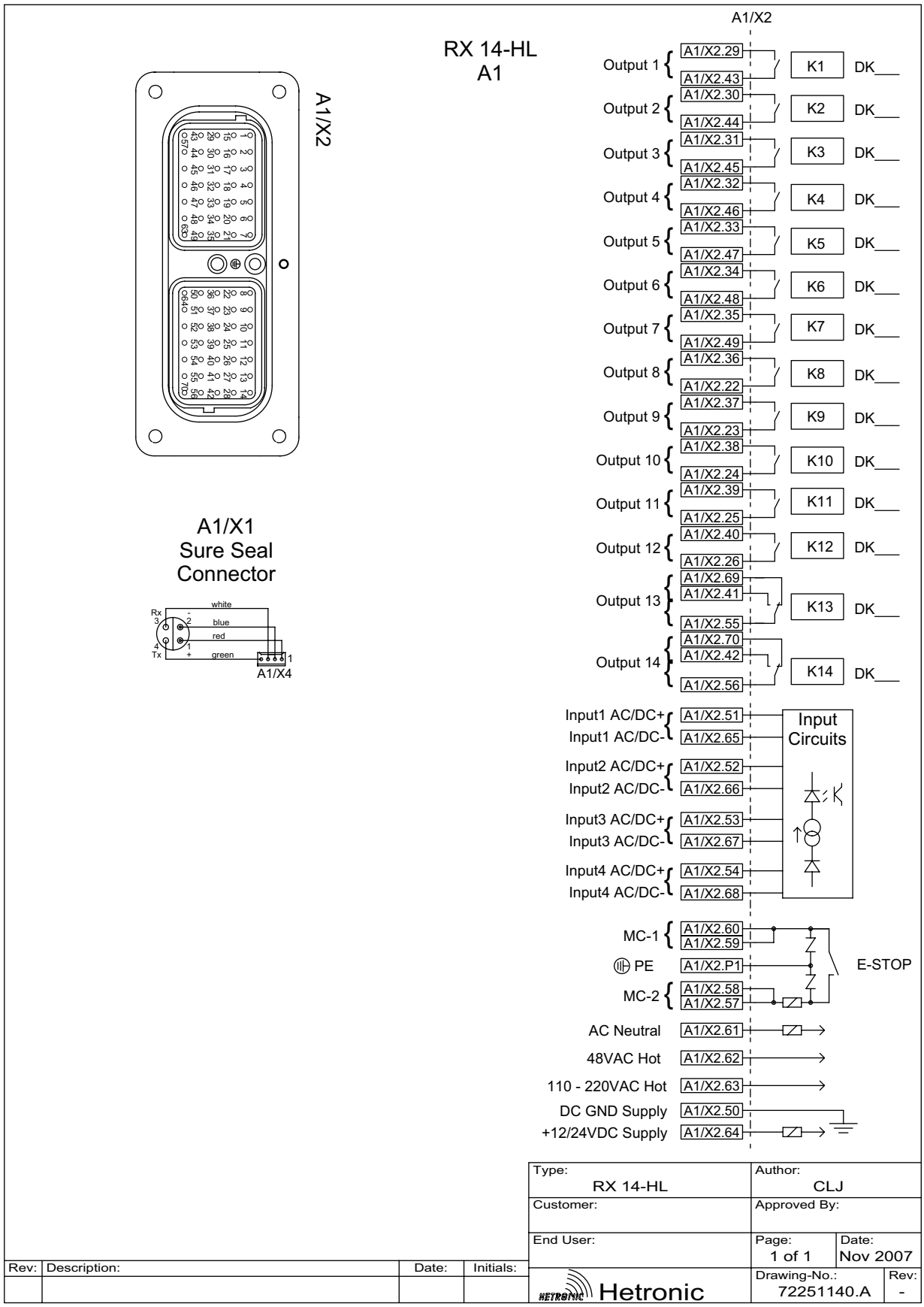

Figure 2: RX 14-HL Connections

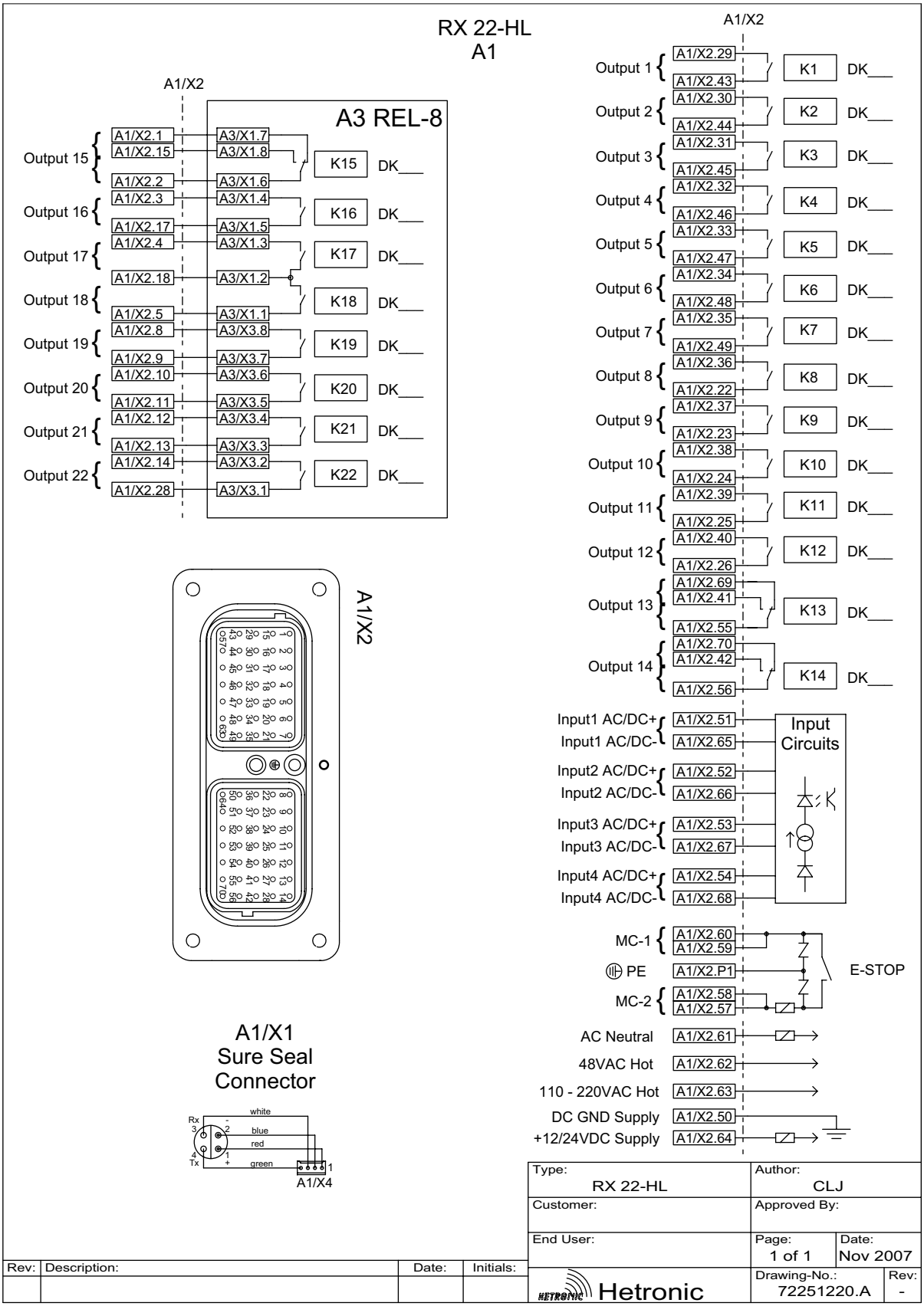

Figure 3: RX 22-HL Connections

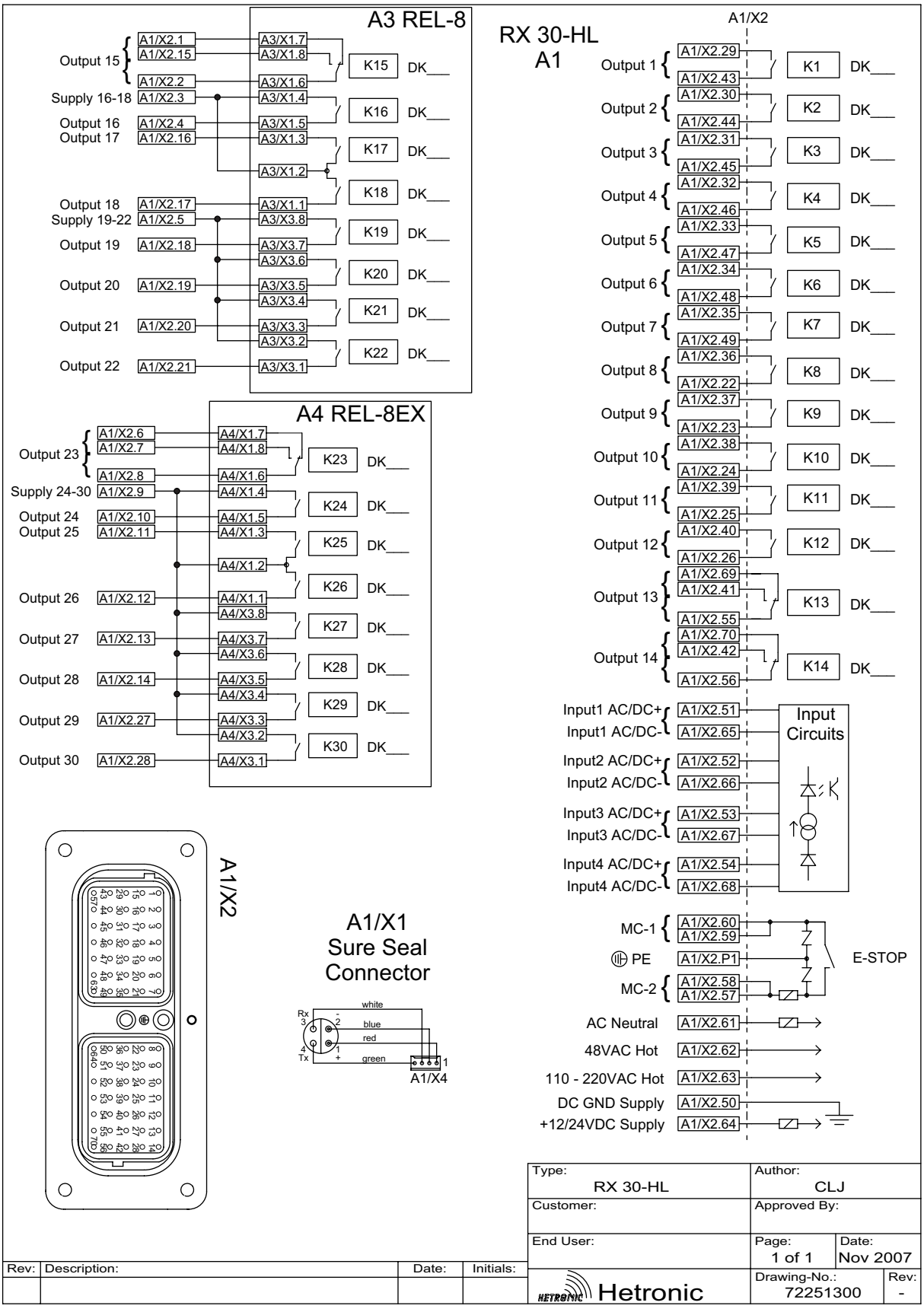

Figure 4: RX 30-HL Connections

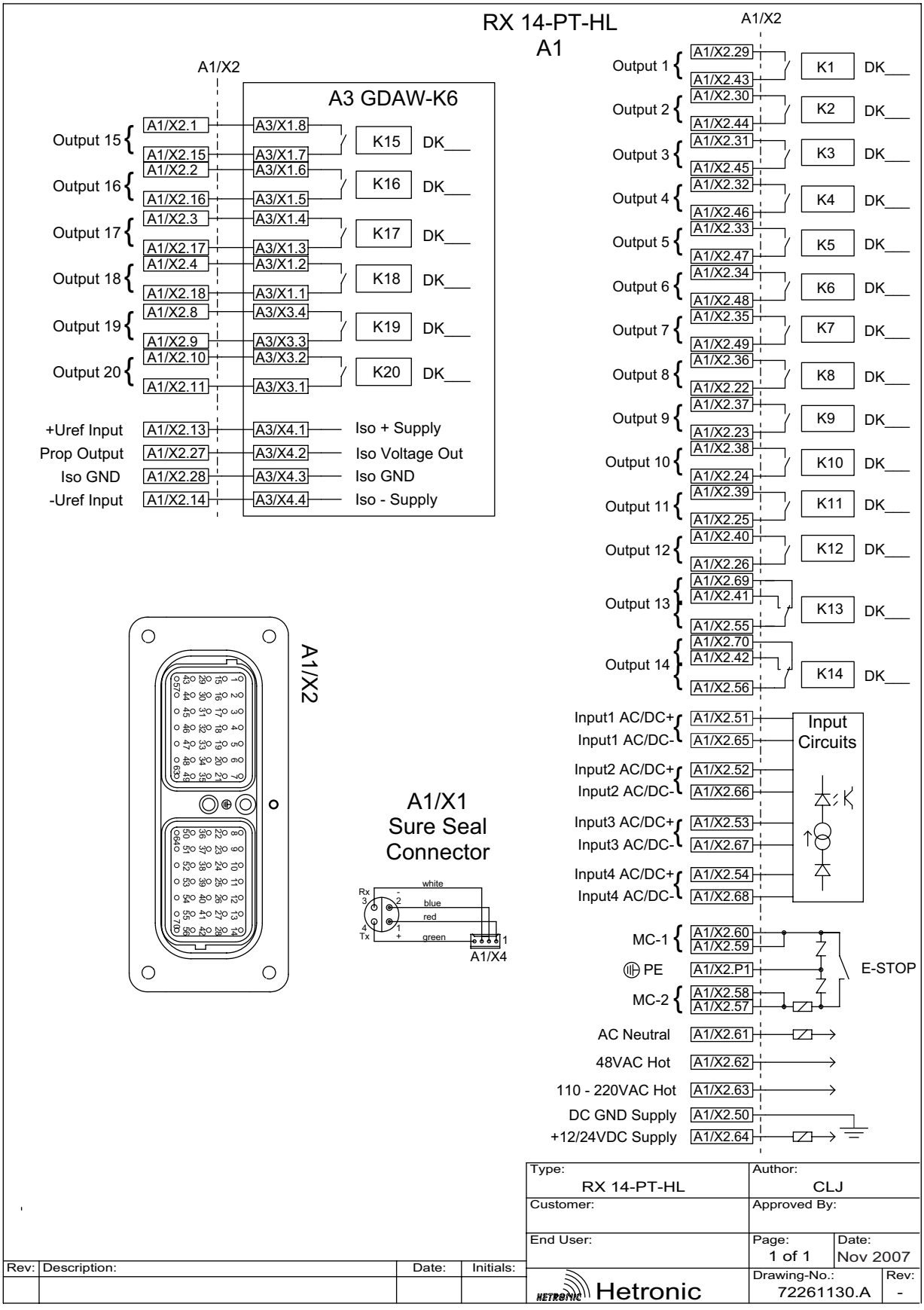

Figure 5: RX 14-PT-HL Connections

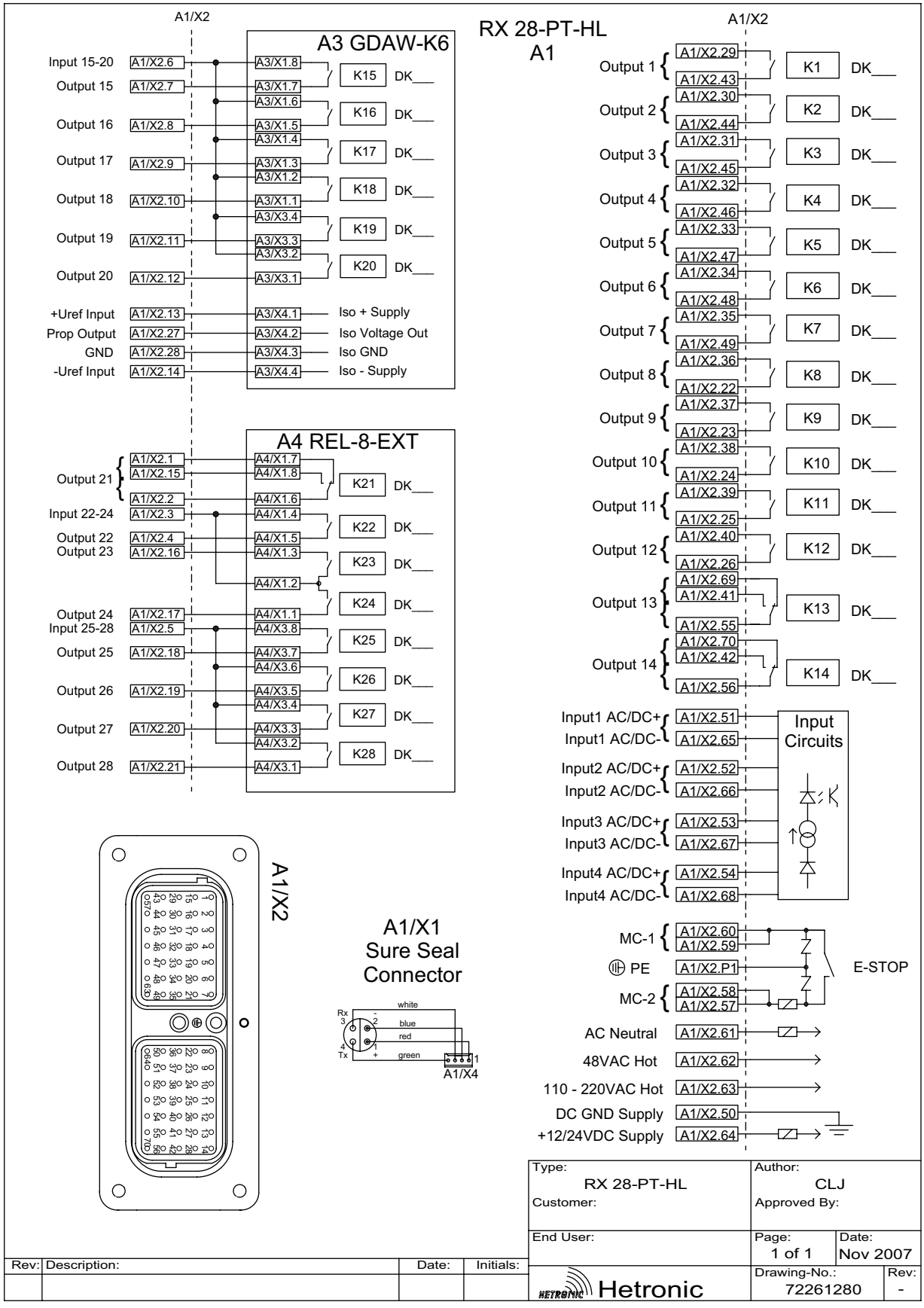

Figure 6: RX 28-PT-HL Connections

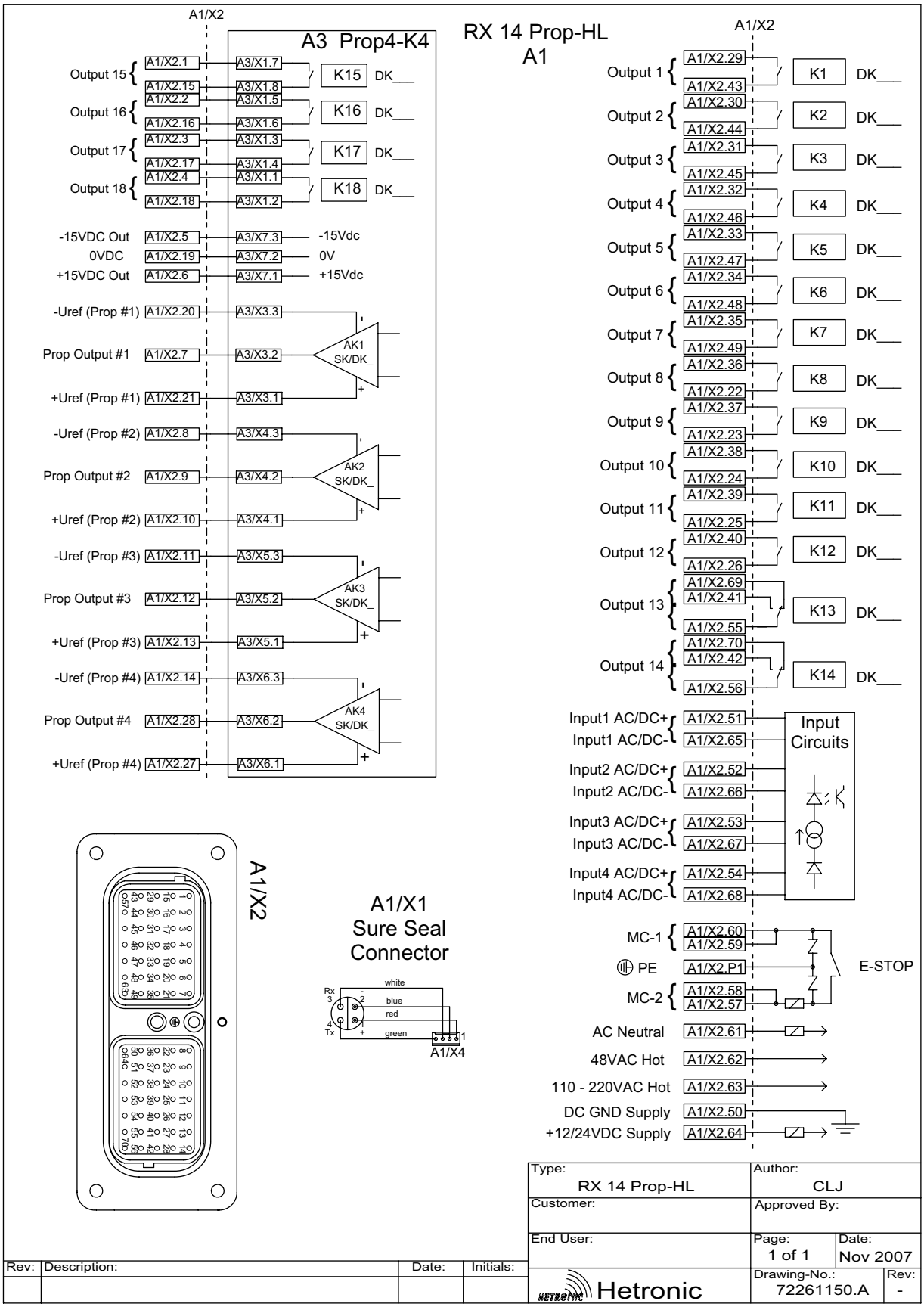

Figure 7: RX 14 Prop-HL Connections

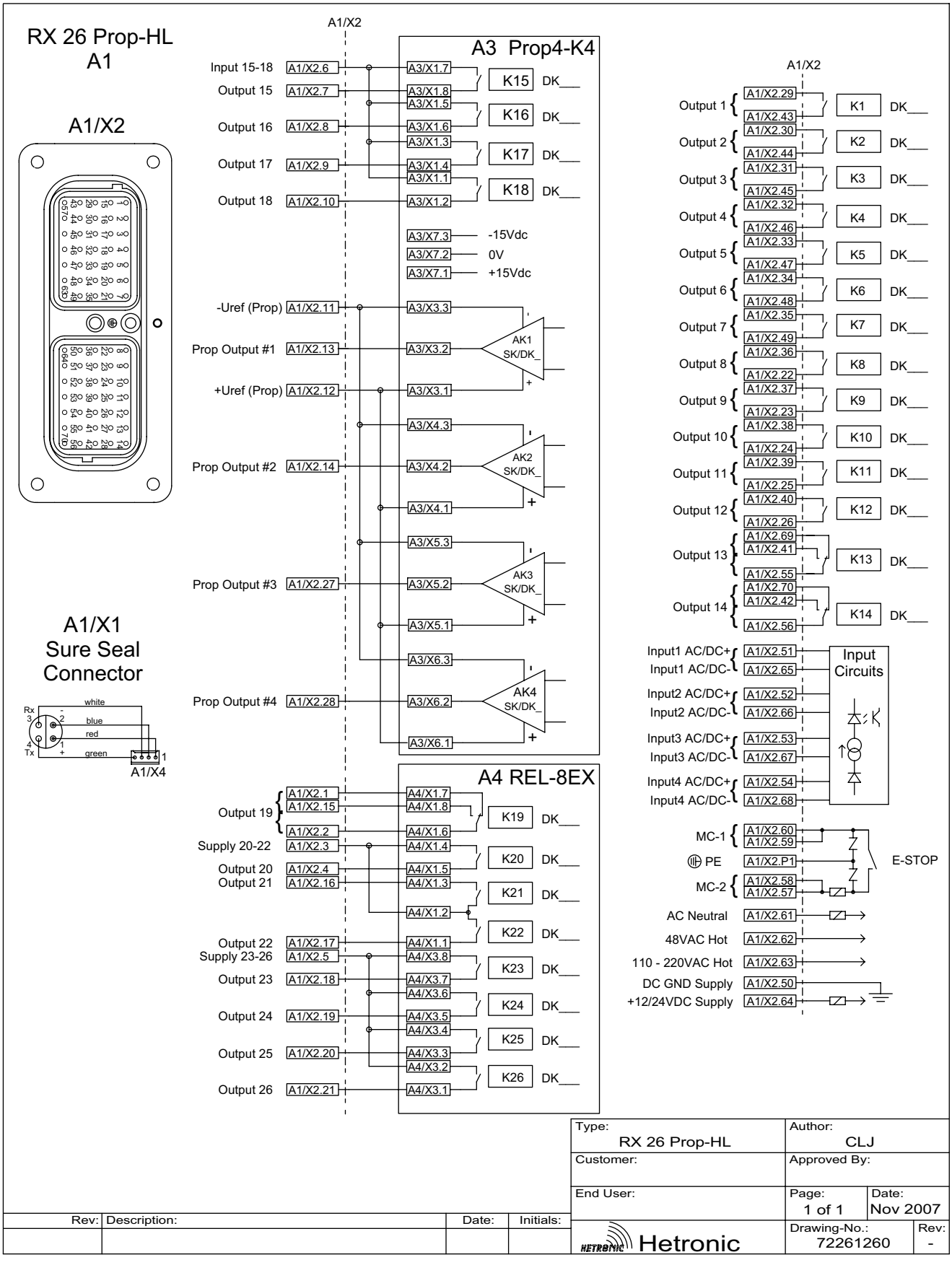

Figure 8: RX 26 Prop-HL Connection

ACCESSORIES

INSTALLING YOUR EXTERNAL ANTENNA (OPTIONAL)

CAUTION: Choose the correct antenna length for your application.

Do not cut, splice, alter or coil your antenna or reception may be adversely affected.

There are numerous configurations of external antennas. The following procedure explains how to install the external antenna commonly used with this receiver.

If you need further information, please contact your supervisor for next steps.

CAUTION: Unscrew antennas by the nut or equipment damage will result.

1. Unscrew the existing antenna (by the nut) from the receiver housing.

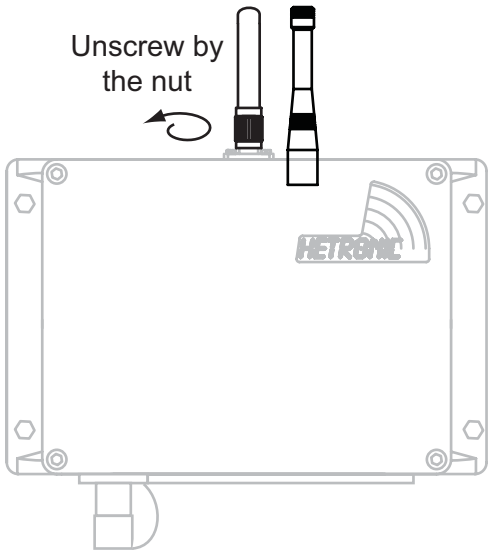

Figure 1: Existing Antenna

NOTE: See the following "Antenna Extension Diagram" for orientation.

2. Screw the antenna (1) to the antenna extension (4). Do not overtighten.
3. Screw the receiver connection (5) to the antenna base (6). Do not overtighten.

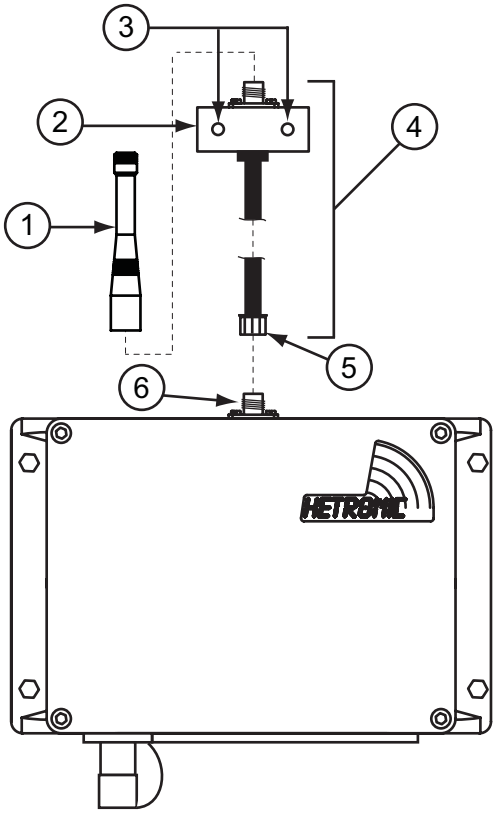

Figure 2: Antenna Extension Diagram

Table 1: Antenna Extension

1	Existing Antenna
2	Antenna Wall Mount Holder
3	Mounting Screw Holes
4	Antenna Extension
5	Receiver Connection
6	Antenna Base

WARNING: Do not route the antenna cable with power or control wiring. Intermittent signal loss will result.

4. Insert the mounting screws through the mounting screw holes (3).
5. Secure the Antenna Wall Mount Holder (2) to the desired mounting surface.

About Expansion Boards (Optional)

The RX14-HL receiver is designed for expansion, and offers up to 16 additional digital and 4 additional proportional outputs in various configurations.

Expansion boards attach to the top of the baseboard. You may attach 1 or 2 expansion boards to the baseboard, depending on how many outputs are needed for your application.

For detailed expansion board specifications, see “Expansion Board Specifications” on page 18.

For expanded configurations, see Table 2 on page 17 and Table 3 on page 17.

The following standard configurations are available to order:

- RX 14-PT-HL
- RX 14 PROP-HL
- RX 22-HL
- RX 30-HL
- RX 26-PROP-HL
- RX 28-PT-H

Table 2: Standard Expanded Configurations (1 Expansion Board)

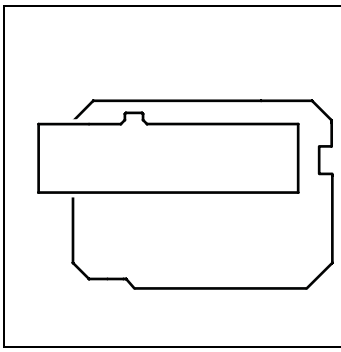

Configurations	Boards Used	
RX 14-PT-HL	RX 14-HL Baseboard	+ GDAW-K6
RX 14-PROP-HL	RX 14-HL Baseboard	+ PROP4-K4
RX 22-HL	RX 14-HL Baseboard	+ REL-8

Table 3: Standard Expanded Configurations (2 Expansion Boards)

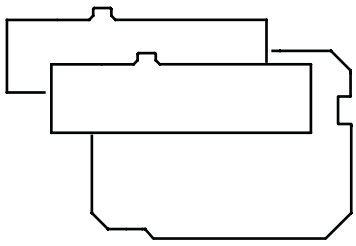

Configurations	Boards Used		
RX 28-PT-HL	RX 14-HL Baseboard	+ REL-8-Ext	+ GDAW-K6
RX 26-PROP-HL	RX 14-HL Baseboard	+ REL-8-Ext	+ PROP4-K4
RX 30-HL	RX 14-HL Baseboard	+ REL-8-Ext	+ REL-8

Table 4: Expansion Board Specifications

Board	Outputs	Rated at:	LED	Prop Input	Prop Output
REL-8	7 Relays (SPST)	8A/250Vac	Yes	--	--
	1 SPDT Relay	8A/250Vac	Yes	--	--
GDAW-K6	6 Relays (SPST)	8A/250Vac	Yes	--	--
	1 Prop Isolated Analog with 1 safety relay	--	No		100 ohm output impedance, 25mA max.
PROP4-K4	4 Relays (SPST)	8A/250Vac	Yes	--	--
	4 Prop Isolated Analog with 1 safety relay	--	No		100 ohm output impedance, 25mA max.
REL-8 Extension	7 Relays (SPST)	8A/250Vac	Yes	--	--
	1 SPDT Relay	8A/250Vac	Yes	--	--

INSTALLING YOUR EXPANSION BOARD (OPTIONAL)

The following procedure explains how to install 1 expansion board. If you need further information, please contact your supervisor for next steps.

WARNING: Installation must be performed by a qualified technician who has been trained by Hetronic and has read and understood all of the safety information provided in the Safety Section of this manual.

NOTE: Expansion boards require mounting and grounding hardware. Use stainless steel or galvanized hardware except where noted.

Before you begin, obtain the desired expansion board and the following hardware:

a. 2 Mounting Screws (M5x25)

b. 2 Tooth Discs (5.1)

c. 2 Mounting Spacers (20x10x18mm)

d. 1 Grounding Screw (SS, M4x12)

e. 1 Tooth Disc (4.3)

f. 1 Grounding Spacer (Brass, 6.35x4.34x6.35mm)

1. Remove the receiver housing cover and identify the following areas on the baseboard:
   - SPI Port
   - Mounting Screw Recesses
   - Grounding Platform

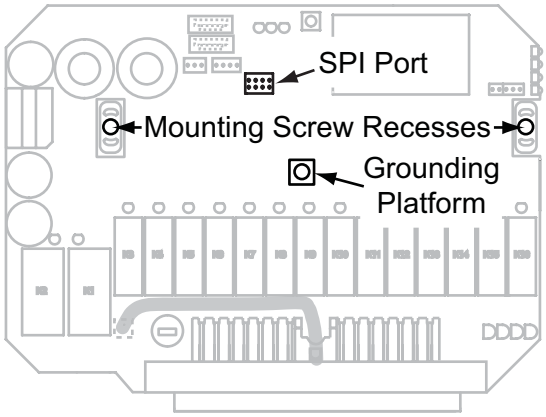

Figure 3: Expansion Board Mounting Locations on the RX 14-HL Baseboard

2. Pick up the mounting screws (a) and slide 1 tooth disk (b) on each mounting screw. Set aside.
3. Pick up the grounding screw (d) and slide on 1 tooth disk (e). Set aside.

4. Center the 2 rectangular spacers (c) in the mounting screw recesses.
5. Center the grounding spacer (f) on the grounding platform.

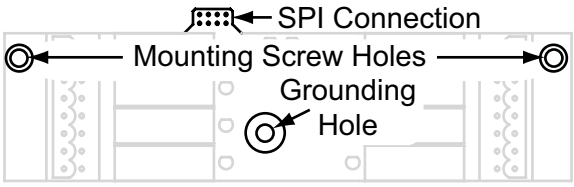

Figure 4: Expansion Board Hardware Locations

6. Insert the 2 mounting screws (a) with tooth discs (b) into the mounting screw holes on top of the expansion board.
7. Insert the grounding screw (d) with tooth disc (e) in the grounding hole in the center of the expansion board.
8. Holding the expansion board parallel to the baseboard, carefully align the SPI connection surfaces.
9. Lower the expansion board so the mounting screws and the grounding screw pass through the spacers and into the threaded recesses.
10. Seat the expansion board into the SPI port.
11. Distributing pressure evenly, carefully tighten the mounting screws and the grounding screw. Do not overtighten.
12. Replace the receiver housing cover and prepare to setup your unit.

NOTE: For setup instructions, see the "H-Link Programming Manual for Pocket PC--Receiver Type: RX 14-HL." Document Number: PRO_RX14_W_0.

TROUBLESHOOTING

If the system does not operate after normal start-up, follow the recommended troubleshooting sequence to help isolate the cause and determine corrective action.

Error Codes are defined by the customer. See Technical Documentation provided with your system for specific Error Codes.

If the Error Code is not listed in your Technical Documentation, please contact Hetronic or your Dealer for more information.

If the system will not respond to the steps below or the Receiver Display indicates a failure, contact the Hetronic Service Department or your authorized dealer.

Table 1: Technical Specifications for All RX 14-HL Baseboard Configurations

Symptom	Probable Cause	Remedy
System will not initialize after normal start-up procedure	E-Stop reset	Push the Start button again. If the system is being initialized from an E-Stop condition, the Start button must be pressed twice - first to clear the E-Stop, then again, to start the system.
	Joystick or paddle lever not in center position	Be sure that all joysticks and paddle levers are in center position when the Start button is activated.
	E-Stop switch engaged	Pull out E-Stop switch. Restart system by pressing Start twice.
	Battery fully discharged	Check battery to ensure a full charge. Replace with fully charged battery if necessary.
	No power to the receiver	Check the diagnostic Display on the side of the receiver to be sure power is applied. Ensure that the system is securely grounded to the negative battery terminal. The Display also indicates normal transmitter communication, interference, and E-Stop conditions.
The transmitter is turned on, but does not transmit (Power LED not flashing)	Battery is discharged	Replace battery with a fully charged battery.
	Coder board fuse	Check fuse and replace if necessary.
	Broken key switch	Check wiring on key switch. Replace key switch, wiring or contact element.
	Coder board failure	Contact Hetronic or your Dealer.

Transmitter is transmitting (Power LED flashing), but machine will not respond	E-Stop switch engaged	Pull out the E-Stop pushbutton and press the Start/Horn pushbutton
	Transmitter out of range	Take the transmitter back into the range of the receiver. Press the Start/Horn pushbutton.
	Receiver power off	Turn on power to receiver.
	Joystick, paddle lever or switch not in center position when transmitter turned on	Ensure that all control devices are in center (neutral) position when the Start button is activated.
	E-Stop failure in transmitter	Check E-Stop pushbutton for damage. Check wiring to contact element for broken or disconnected wires. Repair or replace E-stop pushbutton or wiring.
	Blown fuse in receiver	Check all fuses. Replace if necessary.
All machine motions operate intermittently	Receiver antenna loose or missing	Tighten or replace antenna.
	External antenna (if used) has loose connection, poor grounding or interference	Tighten antenna and ground connection. See "Connecting an External Antenna" Section for operational precautions.
	Connector wiring too close to power wiring	Control wiring must be run separately from power wiring.
	Connector inside receiver is loose	Check all connectors, reseat if necessary.
Some machine motions operate intermittently	Machine motion wiring may be loose.	Check wiring from receiver to plug and from plug to Machine motion actuator.
	Connector inside receiver is loose	Check all connectors, reseat if necessary.
	Connector wiring too close to power wiring	Control wiring must be run separately from power wiring.

SPECIFICATIONS

The specifications apply to all configurations using the RX 14-HL baseboard unless otherwise noted. Weight and output specifications vary per standard configuration.

Table 1: Technical Specifications for All RX 14-HL Baseboard Configurations

Housing Material	PA + 30% Glass Fill
Environmental Protection	IP 65 (Exceeds Nema 12/13)
Dimensions	Length: 9.7 in., 246 mm Height: 11.7 in., 298 mm Depth: 4.5 in., 115 mm Note: These dimensions include the vibration mounts, antenna and sure seal connector.
Antenna	External
LED Diagnostics	Power/operation, TX signal reception, E-stop error, TX signal type
Inputs	4 On/Off isolated inputs at 12-24 Vdc. Inputs are fully programmable.
Frequency Range	419 MHz, 429 MHz, 434 MHz, 447 MHz, 458 MHz, 480 MHz, 868 MHz
RF Unit	Type CS synthesized with multiple frequencies
Typical Operating Range	Up to 300 ft., (100 m)
Safety Address	20-bit (over 999,999 individual possibilities) Address Module (ADMO)
Safety	Active and passive Stop function Parity & Checksum
Temperature Range	-11 to +158 degrees F (-25 to +70 degrees C)
Humidity Range	0 - 97% maximum non-condensing
Response Time	Less than 100 msec.
Baud Rate	Up to 9600 baud (selectable via H-Link)
Standard Features	Fully programmable via Pocket PC with H-Link modem Built-in quick disconnect connector Vibration mounts
Standard Options	MFSHL-232 serial link for H-Link programming

STANDARD CONFIGURATIONS

Standard Configurations	Weight	Functionality		Includes the RX 14-HL baseboard and the following expansion boards			
		Inputs	Outputs	REL-8	GDAW-K6	PROP4-K4	REL-8 Extension
RX 14-HL (Baseboard)	1.7 kg (3.8 lbs)	4 Digital	14 Digital	--	--	--	--
RX 14-PT-HL	1.8 kg (4.0 lbs)	4 Digital	20 Digital 1 Prop.		X		
RX 14-PROP-HL	1.8 kg (4.0 lbs)	4 Digital.	18 Digital 4 Prop.			X	
RX 22-HL	1.8 kg (4.0 lbs)	4 Digital	22 Digital	X			
RX 30-HL	1.9 kg (4.2 lbs)	4 Digital	30 Digital	X			X
RX 26-PROP-HL	1.9 kg (4.2 lbs)	4 Digital	26 Digital 4 Prop.			X	X
RX 28-PT-HL	1.9 kg (4.2 lbs)	4 Digital	28 Digital 1 Prop.		X		X

FORMS AND ADDITIONAL INFORMATION

INSTALLATION AND SAFETY DATA SHEET

This form must be completed and signed by the person responsible for installation of this radio remote control system.

Hetronic assumes no responsibility for the correct installation of the radio remote control system.

The equipment operator must ensure that the radio remote control system and the machine operate correctly together.

The operator must also ensure that all safety devices and features are in place and operating correctly.

The operator is responsible for understanding and following all safety precautions in this and other applicable documentation.

MACHINE DATA

Manufacturer	
Model Number	
Serial Number	
Year of Production	
Radio Remote Control Data	
Manufacturer	Hetronic
Model	
System/Transmitter Type	
Transmitter Production Number	
Receiver Production Number	
System Number	
I/We installed the radio remote control system, performed the safety test and inspected the machine. The appropriate instructions and rules of this machine type are followed.	
Place	
Date	
Company	
Name of Installation Technician	
Signature	

AWG METRIC CONVERSIONS

AWG	Metric Equivalents	
	mm sq.	Cable Size mm sq.
20	0.52	0.75
18	0.82	1.0
16	1.32	1.5
14	2.1	2.5
12	3.3	4
10	5.32	6
8	8.5	10

GLOSSARY

Acoustic signal	A buzzer or other sound intended to be heard as an alert
Analog signal	Proportional - stepless or infinite control
Belly box	A transmitter that is secured to the front of the operator’s body by a belt, strap or breastplate/harness.
Coder	Converts parallel signals into a serial data message
Decoder	Coverts a serial data message into parallel signals
Digital signal	On/off control
Latching control	The function activates when the control is pushed and released. The function stays on until the control is pushed and released again.
Mainline contactor	The primary power supply contactor to the machine controls.
Maintained control	The function activates when the control is placed in the ON position. The function stops when the control is placed in the OFF position.
Momentary control	The function activates when the control is placed in the ON position. The control must be held in place to stay ON. When the control is released, it returns to the OFF position and the function is stopped.
Proportional control	A multi-speed function control that goes faster as the control is pressed further.

ABBREVIATIONS

A/D	Analog to digital conversion	MOV	Metal Oxide Varistor type of surge suppressor
AK	Analog channel (German: Analog Kanal)	mW	Milliwatt
AMP	Ampere	NiCd	Nickel Cadmium
AWG	American Wire Gauge	NiMh	Nickel Metal Hydrite
BPS	Bits Per Second	PLC	Programmable Logic Controller
CPU	Central Processing Unit	PLL	Phased Locked Loop
DPST	Double Pole Single Throw	PTO	Press to operate
DPDT	Double Pole Double Throw	PWM	Pulse Width Modulation
DK	Digital channel (German: Digital Kanal)	R/C	Resistor/Capacitor type of surge suppressor
EMC	Electromagnetic Compatibility	RF	Radio Frequency
EMI	Electromagnetic Immunity	RMS	Root Mean Squared
EEPROM	Electrically Erasable Programmable Read-Only Memory	Rx	Receiver
EPROM	Erasable Programmable Read-Only Memory	RxD	Receiving data
FM	Frequency Modulation	SMD	Surface Mount Device
GND	Ground	SMT	Surface Mount Technology
HF	High Frequency	SPST	Single Pole Single Throw
KHz	Kilohertz	SPDT	Single Pole Double Throw
LED	Light Emitting Diode	TTL	Transistor Logic
LTO	Lift to operate	Tx	Transmitter
mAh	Milliampere hours	TxD	Transmitting data
mA	Milliampere	Ub	Operating power
msec	Millisecond	VAC	Volts Alternating Current
MHz	Megahertz	VDC	Volts Direct Current

www.hetronic.com

© 2007 Hetronic

All rights reserved. No part of this publication may be reproduced, transmitted, transcribed, stored in a retrieval system, or translated into any language in any form by any means without the written permission of Hetronic.

Technical information subject to change without notice.

Hetronic reserves the right to discontinue, make changes to, and add improvements upon its products at any time without public notice or obligation. Hetronic disclaims liability for any claims or damages, whether regarding property, personal injury or death arising out of the use of unauthorized replacement parts or service.

Betriebsanleitung EX-Sicherheitsfunkfernsteuerungen

Operating Manual Explosion-Proof Safety Radio Remote Controls

© 2012 HETRONIC Germany GmbH

Page

1. Introduction 28
1.1 Operating Manual
1.2 How to use this Manual
1.3 Production and System Numbers

2. Safety Precautions 29
2.1 Safety of this Radio Remote Control System
2.2 Safety Information
2.3 Authorized Operators
2.4 Sources of Risk
2.5 Safety Precautions in the Working Area
2.6 Protection Devices
2.7 In Case of Emergency

3. Protection Device 31
3.1 Transmitter
3.2 Receiver
3.3 System

4. Installation 32
4.1 Positioning of the Receiver Unit
4.2 Installation of the Output Wiring
4.3 Proper Installation of the Receiver Unit
4.4 Mounting Antennas

5. Check before Operation 33
5.1 Note for Operation
5.2 Visual Inspection
5.3 Prior to Operation
5.4 Functional Test of the Stop Button

6. Startup Procedure 34
6.1 Startup Procedure for Transmitters WITHOUT Key Switch
6.2 Startup Procedure for Transmitters WITH Key Switch
6.3 Receiver Status Display

7. Operation of HL Systems 35

8. CAN Handheld Control 36
8.1 Connecting the Handheld Control
8.2 Plug Connection
8.3 Direct M Screw Connection

9. Cable Control System 37
9.1 Use of the Cable Control System
9.2 Approved Control Cables
9.3 Connecting the Control Cable

Page

10. Battery Charger and Rechargeable Batteries 38
10.1 Replacing and Charging Rechargeable Batteries
10.2 Display and Error Messages of the Battery Charger
10.3 Battery Charger MINI UCH-2-AC-EX / MINI UCH-2-DC-EX (Zone 1)
10.4 Rechargeable Battery MINI-EX___ (I/IIB/IIC)(Zone 1)
10.5 Battery Charger MINI UCH-2-AC-EX2 / MINI UCH-2-DC-EX2 (Zone 2/22)
10.6 Rechargeable Battery MINI-EX2___ (IIB/IIC) / MINI-EX22 (Zone 2/22)

11. Diagnostics 41

12. General Technical Data 43
12.1 System
12.2 Transmitter
12.3 Receiver
12.4 EX Zone 1 Receivers in Various Models
12.5 Handheld Control
12.6 EX Rechargeable Battery
12.7 EX Battery Charger
12.8 Technical Data Sheets
12.9 General

13. Maintenance, Guarantee, Disposal 47
13.1 Maintenance
13.2 Guarantee and Warranty
13.3 Disposal
13.4 Qualified Persons according to the Ordinance on Industrial Safety and Health
13.5 Spare Parts

14. Abbreviations and Definitions 48
14.1 Abbreviations
14.2 Definitions

15. Installation and Safety Test Declaration 49

1. Introduction

1.1 Operating Manual

We are glad that you have chosen a HETRONIC quality product. Our safety radio remote control systems offer maximum quality, reliability and innovation.

Do you want to know more about company HETRONIC?

Just visit our website!

Read the manual of all system components carefully in full before operating the system. The content will make yourself familiar with the safety instructions and the controls during standard operation and maintenance. Keep the manual in a place where the operator can access it at any time.

1.2 How to use this Manual

- This manual is part of the product.
- This manual has to be retained as long as the system is operated.
- This manual has to be passed on to every future owner or user of the system.
- Please assure, that each available appendix is attached to the manual, f.e. technical data sheet, EX-Declaration of Conformity

1.3 Production and System Numbers

When you contact your dealer or HETRONIC partner for repair work, maintenance or spare parts, please keep the system numbers of the transmitter and the receiver ready. You will find the numbers on the type plate on the outside of the transmitter and receiver housing.

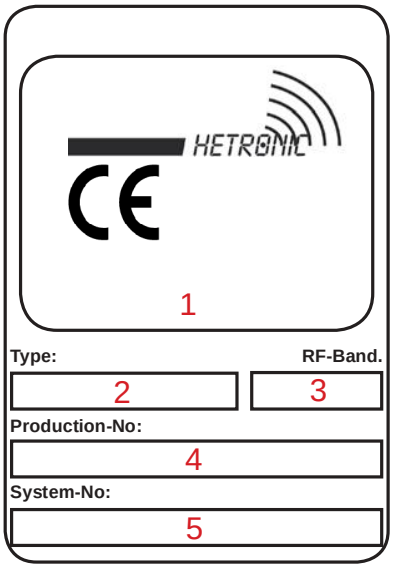

Type Plate – Labeling and meaning

1. Approvals
2. Transmitter and receiver type
3. Frequency and RF type
4. Production number
5. System number

Explanation for item 5. System number
Each system number consists of 11 digits. Below you will find the meaning of the particular digits from left to right:

1 04 09 178000

1	Country Indicator
04	Month of production
09	Year of production
17 8000	System number

		Country Indicator	Month	Year	System number
A	H-D (Germany)	1	04	09	100001
B	H-M (Malta)	2	04	09	100001
C	H-US (U.S.A.)	3	04	09	100001
D	H-I (Italy)	4	04	09	100001
E	H-A (Asia)	6	04	09	100001
F	H-CEE (Austria)	7	04	09	100001

z. B. A = 10409100001 = produced in Germany, April, 2009 # 100001
z. B. B = 70409100001 = produced in Austria, April, 2009, # 100001 usw.

Please notice the attached drawings and the respective technical data sheets on our website!

The drawings will show the specific version of your radio remote control.

2. Safety Precautions

2.1 Safety of this Radio Remote Control System

This radio remote control system is equipped with both, electronic and mechanical protection devices for the functional safety, fault-free operation and interference resistance. Control commands from other transmitters cannot be processed or transmitted to other receiver units, as all information from the transmitter and the receiver is enclosed.

2.2 Safety Information

Using a radio remote control system allows the operator for more mobility in his working area and increased precision. However, the user and the maintenance staff always have to be attentive, in order to access all these advantages. The operator always has to keep an eye on the machine running, as this is necessary to assure a proper and safe operation of the radio remote control system.

This sign indicates important information relevant for the explosion protection of this control system.

2.3 Authorized Operators have to be instructed according to the industrial safety regulations!

Always check the operating instructions of your machine to receive more important information!

The operator has to assure that unauthorized persons cannot operate the transmitter. For this, he has to turn off the key switch, remove the key or the rechargeable battery and store the transmitter in a lockable location. This is the only way to prevent undesired use or misuse by unauthorized persons. The operator must have access to all operating instructions, which are necessary for the proper operation of the machine to be controlled. If the system is not used by the buyer himself, if it was lent, rented or sold, please provide this operating manual and the required safety instructions before operation.

Before operating this radio remote control, the operator has to read and fully understand all instructions of every chapter of this manual.

2.4 Sources of Risk

The system is designed for permitting machines to be controlled by radio remote control. However, control commands are also transmitted outside your range of vision and through or around obstacles.

Therefore:

- Switch the transmitter off and pull the key from the key switch, if it is not in use.
- Remove the rechargeable battery, if your transmitter does not have a key switch.
- The protection devices may not be modified or removed.
- The transmitter may not be operated without a corresponding antenna. This antenna is an approx. 65 mm long Miniflex model antenna, supplied by HETRONIC (can be seen on imprint „440-470“)
- If you carry the replacement battery into the EX area, it must be carried with you.
- The antenna of the EX transmitter may only be replaced outside of the explosion-proof area.
- **ATTENTION! In case of non-compliance, warranty claims according to the Civil Code (BGB) and the Commercial Code (HGB), and the duty of replacement according to the Product Liability Act are excluded.**

2.5 Safety Precautions in the Working Area

Make sure, that there are no risks for the operator within the working area of the radio remote control. Ensure that there are no obstacles in the working area and that dangerous situations affecting the operational safety are avoided.

Make sure, you position yourself securely. Before each use of the radio remote control system, ensure that nobody is within the working area or the swiveling range of your load. If a carrying strap is provided for your transmitter, it has to be used.

System operators are obligated to:

- keep the systems in proper condition.
- operate the systems properly.
- constantly monitor the systems and to check whether the explosion protection is still effective.

2.6 Protection Devices

All industrial HETRONIC radio remote control systems are equipped with an emergency stop button, located on the control panel of the transmitter.

The radio remote control system is provided with protection devices, which are activated automatically in the following cases:

- Radio interference within the working area, affecting the frequency range of the HETRONIC radio remote control.
- Exceeding the range of the transmitter.
- Protective shroud, hoop guard, or underlying function keys. These safety devices protect the control elements from unintended activation, thereby preventing unintended control commands.
- The transmitter and batteries have an intrinsically safe design (safety class „i"). The transmitter has an anti-static surface (surface resistance between $10^1\Omega$ and $10^9\Omega$). The non-anti-static projected surface of the batteries is < 20cm² except for ERGO-F and MINI transmitters. Unlike the standard batteries, the EX batteries have a black housing with gray/red type plate for preventing operation with incorrect batteries.

In these cases, the radio remote control will be stopped immediately and the output signals of the receiver are interrupted.

2.7 In Case of Emergency

1 Press the red stop button.
2 Turn the key switch to position „OFF".
3 Wait until the machine has stopped.
4 Proceed as instructed in the operating manual for your machine.

Unlock stop button by turning clockwise

Push-pull stop

Stop button

Momentary stop

Momentary stop

3. Protection Devices

3.1 Transmitter

Key switch:
Almost all HETRONIC transmitters are equipped with a key switch. This key enables the operator to switch off the transmitter, when it is not in use. Furthermore, the key switch prevents undesired use or misuse by unauthorized persons and is a helpful device in case of maintenance work on the machine.

Self test:
After turning the key switch, the system performs a self test. 2 acoustic signals will confirm a positive test result. When the green LED is flashing the transmitter is ready for operation.

Button „start/horn" – Neutral position:
After the self test, the transmitter has to be started by pushing the start/horn button. This will activate the receiver. All control functions have to be in neutral position, in order to start the system. If one of the control functions is activated, the system cannot be started. This protective measurement ensures that machine motions cannot be activated accidentally. You cannot skip the start button by destructing it or shutting it down. If the start button is pushed during the self test, the system will not start.

Stop button:
The transmitters are equipped with a tamper-proof stop button. The stop signal is transmitted as a digital signal. Furthermore the stop button status is monitored during the self test when the system is started. If the stop button is activated during the startup procedure, the system will not operate. The stop button is the most important protection device of the radio remote control. It ensures that the operator can immediately stop the machine during operation.

Battery monitoring:
The transmitter´s electronics permanently monitors the battery status. If the battery voltage is low, an optical or acoustic signal for about 30 seconds will alert the operator. Then the transmitter automatically sends out a stop signal and brings the machine into a safe state. Please note that advanced low voltage recognition (approx. 10 minutes) is also available.

Mechanical construction:
A mechanical guard on the transmitter protects the buttons and joysticks from shocks and dropping. For this purpose you also use the ergonomically designed carrying devices. The lightweight, fiber-reinforced PC transmitter housing meets the requirements of daily operation.

3.2 Receiver

Self test:
The software runs a self test after the receiver is powered. If the self test is negative, the receiver will not start and remain in a safe state.

Emergency stop circuit:
The receiver includes a specific emergency stop circuit. Due to the redundant design it functions self-monitoring.

STOP:
When the receiver receives the emergency stop signal from the transmitter:

- the internal power supply to the output modules will shut down.
- a fail-safe, self-monitoring emergency stop output relay will be activated.

The response time for active stop is < 450 ms.

Power supply:
The receiver has its own electronic power supply, which powers all receiver modules.

3.3 System

System number:
Each radio remote control has its own address. It ensures that only the designated transmitter can activate the corresponding receiver.

Radio interference:
In case of radio interference, the system will switch into a safe mode after 450 ms.

Software:
After the turn-on procedure, the software of the system performs a system test, where all safety devices are checked.

4. Installation

4.1 Positioning of the Receiver Unit

When mounting the receiver, ensure that the antenna has maximum radio reception, in order to have a radio remote control that functions properly. Metal parts of the machine to be controlled in the immediate vicinity of the receiver unit impair a proper radio reception. If the receiver is to be installed inside a metal housing or in a shielded area, an appropriate extension and an adequate antenna have to be used in order to achieve a suitable operating range. Contact HETRONIC to get more detailed information. Furthermore the receiver has to be mounted in a safe and easily accessible place, in order to facilitate future installation and maintenance work. Install the receiver unit with the cable connections downwards.

ATTENTION!

- **The installation of the receiver unit on the electric system of the machine may only be performed by a qualified person, familiar with the electrical circuitry of the machine and the technical features of the radio remote control.**
- **Both, the transmitter and the receiver have to be powered down during installation work.**
- **All instructions, concerning the health of persons within the immediate vicinity of installation, all valid local regulations and fire regulations have to be observed strictly.**
- **HETRONIC will not accept liability or provide a guarantee in the event of personal injury or damage to property, resulting from improper or negligent use of the remote control or non-compliance with the regulations or instructions.**

4.2 Installation of the Output Wiring

Switch the power supply of the machine off before attaching the voltage supply of the receiver.

Authorize a qualified technician to perform the wiring. Improper wiring may cause serious system damage and may void your guarantee. The output wiring has to be installed according to the connection diagram of the machine and the radio remote control. Only use contacts of good quality, to ensure a proper electric contact. You will find detailed information about the receiver wiring inside the cover of the receiver or in the enclosed documentation. The power supply and the ground wire are extremely important. They have to be connected to fail-safe electrical connections.

If this control is equipped with a receiver for the EX area, then please observe the additional operating manual and operating regulations provided with the receiver for connecting and startup.

4.3 Proper Installation of the Receiver Unit

(See drawing below)

When mounting the receiver unit ensure that no big metal surfaces shield the external antenna.

4.4 Mounting Antennas

Important! To guarantee a troublefree operation, follow the instructions given below to mount the antennas.

General:

- Only antennas that have been approved by HETRONIC may be used.
- Neither the receiver nor the transmitter may be used without antenna.

For Feedback-Systems:

- Keep a minimum distance of 3 to 6 ft. between the receiver antenna and the transmitter antenna.
- Mount the receiver antenna horizontally, the transmitter antenna vertically.

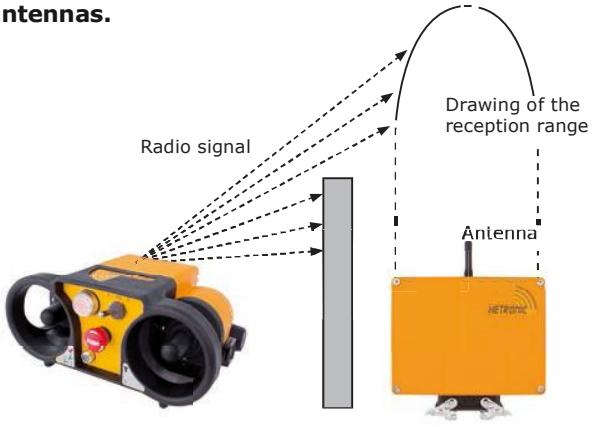

5. Check before Operation

5.1 Note for Operation

Have you read and understood the operating manual, in particular section 2 „Safety precautions" and section 3 „Protection device"? Please do not use the device until you have done so!

5.2 Visual Inspection

ATTENTION!
Always check the transmitter for damages each time before use!

- Are all protection devices present and fully functional?
- Are there any broken parts?
- Are all rubber sleeves and the pushbutton caps in good order? (**transmitter**)
- Are all connections and cables in good order? (**receiver**)

ATTENTION!
Never operate a radio remote control that shows any kind defects! All defects have to be repaired by a qualified technician before operation!

The EX protection of this control is only fully guaranteed if the housing and all the control elements mounted on it are free of mechanical damage. At least protection class IP 54 must be ensured.

5.3 Prior to Operation

- Make sure, the system has been installed completely.
- Make yourself familiar with all safety precautions of the operating manual.
- Notice all safety precautions of the operating manual and check the control functions and the operation of machine and radio remote control.
- If the transmitter is not operated, turn it off and store it in a safe place, inaccessible for unauthorized persons.
- Always check that the stop function of the machine and the radio remote control work perfectly.
- If the machine does not respond correctly, immediately stop operation. Turn off the transmitter and remove the batteries. Immediately contact a qualified person.
- Remove the batteries of the transmitter and disconnect the power supply of the receiver before any maintenance work is done.
- Installation, adjustment and maintenance may only be performed by authorized technicians.
- Only use original HETRONIC spare parts.

ATTENTION!
In case of problems, turn off the machine immediately. Never operate a machine if the emergency stop does not operate properly. In case of disregarding this rule there is risk of personal injury or collateral damage. Performing work steps not complying with this operating manual may lead to the loss of your operating license and result in the expiration of your guarantee!

5.4 Functional Test of the Stop Button

ATTENTION!
Check the emergency stop button each time before operating the radio remote control system!

- Make sure, that the transmitter is either operated with completely charged HETRONIC batteries.
- Put the key into the key switch on the transmitter. (only for transmitters with key switch)
- Start the transmitter as described in 6.1 or 6.2.
- Now check if the stop button is working properly. Proceed as follows:
  (1) Push the stop button on the transmitter.
  (2) Watch the flashing of the green LED.
  (3) If stop button is activated = fast flashing
  (4) If stop button is released = standard flashing
- If the stop button works properly – you may start the system.
- If the stop button does not work properly, the system has to be inspected by a qualified person.
- Now your radio remote control is ready for operation. Activate any of the functions using the transmitter and check if the machine operation immediately stops if the function is interrupted

6. Startup Procedure

6.1 Startup Procedure for Transmitters WITHOUT Key Switch

1. Insert a rechargeable battery.
2. The transmitter will be started by activating the green start button.
3. Transmitter with inching operation will be started by activating a function button.
4. The green LED has to flash.
5. If the function button is released, the motion will be stopped.
6. If the red LED is flashing, the rechargeable battery has to be changed (Low voltage test optionally).

MINI

ERGO F

6.2 Startup Procedure for Transmitters WITH Key Switch

1. The key switch is used to start the transmitter.
2. After the startup procedure, you should hear 2 short acoustic signals.
3. After this self test, the green LED on the transmitter starts flashing.
4. The stop button has to be checked every day (see section 5.4.).
5. Press the green start button in order to start the system. The layout of your transmitter may vary from the pictures below. Please refer to your drawings for information about the function of the buttons.
6. Attention: Control functions which are not in neutral position prevent the startup!

Green start button
and key switch

Green start button
and key switch

Red stop button

6.3 Receiver Status Display

1. Compact version with vision panel
   The LED Display is on the right side of the housing.
2. Compact version without vision panel
   The LEDs are only visible when receiver lid opened.
3. Modular Version
   There are 3 LEDs on both the decoder and the emergency stop decoder

LED explanation

Yellow	=	Operation
Green	=	Radio link
Red	=	Failure
Yellow	=	Normal (stop condition)

1

2

3

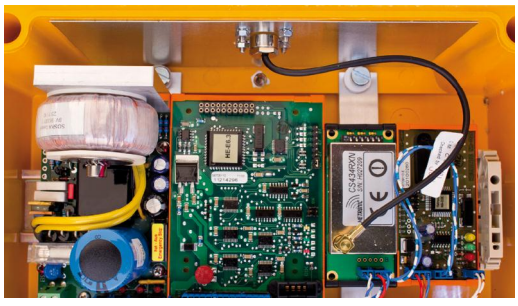

7. Operation of HL Systems

H-Link

H-Link is a technology, which enables the operator to access the configuration of a HETRONIC radio remote control system, without opening it! The wiring and assignment is replaced by a wireless data exchange between HETRONIC systems and an H-Link configurator. Via H-Link you may set functions as system address, transmitter frequency channel, automatic shutdown, interlocking, output adjustment and many more. Refer to the Ergo F operating manual to get more information. After the initial programming by HETRONIC, you can set the frequency channel for transmitter type ERGO F without using H-Link.

The system may only be programmed outside of the EX area by an authorized expert.

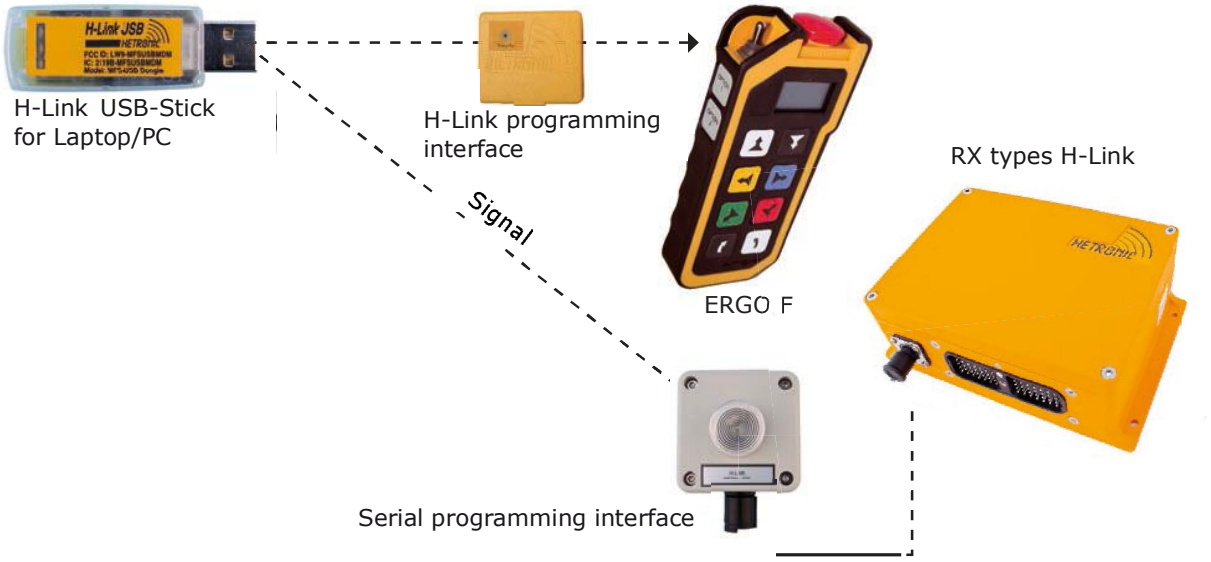

8. CAN Handheld Control

8.1 Connecting the Handheld Control

The handheld control is connected either directly to a machine using an M screw connection or using a plug connection. Via this cable, the handheld control is provided with an intrinsically safe power supply with a maximum voltage of 12.8 VDC. It exchanges data with the machine using a CAN bus interface. More details on hooking up the handheld control to the machine using the cable must be acquired from the corresponding system certificate.

8.2 Plug Connection

If the handheld control has a plug connection, make sure that only suitable, approved connecting cables are used. The connecting cable must be properly secured after being attached. If the connecting cable is not connected, the plug connection must be protected with the corresponding sealed cable end.

8.3 Direct M Screw Connection

If the handheld control is connected to the machine directly with a cable via an M screw connection, please make sure that the screw connection has been properly tightened. Also ensure that the cable doesn't shake anywhere and that the minimum bending radii are adhered to.

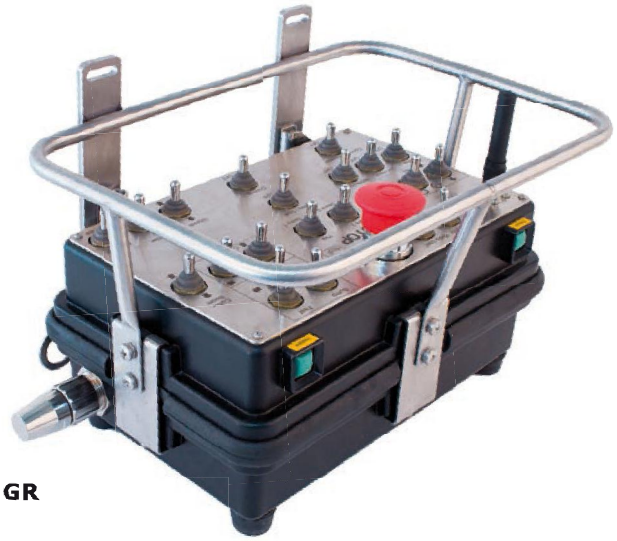

GR

9. Cable Control System

9.1 Use of the Cable Control System

HETRONIC remote control systems can be equipped with an optional cable control system. This enables the system also to be operated where it is not possible to establish interference-free radio communica tions due to external high-frequency sources of interference, or at locations or times in which the use of radio communications is not allowed.

The handheld transmitter is equipped with a plug connection for use with control cable. Only the designated type of control cable may be connected. The plug connection is protected to prevent any energy from being released which may ignite a potentially explosive mixture, even when linking the contacts.

9.2 Approved Control Cables

The handheld transmitter may only be used with a control cable which has been approved for use with this particular transmitter. The plug of the control cable must bear the imprint „Belongs to Transmitter xxx-K-L-EX-yyy/xxx-K-L-EX2-yyy/xxx-K-L-EX22", with the values for X and Y derived from the following table.

xxx	yyy
NOVA-L	I
NOVA-XL	IIB
GL	IIC
GR	
EURO	

Only control cables with max. 25m and the label „Belongs to _____-K-L-EX-IIC" can be connected to transmitter model ...EX-IIC.

Only control cables with max. 90m and the label „Belongs to _____-K-L-EX-IIB" or „Belongs to _____-K-L-EX-I" may be connected to transmitter models …EX-IIB and … EX-I.

9.3 Connecting the Control Cable

Procedure:

- The end of the control cable, whose plug has not contacts, must be connected using a suitable counterpart piece to the receiver unit.
- The handheld transmitter must be switched off (key switch in off position).
- The blind cap of the plug connection on the transmitter must be removed in order to operate the remote control system using the cable.
- Now the end of the corresponding control cable which has plug contacts is plugged into the socket of the plug connector on the handheld transmitter and locked.
- By plugging in the control cable, the handheld transmitter is switched to cable operation provided it is equipped as a transmitter, i.e. the RF part of the transmitter is switched off.
- Now you can switch on the handheld transmitter again and your machine will be controlled via the control cable.

10. Battery Charger and Rechargeable Batteries

10.1 Replacing and Charging Rechargeable Batteries

The batteries have to be fully charged before startup!
Place the charger in a clean and dry location. Connect the charger, depending on the type, to a permanent power supply.
Insert the empty battery into the charger and the charging process will start automatically.
The charging time is approx. 2 – 4 hours (depending on battery type). Ready: (green) LED has to flash.
Battery chargers of HETRONIC are equipped with a charging state recognition. When the batteries are fully charged, the battery charger automatically switches over to trickle charging.

NOTE!
In order to avoid down times, we recommend to always have a fully charged battery pack ready.

Changing the Rechargeable Battery

Ensure that there is no dirt in the battery compartment, as this can result in contact interference. The electronic system of the transmitter continuously monitors the battery voltage. When this falls below a certain value, either the LED on the operation display of the transmitter begins to flash red or you hear an acoustic signal, depending on the transmitter design. The system then shuts down approx. 10 minutes later.

Proceed as follows:
- Bring the machine into a secure state as soon as possible.
- Use the key switch to switch off the transmitter (Position 0).

HETRONIC batteries:
- Remove the empty battery, press the edge lips forwards and withdraw upwards.
- Get a charged battery and insert it in the designated spaces in the battery compartment of the transmitter with the two contacts forward and the two guide supports backward.
- Then press the battery toward the battery holding compartment until it is completely engaged.

Model MINI-EX-___ batteries may only be used as power supplies for explosion-proof equipment within a potentially explosive area if they are secured against falling out of the battery compartment.

You must therefore ensure that the battery is correctly engaged when inserted and has a secure fit.

Charging the Rechargeable Battery

Make sure that the battery charger is intended for charging explosion-proof equipment and that you are located outside of a potentially explosive area or in a specially designated space for charging batteries.

10.2 Display and Error Messages of the HETRONIC Battery Charger

LED-Display of the battery charger

- Charging process is running: yellow LED[1] flashing
- Charging process completed: green LED flashing [2], trickle charging is running

Error messages of the battery charger

- No LED is flashing: rechargeable battery is damaged
- Yellow LED [1] is blinking: short circuit in the battery block

In both cases the battery may no longer be used!

ATTENTION!
Only use original HETRONIC batteries! Failure to observe may result in explosion hazard. Escaping chemicals and flying parts may cause irreparable damages.

NOTE!
Rechargeable battery packs are to be treated as hazardous waste and have to be disposed properly.
Defective rechargeable battery packs can also be disposed directly through HETRONIC.

Zone 1 **Zone 2/22**

Available Plug Versions for HETRONIC Charger

10. Battery Charger and Rechargeable Batteries

10.3 Battery Charger MINI UCH-2-AC-EX bzw. MINI UCH-2-DC-EX (Zone 1)

The polarity of the battery charger is reversed in order to charge batteries with type MINI-EX-___. For this reason, never try to charge batteries which do not have this design, as otherwise the battery charger and the battery will be destroyed.
In order to achieve the longest possible service life for your batteries, they should only be charged again when the low-voltage indicator of the respective transmitter emits an acoustic or visual signal, depending on the design.
MINI UCH-2-AC-EX and MINI UCH-2-DC-EX battery chargers may only be operated outside of potentially explosive areas.

10.4 Rechargeable Battery MINI-EX___ (I/IIB/IIC) (Zone 1)

The explosion-proof battery of type MINI-EX-___ is used as a power supply for intrinsically safe handheld equipment (e.g. transmitters) in potentially explosive areas. Its task is to limit the current to <1.1 A in the event of a short circuit of the connection terminals.
For discharging, the battery is inserted into the corresponding battery compartment of the device to be supplied.
The battery is intended for discharging and replacement within the potentially explosive area.
The replacement battery can be carried into the EX area, but must be carried on your person. The battery may only be charged using battery charges specially labeled with EX from the HETRONIC company of the type MINI UCH-2-AC-EX or MINI UCH-2-DC-EX and only outside of potentially explosive areas.
The battery housing consists of a black polyester based thermoset material.
The non-anti-static projected surface of the battery is <20cm². Unlike standard batteries, the connections of the EX batteries have been replaced in order to prevent operation of the intrinsically safe equipment with the wrong batteries.

10.5 Battery Charger UCH-2-AC-EX2 / UCH-2-DC-EX2 (Zone 2/22)

The polarity of the battery charger is reversed in order to charge type MINI-EX2-_ _ _ /MINI-EX22 batteries. For this reason, never try to charge batteries which do not have this design, as otherwise the battery charger and the battery will be destroyed.
In order to achieve the longest possible service life for your batteries, they should only be charged again when the low-voltage indicator of the respective transmitter emits an acoustic or visual signal, depending on the design.

Battery charger UCH-2-AC-EX2 or UCH-2-DC-EX2 may only be operated outside of potentially explosive areas.

10.6 Rechargeable Battery MINI-EX2-___(IIB/IIC) / MINI-EX22 (Zone 2/22)

The explosion-proof battery MINI-EX2-_ _ _ /MINI-EX22 is used as a power supply for intrinsically safe handheld equipment (e.g. transmitters) in potentially explosive areas. Its task is to limit the current to <1.1 A in the event of a short circuit of the connection terminals. For discharging, the battery is inserted into the corresponding battery compartment of the device to be supplied.

The battery is intended for discharging within the potentially explosive area.
The battery may only be charged using battery charges specially labeled with **EX** from the HETRONIC company of the type **UCH-2-AC-EX2 or UCH-2-DC-EX2** and **only outside of potentially explosive areas**.

11. Diagnostics

Problem	Possible Cause	Solution
The transmitter does not respond when it is switched on.	The battery is empty.	Charge or replace the batteries.
	The fuse is blown.	The fuse has to be replaced by an authorized expert.
	The key switch is broken.	The key switch has to be replaced by an authorized expert.
Rechargeable battery is charged, but the transmitter does not respond when it is switched on.	The battery contacts are soiled.	Please clean the battery contacts using a cloth.
Communication failure between transmitter and receiver	The range has been exceeded.	Move towards the receiver.
	A radio remote control with the same frequency is operated in close proximity.	The RF settings have to be adjusted by an authorized expert.
	There is an object between transmitter and receiver.	Please change the position of the transmitter or modify the antenna position by using an antenna extension.
The operation time is short.	The battery is empty or broken.	Charge the battery and insert a fully charged battery into the transmitter. Check the LED display of the charger.

Do you have any questions?
Please contact your dealer or our HETRONIC service team.
We are here to help you.

11. Diagnostics

Problem	Possible Cause	Solution
The radio signal is good, but some of the activated functions do not work.	The connection between the machine and the receiver is broken.	Perhaps there are some cables loose. Check the receiver wiring on the respective function for loose wires.
	The output module is defective.	Check if there is a LED flashing on the receiver output module when the respective function is activated.
The system does not start after standard startup.	The stop button is engaged or broken.	Release the stop button. Activate the start/horn switch.
	A joystick is not in neutral position.	Ensure that all joysticks are in neutral position.
	The battery of the transmitter is empty.	Check the batteries and replace if necessary.
	The receiver is currentless.	The yellow LED (diagnostic display) has to flash. Check the fuses.
	The start button is broken.	The start button has to be replaced by an authorized expert.

Do you have any questions?
Please contact your dealer or our HETRONIC service team.
We are here to help you.

12. General Technical Data

12.1 System

Frequency range:	Europe 433/434 MHz and 458 MHz, certified for frequency ranges subject to approval and freely assignable frequency ranges in over 40 countries
RF synthesizer:	Microprocessor-controlled PLL synthesizer with 32 selectable frequencies
RF-output:	<10mW standard, increased transmitting power available on demand
Modulation:	FM – narrow bandwidth
Bandwidth:	25kHz, according to the system
Range:	up to 100 meters with standard antenna
Addressing:	20-bit (1 million different possibilities)
Temperature range:	-20°C up to +40°C
Resistance to moisture:	0-97% max. (non-condensing)
Response time:	approx. 450 ms
Baud rate:	2400/4800/9600 bps
Diagnosis:	Status displays for RF communication, operating voltage displays for transmitter and receiver, low battery indication
Certificates:	CE, TÜV, ISO 9001, ATEX, IECEx and many more
Control function:	Up to Performance Level »c« according to EN ISO 13849-1:2008 (depending on the technical version)
Stop function:	Up to Performance Level »d« according to EN ISO 13849-1:2008 (depending on the technical version)

12.2 Transmitter

Type:	Ergonomically designed housing
Housing material:	Fiber-enforced polyamide with glass fiber rate, according to the transmitter type, other materials available on demand
Protection class:	IP65
Antenna:	External
Battery compartment:	Electrically separated, with gold-plated, self-cleaning contacts
Operating time:	12 hours standard, depending on the system
Pushbuttons:	single or double stage
Joysticks:	All joysticks with automatic reset function, multiple-steps and proportional, dead man button optional, moisture repellent and ergonomically designed

12.3 Receiver

Housing material:	EX d-de die-cast aluminium housing or fiber-enforced polyamide with 30 % glass fiber rate, according to receiver type, other materials available on demand,
Connection:	Via moisture repellent connecting plug
Protection class:	IP65/IP66
Operating voltage:	12/24 VDC, 48/115/230 VAC
Current consumption:	<0,8 A, type dependent
Antenna:	external antenna, with moisture repellent connection, partly internal
Digital outputs:	Fail-safe and self-monitoring emergency stop circuit, all relay outputs 275VAC/8A
Prop. resolution:	8 Bit (256 steps per function), built-in ramp function selectable
Prop. outputs:	PWM signal with selectable dither frequency and current range, linear output voltage, setting of proportional functions via the transmitter (Quick set) or via potentiometer, multiple speed ranges selectable, all proportional functions may be set with initial and final speeds
Serial interfaces:	RS232/485, CAN-Open, Profi-Bus-DP

12.4 EX Zone 1 Receivers in Various Models

Equipment category:	II 2G EX d/de [ia] IIC T6
Protection class:	IP65/IP66
Housing material:	d-enclosure: die-cast aluminum (IIC) or light metal e-enclosure: sheet steel
Antenna:	External, designed with screw connection with ignition protection class „i" (intrinsically safe)
Connection:	via M screw connection in e-space
Weight:	approx. 30 kg depending on design

12.5 Handheld Control

Type:	Ergonomically designed housing
Housing material:	the transmitter is made of plastic and has an anti-static/conductive surface (surface resistance between 10^1 Ω and 10^9 Ω). Housing material: depending on housing type used.
Protection class:	at least IP 54
Weight:	usually approx. 1.9 kg to 4 kg, but depending on transmitter type and equipment
Push buttons:	one- or two-stage
Joystick:	all joysticks have automatic return, are moisture-repellant and have an ergonomic design
EX-protection:	Ignition protection class „i" (intrinsically safe)
	I M2 Ex ib I
Ambient temperature:	Ta = -20°C to +40°C

12. General Technical Data

12.6 EX Rechargeable Batteries

Type:	Akku MINI-EX-I	I M2 Ex ia I
	Akku MINI-EX-IIB	II 2G Ex ia IIB T4
	Akku MINI-EX-IIC	II 2G Ex ia IIC T4
	Akku MINI-EX2-IIB	II 3G Ex ic IIB T4
	Akku MINI-EX2-IIC	II 3G Ex ic IIC T4
	Akku MINI-EX22	II 3D Ex tD A22 T90°C IP65

Nominal capacity: 800mAh

Output values:	Uo	≤	4,5V/4,8V
	Io	≤	1,1A
	Po	≤	1,3W

	Max. permissible outer inductivity	Max. permissible outer capacity
MINI-EX-I	70µH	500µF
MINI-EX-IIB	70µH	500µF
MINI-EX-IIC	22µH	100µF
MINI-EX2-IIB	70µH	500µF
MINI-EX2-IIC	70µH	500µF
MINI-EX22	70µH	500µF

Ambient temperature: Ta = -20°C to +40°C

Housing: black polycarbonate

Dimensions: approx. (60 x 53 x 22)mm

Service life: approx. 900 charges

Type: NiMh

12.7 EX Battery Charger

Operating voltage:
UCH-2-AC-EX: 90-270 VAC
UCH-2-AC-EX2: 90-270 VAC

UCH-2-DC-EX: 10-30 VDC
UCH-2-DC-EX2: 10-30 VDC

Charging current: 300mA

Open-circuit voltage: ca. 19 VDC

Charging time: < 4 hours

Contacts: Gold-plated self-cleaning contacts

12.8 Technical Data Sheets

Technical data sheets with further information are available on the HETRONIC website.

12.9 General

The constitutional countries of the EC Declaration are valid for all members states of the European Community.

ATTENTION!
The use of the CS434 RF module is not subject to registration or payment of a fee. Never operate the transmitter without an antenna, as this may destroy the RF module. The frequency is preset by HETRONIC in the factory. In case of radio link problems with your system, please contact your dealer or the HETRONIC after sales service.

13. Maintenance, Guarantee, Disposal

13.1 Maintenance

In order to always have a safe radio remote control please note the following information:
Each radio remote control has to be inspected on a regular basis, at least once a year. The maintenance staff has to ensure that power to the transmitter and the receiver is shut off during maintenance and inspection work. A preventive maintenance by the operator on a regular basis will make for an extended service life.

Installation, adjustment and service work may only be performed by qualified personnel.
Possible repairs may only be performed in service stations that are authorized or recommended by HETRONIC or directly in HETRONIC's service and spare parts department..

The use of non original spare parts or the assignment of unauthorized personnel will immediately void your guarantee.

ATTENTION!
In case of oxidized electric contacts, do not use antioxidant or similar! Please contact your HETRONIC dealer for the immediate replacement of the affected parts. The use of chemical agents will cause damage on the internal components of the radio remote control.

13.2 Guarantee and Warranty

The guarantee and warranty conditions are listed in the General Terms and Conditions, alternatively in the Delivery and Payment Terms and Guarantee Conditions.

13.3 Disposal

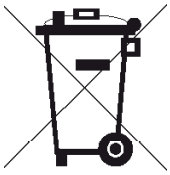

Avoid the pollution of the environment! Electronic devices and their components are hazardous waste! This applies particularly to rechargeable battery packs! Charge a specialist disposal company with the recycling and disposal! Defective rechargeable battery packs may also be disposed of directly through HETRONIC!

13.4 Qualified Persons according to the Ordinance on Industrial Safety and Health

Please note that operation, maintenance and repair work may only be performed by qualified persons according to the ordinance on industrial safety and health, with an adequate professional education, work experience and contemporary occupational activity.

Following initial installation, the explosion-proof electrical systems must be checked regularly for proper functioning and, where required but at least every three years, inspected by an official or officially recognized expert.

The results of the inspection and of the constant checks must be recorded in writing and stored for a minimum of 3 years. The records must be presented to the officials of the authorizing agency or regulatory agency at any time on request.

13.5 Spare Parts

Only use HETRONIC spare parts. The use of other spare parts may affect the performance, the durability and the safety of the system and result in the expiration of the warranty.

HETRONIC excludes all liability claims for material damages, personnel injury or death, which result from the use of unauthorized spare parts or services.

14. Abbreviations and Definitions

14.1 Abbreviations

AK	Analog channel
DK	Digital channel
EPROM	Electrical programmable read-only memory
FM	Frequency modulation
GND	Ground
HF	High frequency
KHz	Kilohertz
LED	Light emitting diode
mAH	Milliampere hours
mA	Milliampere
msec	Millisecond
MHz	Megahertz
mW	Milliwatt
NiMH	Nickel Metal Hydrite
PWM	Pulse width modulation
RF	Radio frequency
RX	Receiver
SMD	Surface mounted device
TTL	Transistor logic
TX	Transmitter
UB	Operating power
VAC	Volts alternating current
VDC	Volts direct current

14.2 Definitions

Acoustic signal	Buzzer or other sound, warning signal
Analog signal	Proportional stepless control
Coder	Converts input signals into serial data.
Decoder	Converts serial data into output signals.
Digital signal	On/off function
Maintained control	The function is activated, if the control is in position „on". If the control is released, it returns to position „off" and the function stops.
Momentary control	The function is activated as long as the button is pushed.
Proportional control	Proportional control

15. Installation and Safety Test Declaration

This form must be completed and signed by the person responsible for the installation of the system.

HETRONIC will not accept liability for the correctness of the installation of the radio remote control system. The operator has to assure, that the radio remote control and the machine have been adapted and tested, and that all relevant safety precautions are maintained. The operator has to follow all safety precautions of this manual and other relevant instructions.

Machine Data

Manufacturer

Type number

Serial number

Production year

Data of the Radio Remote Control

Manufacturer

Model

Type

System number

I/We have carried out the installation, startup and safety checks for the radio remote control system on the above mentioned machine. In doing so, the latest standards and regulations, applicable to this type of machine, have been maintained.

All norms and regulations concerning the EX-protection have been fulfilled.

Name of the testing EX-Expert: .....

Location, date

Company (address) / stamp

Name of responsible person Signature

Technical Sales Sheet

TECS_NO_007.2
11-01-2010

Transmitter Group: Nova-XL Series

Nova-XL Paddle Lever

Nova-XL Joystick

Housing:
Impact resistant polymer composite

Weight:
1.9 kg (4.1 lbs) typical depending on configuration

Dimensions:
Height: 165 mm (6.5 in)
Width: 312 mm (12.3 in)
Depth: 170 mm (6.7 in)

Environmental Protection:
IP 65 (Exceeds Nema 12/13)

Power Supply:
3.6 V NiMH rechargeable battery pack or battery adaptor with three 1.5 V AA batteries

Operation Time:
Varies depending on battery type and output power

Diagnostics:
Status LED for operation and standard/advanced low battery detection

Typical Control Configuration Options:
- Single and dual axis joysticks
- Single axis paddle levers
- Any combination of key switches, toggle switches, push buttons, rotary switches and stop switch
- Customized switches available upon request
- Half and full duplex feedback
- Cable back-up

Frequency:
419, 429, 434, 447, 458, 480, 868, 1216 MHz

RF Unit:
Type CS synthesized with multiple frequencies

Antenna:
Internal typical, external via TNC connector available

Power (RF Output):
< 10 mW typical, can be customized to suit application

Typical Operating Range:
Varies depending on antenna and RF output, approximately 100 m (300 ft) typical for internal antenna and 10 mW RF output

Baud Rate:
Up to 9600 bps depending on application

Safety:
20-bit programmable address concept with up to 1 million combinations
Active and passive Stop function
Parity & Checksum

Temperature Range:
-25° C . . . +70° C (-13° F . . . +158° F)

Humidity Range:
0 - 97% maximum non-condensing

Response Time:
Less than 100 msec

HETRONIC
www.hetronic.com

Technical Data Sheet

NOVA-XL Proportional

General Description

- Ergonomic and robust design with the highest possible variability
- Supreme performance with outstanding ease-of-use
- Individually configurable transmitter for your special application
- Key switch, stop button, toggle switches, push buttons, linear joysticks in Y direction or joysticks in X / Y direction, LED status display
- Individual labelling available
- Receiver programming via transmitter possible (Quick-Set)
- Optional cable control
- Multifunction display via LCD and LED available
- Tandem operation optional

Control Functions and Accessories

❶ Start button
❷ Key switch
❸ Stop button
❹ Push button
❺ Toggle switch
❻ Joystick
❼ Multifunction display
❽ LED status display
❾ LED feedback
❿ Original HETRONIC battery charger and battery

Technical Data Sheet

NOVA-XL Proportional

Safety Precautions

Attention: **Make sure that you have read and fully understood the manuals to both the safety radio remote control and the machine to be operated prior to commissioning!**

Always check if the **stop function** is working properly before operating the machine.

Please check the following points prior to each machine operation!

- ✓ Inspect the transmitter for possible damage
- ✓ Check the function of the stop button ❸ by means of the LED status display ❽
  (Transmitter on: LED flashes / if stop button is activated: LED flashes faster)
- ✓ You will hear an audible signal when activating the transmitter (default setting)

Transmitter Operation

The transmitter may only be operated by trained and authorised personnel! Insert a fully charged battery into the battery compartment of the transmitter. Start the transmitter by turning the **key switch ❷**. The **LED status display ❽** must flash green now and a buzzing sound will confirm the system check (approx. 2 seconds). After the startup procedure you can start the system with the **start button ❶**. With the **joystick ❻** and the **push buttons ❹** or the **toggle switches ❺** you can activate the designated function. The activated functions are now being transmitted to the receiver. The specific functions of the buttons/switches are described in the enclosed drawing!
You can stop the system by engaging the **stop button ❸** (conduct only in case of emergency).

LED status display: **Flashing (green) = Transmitter is ready for operation**
Flashing (green/red) = 10-minute-notice for low battery voltage

Buzzer: An interval signal gives notice in case of low battery voltage. After approx. 1 minute the transmitter will shut down.

Technical Data

Material	polyamide with glass fibre
Weight	approx. 1800 g
Diagnostics	status LED
RF technology	synthesizer
RF output	< 10 mW
Temperature range	-25 up to +70° C
Antenna	internal or external
Frequency range	434/869 MHz (for EU, other frequencies upon request)
Safety address	20 bit (1 Mio.)
Protection type	IP 65
Operating time	20 hours and more
Power supply	3,6 VDC

Dimensions

© HETRONIC Germany GmbH • Version 2

Changing Your Batteries

NOTE: The battery compartment is located in the back of the transmitter.

Alkaline Batteries

1. Remove the Battery Adapter Case from the battery compartment and dispose of the discharged batteries.
2. Insert 3 fresh batteries (Size AA) into the Battery Adapter Case, and snap it into place.

Rechargeable Battery

1. Remove the discharged battery from the battery compartment.
2. Snap a fully-charged replacement battery into the battery compartment.

Charging Your Battery

1. Confirm that your Hetronic battery charger is powered ON.
2. Insert the discharged battery into the battery compartment as shown and snap into place.

   The CHARGE LED flashes for 2 seconds, then stays lit.

   When fully charged, the READY LED lights up and the CHARGE LED turns OFF.

NOTE: Your battery is damaged if no LEDs light up (open cell) or the CHARGE LED flashes constantly (shorted cell).

Avoid Delays

To ensure that the charging process has begun, ALWAYS confirm that the battery charger is powered ON, and the proper CHARGE LED lights remain lit as noted in these instructions.

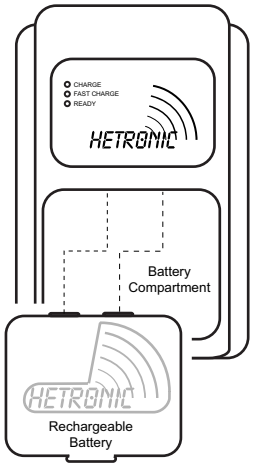

Battery Charger & Rechargeable Battery

Fast Charging Your Battery

1. Insert the discharged battery into the battery compartment and snap into place. The CHARGE LED flashes for 2 seconds, then stays lit.
2. Press FAST CHARGE. The FAST CHARGE LED also lights up and stays lit. When the READY LED lights up and the CHARGE and FAST CHARGE LEDs turn OFF, your battery is fully charged,

NOTE: Charging time could take up to 5 hours depending on your battery condition.

Troubleshooting

Batteries not charging:

- No power to the Charger. Supply power.

System not initializing after normal START:

- Disengage STOP pushbutton.
- Check batteries, replace if needed.
- Confirm that the receiver is powered ON.

Transmitter is ON, but does not transmit (status light is not flashing green):

- Check batteries, replace if needed.
- If batteries are fresh or fully charged, there may be an internal failure (see supervisor).

Unit is transmitting, but the machine not responding:

- Out of range. Restart transmitter within range.
- Confirm that the toggle switch is in the OFF position (this is normally the “center” position).
- Receiver is not powered ON. Turn ON receiver.
- Blown Fuse. Check and replace if needed.
- Transmitter/receiver frequency channels do not match (see your supervisor).
- Transmitter/receiver addresses do not match (see your supervisor).

All machine functions operate intermittently:

- Receiver antenna connection or ground loose.
- Interference.
- Connector inside receiver is loose.

Some machine functions operate intermittently:

- Machine motion wiring is loose. Check wiring from receiver to plug, from plug to actuator.
- Connector inside receiver is loose.

www.hetronic.com HETRONIC

Quick Reference

Nova XL Transmitters

QRCD_NO_003.0

Local But Global

Read This First

DANGER: Do not operate this transmitter unless you have been trained in the safe and proper operation of the radio control system and the machinery it is to control.

Be alert to unsafe conditions and be aware that radio remote control commands can take place around obstacles and out of your direct sight.

ALWAYS confirm that the machine and remote control STOP functions work properly BEFORE beginning any machine operation.

Turn OFF the transmitter when not in use. Remove the Memory Key (if equipped) when the unit is placed any distance away from you.

Before Operation

WARNING: Test the STOP function. NEVER operate the machine if the STOP function does not work properly.

Check the condition of your transmitter once a day, before the start of an operation and at all shift changes:

- Visually check the transmitter for any physical wear or damage.
- Confirm that you can read and understand all of the safety labels.

WARNING: Never operate a transmitter with worn or damaged parts.

Holding Your Transmitter

Hold the transmitter upright with the front facing you. Confirm that you are able to easily read and understand all operation text and symbols.

WARNING: Holding the transmitter improperly while operating your machine could result in unexpected machine response

Starting Your Transmitter

1. Confirm that all equipment manufacturer safety measures have been followed.
2. Confirm batteries are fresh or fully-charged.
3. Depress the STOP pushbutton.
4. Rotate the KEY SWITCH to the ON position.

NOTE: If the KEY SWITCH fails to turn, confirm that the KEY CAP is fully inserted.

A buzzer sounds, then in about 3 seconds, a second buzzer sounds.

After a brief self-test, the green Operational LED flashes.

NOTE: The Operational LED is not shown here because the specific location varies per application.

5. Determine the type of STOP pushbutton supplied with your transmitter (see below), and disengage the STOP function accordingly:
   - Pull-out Type—pull out the STOP pushbutton (do not twist).
   - Twist Type—twist the STOP pushbutton.

Pull-out Type

Twist Type

6. Press the green START/HORN pushbutton (if equipped).
7. Test the machine functions to ensure that the machine responds as expected.

DANGER: Machine functions operate during this test. Confirm that it is safe to test the functions and there are no obstacles near the machine.

8. Push in the STOP pushbutton and test the machine functions again to confirm that they DO NOT function.

DANGER: If any machine functions operate with the STOP pushbutton depressed, STOP IMMEDIATELY, turn OFF the transmitter, remove the batteries, and see your supervisor for next steps.

9. Repeat step 5.
10. Press the START/HORN pushbutton (if equipped).

Your system is ready for operation.

Stopping Your Transmitter

1. Depress the STOP pushbutton
2. Rotate the KEY SWITCH to the OFF position.
3. Remove the KEY CAP.

Store the KEY CAP in a safe place to prevent unauthorized use.

Emergency Stopping

Press the STOP pushbutton. Confirm that all dangerous situations are corrected before restarting.

Understanding the Operation LED

The green Operation LED indicates the following operational condition and status:

- Steady Green - Transmitter is ON, but not yet operational.
- Flashing Green - Transmitter is operational.

Low Battery Alert

During operation, a buzzer sounds to alert you to a low battery condition.

For safety reasons, the transmitter automatically shuts down after 30 seconds. Use this time to place your machine in a safe position.

To restart your transmitter, replace the discharged batteries, and see the *Starting Your Transmitter* procedure for next steps.

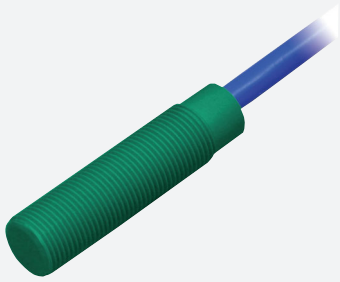

Inductive sensor

NJ4-12GK-N-5M

- Comfort series
- Usable up to SIL 2 acc. to IEC 61508

Dimensions

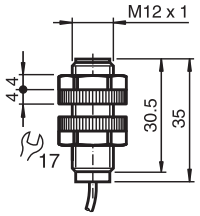

Technical Data

General specifications		
Switching function		Normally closed (NC)
Output type		NAMUR
Rated operating distance	s_n	4 mm
Installation		non-flush
Assured operating distance	s_a	0 ... 3.24 mm
Reduction factor r_{Al}		0.4
Reduction factor r_{Cu}		0.3
Reduction factor r_{304}		0.85
Output type		2-wire
Nominal ratings		
Nominal voltage	U_o	8.2 V (R_i approx. 1 kΩ)
Switching frequency	f	0 ... 1500 Hz
Current consumption		
Measuring plate not detected		min. 3 mA
Measuring plate detected		≤ 1 mA
Functional safety related parameters		

Release date: 2020-12-15 Date of issue: 2020-12-15 Filename: 106415_eng.pdf

Technical Data

$MTTF_d$	11774 a
Mission Time (T_M)	20 a
Diagnostic Coverage (DC)	0 %
Compliance with standards and directives	
Standard conformity	
NAMUR	EN 60947-5-6:2000 IEC 60947-5-6:1999
Standards	EN 60947-5-2:2007 EN 60947-5-2/A1:2012 IEC 60947-5-2:2007 IEC 60947-5-2 AMD 1:2012
Approvals and certificates	
IECEx approval	
Equipment protection level Gb	IECEx PTB 11.0037X
Equipment protection level Da	IECEx PTB 11.0037X
Equipment protection level Mb	IECEx PTB 11.0037X
ATEX approval	
Equipment protection level Gb	PTB 00 ATEX 2048 X
Equipment protection level Da	PTB 00 ATEX 2048 X
EAC conformity	TR CU 012/2011
FM approval	
Control drawing	116-0165
UL approval	cULus Listed, General Purpose
CSA approval	cCSAus Listed, General Purpose
CCC approval	
Hazardous Location	2020322315002255
NEPSI approval	
NEPSI certificate	GYJ16.1393X
Ambient conditions	
Ambient temperature	-25 ... 100 °C (-13 ... 212 °F)
Mechanical specifications	
Connection type	cable
Housing material	PBT
Sensing face	PBT
Degree of protection	IP66 / IP68
Cable	
Cable diameter	4.8 mm ± 0.2 mm
Bending radius	> 10 x cable diameter
Material	PVC
Core cross-section	0.34 mm^2
General information	
Use in the hazardous area	see instruction manuals

Connection

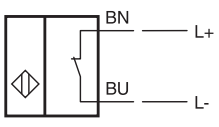

Release date: 2020-12-15 Date of issue: 2020-12-15 Filename: 106415_eng.pdf

Accessories

	BF 12	Mounting flange, 12 mm

Release date: 2020-12-15 Date of issue: 2020-12-15 Filename: 106415_eng.pdf

Instruction Manual

1. Marking

Inductive sensor
NJ4-12GK-N-5M
ATEX marking
⟨Ex⟩ II 2G Ex ia IIC T6...T1 Gb
⟨Ex⟩ II 1D Ex ia IIIC T135°C Da
IECEx marking
Ex ia IIC T6...T1 Gb
Ex ia IIIC T135°C Da
Ex ia I Mb

Pepperl+Fuchs Group
Lilienthalstraße 200, 68307 Mannheim, Germany
Internet: www.pepperl-fuchs.com

2. Validity

Specific processes and instructions in this instruction manual require special provisions to guarantee the safety of the operating personnel.

3. Target Group, Personnel

Responsibility for planning, assembly, commissioning, operation, maintenance, and dismounting lies with the plant operator.

The personnel must be appropriately trained and qualified in order to carry out mounting, installation, commissioning, operation, maintenance, and dismounting of the device. The trained and qualified personnel must have read and understood the instruction manual.

4. Reference to Further Documentation

Observe laws, standards, and directives applicable to the intended use and the operating location. Observe Directive 1999/92/EC in relation to hazardous areas.

The corresponding datasheets, manuals, declarations of conformity, EU-type examination certificates, certificates, and control drawings if applicable (see datasheet) are an integral part of this document. You can find this information under www.pepperl-fuchs.com.

Due to constant revisions, documentation is subject to permanent change. Please refer only to the most up-to-date version, which can be found under www.pepperl-fuchs.com.

5. Intended Use

The device is only approved for appropriate and intended use. Ignoring these instructions will void any warranty and absolve the manufacturer from any liability.

Technical data provided in the datasheet may be partly restrained by the information given in this instruction manual.

Use the device only within the specified ambient and operating conditions.

The device is an electrical apparatus for hazardous areas.

The certificate applies only to the use of apparatus under atmospheric conditions.

If you use the device outside atmospheric conditions, consider that the permissible safety parameters should be reduced.

The device can be used in hazardous areas containing gas, vapor, and mist.

The device can be used in hazardous areas containing combustible dust.

The device can be used in underground parts of mines as well as those parts of surface installations of such mines containing firedamp and/or combustible dust.

5.1. Requirements for Equipment Protection Level Gb

Refer to the relevant certificate to see the relationship between the connected circuit type, the maximum permitted ambient temperature, the effective inner reactances, and if applicable the surface temperature or the temperature class.

The suitability for use of the device at ambient temperatures >60 °C in conjunction with hot surfaces has been checked by the notified body.

5.2. Requirements for Equipment Protection Level Da

Refer to the relevant certificate to see the relationship between the connected circuit type, the maximum permitted ambient temperature, the effective inner reactances, and if applicable the surface temperature or the temperature class.

The suitability for use of the device at ambient temperatures >60 °C in conjunction with hot surfaces has been checked by the notified body.

5.3. Requirements for Equipment Protection Level Mb

Refer to the relevant certificate to see the relationship between the connected circuit type, the maximum permitted ambient temperature, the effective inner reactances, and if applicable the surface temperature or the temperature class.

The suitability for use of the device at ambient temperatures >60 °C in conjunction with hot surfaces has been checked by the notified body.

6. Improper Use

Protection of the personnel and the plant is not ensured if the device is not used according to its intended use.

7. Mounting and Installation

Observe the installation instructions according to IEC/EN 60079-14.

Safety-relevant markings are found on the nameplate of the device or the nameplate supplied.

Attach the nameplate supplied in the immediate vicinity of the device. Attach the nameplate so that it is legible and indelible. Take the ambient conditions into account.

Do not mount a damaged or polluted device.

Mount the device so that it complies with the specified degree of protection according to IEC/EN 60529.

If you use the device in environments subject to adverse conditions, you must protect the device accordingly.

Do not remove the warning markings.

7.1. Requirements for Usage as Intrinsically Safe Apparatus

When connecting intrinsically safe devices with intrinsically safe circuits of associated apparatus, observe the maximum peak values with regard to explosion protection (verification of intrinsic safety). Observe the standards IEC/EN 60079-14 or IEC/EN 60079-25.

The type of protection is determined by the connected intrinsically safe circuit.

Mount the device with at least a degree of protection of IP20 according to IEC/EN 60529.

7.2. Specific Conditions of Use

Mount the device so that it complies with the specified degree of protection according to IEC/EN 60529.

7.2.1. Requirements in Relation to Electrostatics

Information on electrostatic hazards can be found in the technical specification IEC/TS 60079-32-1.

Do not mount the supplied nameplate in areas that can be electrostatically charged.

7.2.2. Requirements to Mechanics

7.2.2.1. Requirements for Usage as Intrinsically Safe Apparatus

Protect the device from impact effects by mounting in a surrounding enclosure if it is used in the temperature range between the minimum permissible ambient temperature and -20 °C.

Mount the device with at least a degree of protection of IP20 according to IEC/EN 60529.

8. Operation, Maintenance, Repair

Observe the specific conditions of use.

Safety-relevant markings are found on the nameplate of the device or the nameplate supplied.

Do not use a damaged or polluted device.

Do not repair, modify, or manipulate the device.

Modifications are permitted only if approved in this instruction manual and in the device-related documentation.

If there is a defect, always replace the device with an original device.

Do not remove the warning markings.

8.1. Requirements for Usage as Intrinsically Safe Apparatus

Only operate the device with intrinsically safe circuits according to IEC/EN 60079-11.

The type of protection is determined by the connected intrinsically safe circuit.

8.2. Requirements for Equipment Protection Level Gb

Observe the temperature table for the corresponding equipment protection level in the certificate.

Also observe the maximum permissible ambient temperature stated in the technical data. Keep to the lower of the two values.

8.3. Requirements for Equipment Protection Level Da

Observe the temperature table for the corresponding equipment protection level in the certificate.

Also observe the maximum permissible ambient temperature stated in the technical data. Keep to the lower of the two values.

8.4. Requirements for Equipment Protection Level Mb

Observe the temperature table for the corresponding equipment protection level in the certificate.

Also observe the maximum permissible ambient temperature stated in the technical data. Keep to the lower of the two values.

9. Delivery, Transport, Disposal

Check the packaging and contents for damage.

Check if you have received every item and if the items received are the ones you ordered.

Keep the original packaging. Always store and transport the device in the original packaging.

Store the device in a clean and dry environment. The permitted ambient conditions must be considered, see datasheet.

The device, built-in components, packaging, and any batteries contained within must be disposed in compliance with the applicable laws and guidelines of the respective country.

10. National Ex approvals

EAC-EX:	TC RU C-DE.AA87.B.00394

ANZEx:	ANZEx 18.3018X

11. Safety-Relevant Technical Data

11.1. Equipment protection level Gb

Type of protection	Intrinsic safety
CE marking	CE-0102
Certificates	
Appropriate type	NJ4-12GK-N...
ATEX certificate	PTB 00 ATEX 2048 X
ATEX marking	Ex II 2G Ex ia IIC T6...T1 Gb
ATEX standards	EN 60079-0:2012-08, EN 60079-0/A11:2013-11, EN 60079-11:2012-01
IECEx certificate	IECEx PTB 11.0037X
IECEx marking	Ex ia IIC T6...T1 Gb
IECEx standards	IEC 60079-0:2011-06, IEC 60079-11:2011-06
Effective internal capacitance C_i	max. 45 nF A cable length of 10 m is considered.
Effective internal inductance L_i	max. 50 µH A cable length of 10 m is considered.
Maximum permissible ambient temperature in °C	Also observe the maximum permissible ambient temperature stated in the general technical data. Keep to the lower of the two values. U_i = 16 V, I_i = 25 mA, P_i = 34 mW T6: 73 °C T5: 88 °C T4: 100 °C T3: 100 °C T2: 100 °C T1: 100 °C U_i = 16 V, I_i = 25 mA, P_i = 64 mW T6: 69 °C T5: 84 °C T4: 100 °C T3: 100 °C T2: 100 °C T1: 100 °C U_i = 16 V, I_i = 52 mA, P_i = 169 mW T6: 51 °C T5: 66 °C T4: 80 °C T3: 80 °C T2: 80 °C T1: 80 °C U_i = 16 V, I_i = 76 mA, P_i = 242 mW T6: 39 °C T5: 54 °C T4: 61 °C T3: 61 °C T2: 61 °C T1: 61 °C

11.2. Equipment protection level Da

Type of protection	Intrinsic safety
CE marking	CE-0102
Certificates	
Appropriate type	NJ4-12GK-N...
ATEX certificate	PTB 00 ATEX 2048 X
ATEX marking	Ex II 1D Ex ia IIIC T135°C Da
ATEX standards	EN 60079-0:2012-08, EN 60079-0/A11:2013-11, EN 60079-11:2012-01
IECEx certificate	IECEx PTB 11.0037X
IECEx marking	Ex ia IIIC T135°C Da
IECEx standards	IEC 60079-0:2011-06, IEC 60079-11:2011-06
Effective internal capacitance C_i	max. 45 nF A cable length of 10 m is considered.
Effective internal inductance L_i	max. 50 µH A cable length of 10 m is considered.
Maximum permissible ambient temperature in °C	Also observe the maximum permissible ambient temperature stated in the general technical data. Keep to the lower of the two values. U_i = 16 V, I_i = 25 mA, P_i = 34 mW 100 °C U_i = 16 V, I_i = 25 mA, P_i = 64 mW 100 °C U_i = 16 V, I_i = 52 mA, P_i = 169 mW 80 °C U_i = 16 V, I_i = 76 mA, P_i = 242 mW 61 °C

11.3. Equipment protection level Mb

Type of protection	Intrinsic safety
Certificates	

Appropriate type	NJ4-12GK-N...
IECEx certificate	IECEx PTB 11.0037X
IECEx marking	Ex ia I Mb
IECEx standards	IEC 60079-0:2011-06, IEC 60079-11:2011-06
Effective internal capacitance C_i	max. 45 nF A cable length of 10 m is considered.
Effective internal inductance L_i	max. 50 µH A cable length of 10 m is considered.
Maximum permissible ambient temperature in °C	Also observe the maximum permissible ambient temperature stated in the general technical data. Keep to the lower of the two values. U_i = 16 V, I_i = 25 mA, P_i = 34 mW 100 °C U_i = 16 V, I_i = 25 mA, P_i = 64 mW 100 °C U_i = 16 V, I_i = 52 mA, P_i = 169 mW 80 °C U_i = 16 V, I_i = 76 mA, P_i = 242 mW 61 °C

01 02

Model Number

NJ10-30GK-N-15M

Features

- Comfort series
- 10 mm embeddable
- Usable up to SIL2 acc. to IEC 61508

Connection

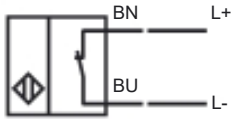

Accessories

BF 30
Mounting flange, 30 mm

Dimensions

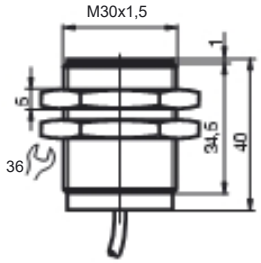

Technical Data

General specifications		
Switching element function		NAMUR, NC
Rated operating distance	s_n	10 mm
Installation		embeddable
Output polarity		NAMUR
Assured operating distance	s_a	0 ... 8.1 mm
Reduction factor r_{Al}		0.4
Reduction factor r_{Cu}		0.3
Reduction factor r_{V2A}		0.85
Nominal ratings		
Nominal voltage	U_o	8 V
Switching frequency	f	0 ... 300 Hz
Current consumption		
Measuring plate not detected		≥ 3 mA
Measuring plate detected		≤ 1 mA
Ambient conditions		
Ambient temperature		-25 ... 100 °C (-13 ... 212 °F)
Mechanical specifications		
Connection type		cable PVC , 15 m
Core cross-section		0.75 mm²
Housing material		PBT
Sensing face		PBT
Protection degree		IP68
General information		
Use in the hazardous area		see instruction manuals
Category		2G; 1D
Compliance with standards and directives		
Standard conformity		
NAMUR		EN 60947-5-6:2000 IEC 60947-5-6:1999
Standards		EN 60947-5-2:2007 IEC 60947-5-2:2007
Approvals and certificates		
UL approval		cULus Listed, General Purpose
CSA approval		cCSAus Listed, General Purpose
CCC approval		Products with a maximum operating voltage of ≤36 V do not bear a CCC marking because they do not require approval.

Release date: 2010-11-16 12:08 Date of Issue: 2010-11-19 100477_ENG.xml

Subject to modifications without notice
Copyright Pepperl+Fuchs

ATEX 2G

Instruction	Manual electrical apparatus for hazardous areas
Device category 2G	for use in hazardous areas with gas, vapour and mist
Directive conformity	94/9/EG
Standard conformity	EN 60079-0:2006, EN 60079-11:2007 Ignition protection "Intrinsic safety" Use is restricted to the following stated conditions
CE symbol	CE 0102
Ex-identification	¬ II 2G Ex ia IIC T6
EC-Type Examination Certificate	PTB 00 ATEX 2048 X
Appropriate type	NJ 10-30GK...-N...
Effective internal capacitance C_i	≤ 140 nF ; a cable length of 10 m is considered.
Effective internal inductance L_i	≤ 100 µH ; a cable length of 10 m is considered.
General	The apparatus has to be operated according to the appropriate data in the data sheet and in this instruction manual. The EC-Type Examination Certificate has to be observed. The special conditions must be adhered to! Directive 94/9/EG and hence also EC-Type Examination Certificates apply in general only to the use of electrical apparatus under atmospheric conditions. The use in ambient temperatures of > 60 °C was tested with regard to hot surfaces by the mentioned certification authority. If the equipment is not used under atmospheric conditions, a reduction of the permissible minimum ignition energies may have to be taken into consideration.
Highest permissible ambient temperature	The temperature ranges, according to temperature class, are given in the EC-Type Examination Certificate.
Installation, Comissioning	Laws and/or regulations and standards governing the use or intended usage goal must be observed. The intrinsic safety is only assured in connection with an appropriate related apparatus and according to the proof of intrinsic safety.
Maintenance	No changes can be made to apparatus, which are operated in hazardous areas. Repairs to these apparatus are not possible.
Special conditions	
Protection from mechanical danger	When used in the temperature range below -20 °C the sensor should be protected from knocks by the provision of an additional housing.

Release date: 2010-11-16 12:08 Date of Issue: 2010-11-19 100477_ENG.xml

Pepperl+Fuchs Group www.pepperl-fuchs.com
USA: +1 330 486 0001 fa-info@us.pepperl-fuchs.com
Germany: +49 621 776-4411 fa-info@pepperl-fuchs.com
Singapore: +65 6779 9091 fa-info@sg.pepperl-fuchs.com

Subject to modifications without notice
PEPPERL+FUCHS SENSING YOUR NEEDS

ATEX 1D

Instruction	Manual electrical apparatus for hazardous areas
Device category 1D	for use in hazardous areas with combustible dust
Directive conformity	94/9/EG
Standard conformity	IEC 61241-11:2002: draft; prEN61241-0:2002 type of protection intrinsic safety "iD" Use is restricted to the following stated conditions
CE symbol	CE 0102
Ex-identification	¬ II 1D Ex iaD 20 T 108 °C (226.4 °F)
EC-Type Examination Certificate	ZELM 03 ATEX 0128 X
Appropriate type	NJ 10-30GK...-N...
Effective internal capacitance C_i	≤ 140 nF ; a cable length of 10 m is considered.
Effective internal inductance L_i	≤ 100 µH ; a cable length of 10 m is considered.
General	The apparatus has to be operated according to the appropriate data in the data sheet and in this instruction manual. The EC-Type Examination Certificate has to be observed. The special conditions must be adhered to!
Maximum housing surface temperature	The maximum surface temperature of the housing is given in the EC-Type Examination Certificate.
Installation, Comissioning	Laws and/or regulations and standards governing the use or intended usage goal must be observed. The intrinsic safety is only assured in connection with an appropriate related apparatus and according to the proof of intrinsic safety. The associated apparatus must satisfy at least the requirements of category ia IIB or iaD. Because of the possibility of the danger of ignition, which can arise due to faults and/or transient currents in the equipotential bonding system, galvanic isolation in the power supply and signal circuits is preferable. Associated apparatus without electrical isolation must only be used if the appropriate requirements of IEC 60079-14 are met. The intrinsically safe circuit has to be protected against influences due to lightning. When used in the isolating wall between Zone 20 and Zone 21 or Zone 21 und Zone 22 the sensor must not be exposed to any mechanical danger and must be sealed in such a way, that the protective function of the isolating wall is not impaired. The applicable directives and standards must be observed.
Maintenance	No changes can be made to apparatus, which are operated in hazardous areas. Repairs to these apparatus are not possible.
Special conditions	
Electrostatic charging	The connection cables are to be laid in accordance with EN 50281-1-2 and must not normally be subjected to chaffing during use.

Release date: 2010-11-16 12:08 Date of Issue: 2010-11-19 100477_ENG.xml

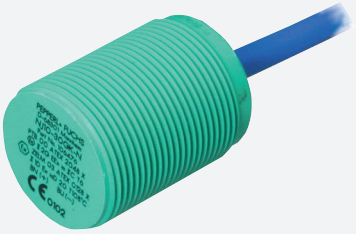

Inductive sensor

NJ10-30GK-N-15M

- 10 mm flush
- Usable up to SIL 2 acc. to IEC 61508

Dimensions

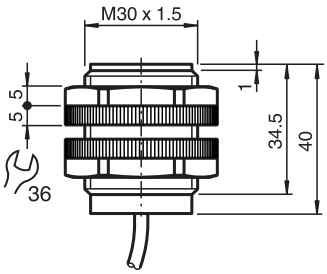

Technical Data

General specifications		
Switching function		Normally closed (NC)
Output type		NAMUR
Rated operating distance	s_n	10 mm
Installation		flush
Assured operating distance	s_a	0 ... 8.1 mm
Reduction factor r_{Al}		0.4
Reduction factor r_{Cu}		0.3
Reduction factor r_{304}		0.85
Output type		2-wire
Nominal ratings		
Nominal voltage	U_o	8.2 V (R_i approx. 1 kΩ)
Switching frequency	f	0 ... 300 Hz
Current consumption		
Measuring plate not detected		min. 3 mA
Measuring plate detected		≤ 1 mA
Compliance with standards and directives		

Release date: 2020-12-15 Date of issue: 2020-12-15 Filename: 106477_eng.pdf

Technical Data

Standard conformity		
NAMUR		EN 60947-5-6:2000 IEC 60947-5-6:1999
Standards		EN 60947-5-2:2007 EN 60947-5-2/A1:2012 IEC 60947-5-2:2007 IEC 60947-5-2 AMD 1:2012
Approvals and certificates		
IECEx approval		
Equipment protection level Gb		IECEx PTB 11.0037X
Equipment protection level Da		IECEx PTB 11.0037X
Equipment protection level Mb		IECEx PTB 11.0037X
ATEX approval		
Equipment protection level Gb		PTB 00 ATEX 2048 X
Equipment protection level Da		PTB 00 ATEX 2048 X
EAC conformity		TR CU 012/2011
UL approval		cULus Listed, General Purpose
CSA approval		cCSAus Listed, General Purpose
CCC approval		
Hazardous Location		2020322315002255
NEPSI approval		
NEPSI certificate		GYJ16.1393X
Ambient conditions		
Ambient temperature		-25 ... 100 °C (-13 ... 212 °F)
Mechanical specifications		
Connection type		cable
Housing material		PBT
Sensing face		PBT
Degree of protection		IP66 / IP68
Cable		
Cable diameter		6 mm ± 0.2 mm
Bending radius		> 10 x cable diameter
Material		PVC
Core cross-section		0.75 mm^2
Length	L	15 m
General information		
Use in the hazardous area		see instruction manuals

Connection

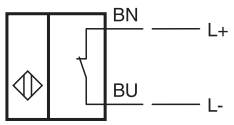

Accessories

	BF 30	Mounting flange, 30 mm

Release date: 2020-12-15 Date of issue: 2020-12-15 Filename: 106477_eng.pdf

Instruction Manual

1. Marking

Inductive sensor NJ10-30GK-N-15M
ATEX marking ⟨Ex⟩ II 2G Ex ia IIC T6...T1 Gb ⟨Ex⟩ II 1D Ex ia IIIC T135°C Da
IECEx marking Ex ia IIC T6...T1 Gb Ex ia IIIC T135°C Da Ex ia I Mb

Pepperl+Fuchs Group Lilienthalstraße 200, 68307 Mannheim, Germany
Internet: www.pepperl-fuchs.com

2. Validity

Specific processes and instructions in this instruction manual require special provisions to guarantee the safety of the operating personnel.

3. Target Group, Personnel

Responsibility for planning, assembly, commissioning, operation, maintenance, and dismounting lies with the plant operator.

The personnel must be appropriately trained and qualified in order to carry out mounting, installation, commissioning, operation, maintenance, and dismounting of the device. The trained and qualified personnel must have read and understood the instruction manual.

4. Reference to Further Documentation

Observe laws, standards, and directives applicable to the intended use and the operating location. Observe Directive 1999/92/EC in relation to hazardous areas.

The corresponding datasheets, manuals, declarations of conformity, EU-type examination certificates, certificates, and control drawings if applicable (see datasheet) are an integral part of this document. You can find this information under www.pepperl-fuchs.com.

Due to constant revisions, documentation is subject to permanent change. Please refer only to the most up-to-date version, which can be found under www.pepperl-fuchs.com.

5. Intended Use

The device is only approved for appropriate and intended use. Ignoring these instructions will void any warranty and absolve the manufacturer from any liability.

Technical data provided in the datasheet may be partly restrained by the information given in this instruction manual.

Use the device only within the specified ambient and operating conditions.

The device is an electrical apparatus for hazardous areas.

The certificate applies only to the use of apparatus under atmospheric conditions.

If you use the device outside atmospheric conditions, consider that the permissible safety parameters should be reduced.

The device can be used in hazardous areas containing gas, vapor, and mist.

The device can be used in hazardous areas containing combustible dust.

The device can be used in underground parts of mines as well as those parts of surface installations of such mines containing firedamp and/or combustible dust.

5.1. Requirements for Equipment Protection Level Gb

Refer to the relevant certificate to see the relationship between the connected circuit type, the maximum permitted ambient temperature, the effective inner reactances, and if applicable the surface temperature or the temperature class.

The suitability for use of the device at ambient temperatures >60 °C in conjunction with hot surfaces has been checked by the notified body.

5.2. Requirements for Equipment Protection Level Da

Refer to the relevant certificate to see the relationship between the connected circuit type, the maximum permitted ambient temperature, the effective inner reactances, and if applicable the surface temperature or the temperature class.

The suitability for use of the device at ambient temperatures >60 °C in conjunction with hot surfaces has been checked by the notified body.

5.3. Requirements for Equipment Protection Level Mb

Refer to the relevant certificate to see the relationship between the connected circuit type, the maximum permitted ambient temperature, the effective inner reactances, and if applicable the surface temperature or the temperature class.

The suitability for use of the device at ambient temperatures >60 °C in conjunction with hot surfaces has been checked by the notified body.

6. Improper Use

Protection of the personnel and the plant is not ensured if the device is not used according to its intended use.

7. Mounting and Installation

Observe the installation instructions according to IEC/EN 60079-14.

Safety-relevant markings are found on the nameplate of the device or the nameplate supplied.

Attach the nameplate supplied in the immediate vicinity of the device. Attach the nameplate so that it is legible and indelible. Take the ambient conditions into account.

Do not mount a damaged or polluted device.

Mount the device so that it complies with the specified degree of protection according to IEC/EN 60529.

If you use the device in environments subject to adverse conditions, you must protect the device accordingly.

Do not remove the warning markings.

7.1. Requirements for Usage as Intrinsically Safe Apparatus

When connecting intrinsically safe devices with intrinsically safe circuits of associated apparatus, observe the maximum peak values with regard to explosion protection (verification of intrinsic safety). Observe the standards IEC/EN 60079-14 or IEC/EN 60079-25.

The type of protection is determined by the connected intrinsically safe circuit.

Mount the device with at least a degree of protection of IP20 according to IEC/EN 60529.

7.2. Specific Conditions of Use

Mount the device so that it complies with the specified degree of protection according to IEC/EN 60529.

7.2.1. Requirements in Relation to Electrostatics

Information on electrostatic hazards can be found in the technical specification IEC/TS 60079-32-1.

Do not mount the supplied nameplate in areas that can be electrostatically charged.

7.2.1.1. Requirements for Equipment Protection Level Da

Avoid electrostatic charges which could result in electrostatic discharges while installing, operating, or maintaining the device.

7.2.2. Requirements to Mechanics

7.2.2.1. Requirements for Usage as Intrinsically Safe Apparatus

Protect the device from impact effects by mounting in a surrounding enclosure if it is used in the temperature range between the minimum permissible ambient temperature and -20 °C.

Mount the device with at least a degree of protection of IP20 according to IEC/EN 60529.

8. Operation, Maintenance, Repair

Observe the specific conditions of use.

Safety-relevant markings are found on the nameplate of the device or the nameplate supplied.

Do not use a damaged or polluted device.

Do not repair, modify, or manipulate the device.

Modifications are permitted only if approved in this instruction manual and in the device-related documentation.

If there is a defect, always replace the device with an original device.

Do not remove the warning markings.

8.1. Requirements for Usage as Intrinsically Safe Apparatus

Only operate the device with intrinsically safe circuits according to IEC/EN 60079-11.

The type of protection is determined by the connected intrinsically safe circuit.

8.2. Requirements for Equipment Protection Level Gb

Observe the temperature table for the corresponding equipment protection level in the certificate.

Also observe the maximum permissible ambient temperature stated in the technical data. Keep to the lower of the two values.

8.3. Requirements for Equipment Protection Level Da

Observe the temperature table for the corresponding equipment protection level in the certificate.

Also observe the maximum permissible ambient temperature stated in the technical data. Keep to the lower of the two values.

8.4. Requirements for Equipment Protection Level Mb

Observe the temperature table for the corresponding equipment protection level in the certificate.

Also observe the maximum permissible ambient temperature stated in the technical data. Keep to the lower of the two values.

9. Delivery, Transport, Disposal

Check the packaging and contents for damage.

Check if you have received every item and if the items received are the ones you ordered.

Keep the original packaging. Always store and transport the device in the original packaging.

Store the device in a clean and dry environment. The permitted ambient conditions must be considered, see datasheet.

The device, built-in components, packaging, and any batteries contained within must be disposed in compliance with the applicable laws and guidelines of the respective country.

10. National Ex approvals

EAC-EX:	TC RU C-DE.AA87.B.00394

ANZEx:	ANZEx 18.3018X

11. Safety-Relevant Technical Data

11.1. Equipment protection level Gb

Type of protection	Intrinsic safety
CE marking	CE-0102
Certificates	
Appropriate type	NJ10-30GK...-N...
ATEX certificate	PTB 00 ATEX 2048 X
ATEX marking	Ex II 2G Ex ia IIC T6...T1 Gb
ATEX standards	EN 60079-0:2012-08, EN 60079-0/A11:2013-11, EN 60079-11:2012-01
IECEx certificate	IECEx PTB 11.0037X
IECEx marking	Ex ia IIC T6...T1 Gb
IECEx standards	IEC 60079-0:2011-06, IEC 60079-11:2011-06
Effective internal capacitance C_i	max. 140 nF A cable length of 10 m is considered.
Effective internal inductance L_i	max. 100 µH A cable length of 10 m is considered.
Maximum permissible ambient temperature in °C	Also observe the maximum permissible ambient temperature stated in the general technical data. Keep to the lower of the two values. U_i = 16 V, I_i = 25 mA, P_i = 34 mW T6: 73 °C T5: 88 °C T4: 100 °C T3: 100 °C T2: 100 °C T1: 100 °C U_i = 16 V, I_i = 25 mA, P_i = 64 mW T6: 69 °C T5: 84 °C T4: 100 °C T3: 100 °C T2: 100 °C T1: 100 °C U_i = 16 V, I_i = 52 mA, P_i = 169 mW T6: 51 °C T5: 66 °C T4: 80 °C T3: 80 °C T2: 80 °C T1: 80 °C U_i = 16 V, I_i = 76 mA, P_i = 242 mW T6: 39 °C T5: 54 °C T4: 61 °C T3: 61 °C T2: 61 °C T1: 61 °C

11.2. Equipment protection level Da

Type of protection	Intrinsic safety
CE marking	CE-0102
Certificates	
Appropriate type	NJ10-30GK...-N...
ATEX certificate	PTB 00 ATEX 2048 X
ATEX marking	Ex II 1D Ex ia IIIC T135°C Da
ATEX standards	EN 60079-0:2012-08, EN 60079-0/A11:2013-11, EN 60079-11:2012-01
IECEx certificate	IECEx PTB 11.0037X
IECEx marking	Ex ia IIIC T135°C Da
IECEx standards	IEC 60079-0:2011-06, IEC 60079-11:2011-06
Effective internal capacitance C_i	max. 140 nF A cable length of 10 m is considered.
Effective internal inductance L_i	max. 100 µH A cable length of 10 m is considered.
Maximum permissible ambient temperature in °C	Also observe the maximum permissible ambient temperature stated in the general technical data. Keep to the lower of the two values. U_i = 16 V, I_i = 25 mA, P_i = 34 mW 100 °C U_i = 16 V, I_i = 25 mA, P_i = 64 mW 100 °C U_i = 16 V, I_i = 52 mA, P_i = 169 mW 80 °C U_i = 16 V, I_i = 76 mA, P_i = 242 mW 61 °C

11.3. Equipment protection level Mb

Type of protection	Intrinsic safety
Certificates	

Appropriate type	NJ10-30GK...-N...
IECEx certificate	IECEx PTB 11.0037X
IECEx marking	Ex ia I Mb
IECEx standards	IEC 60079-0:2011-06, IEC 60079-11:2011-06
Effective internal capacitance C_i	max. 140 nF A cable length of 10 m is considered.
Effective internal inductance L_i	max. 100 µH A cable length of 10 m is considered.
Maximum permissible ambient temperature in °C	Also observe the maximum permissible ambient temperature stated in the general technical data. Keep to the lower of the two values. U_i = 16 V, I_i = 25 mA, P_i = 34 mW 100 °C U_i = 16 V, I_i = 25 mA, P_i = 64 mW 100 °C U_i = 16 V, I_i = 52 mA, P_i = 169 mW 80 °C U_i = 16 V, I_i = 76 mA, P_i = 242 mW 61 °C

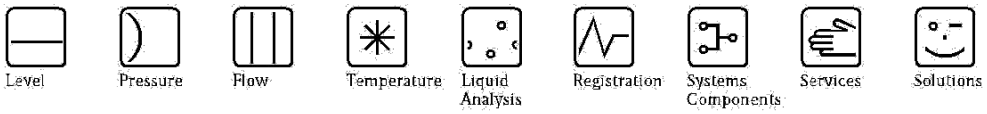

Safety Instructions

Liquiphant M/S

FTL50(H), FTL51(H), FTL51C, FTL70, FTL71

ATEX: II 1/2 G Ex d IIC T2 ...T6 Ga/Gb,
II 1/2 G Ex d IIC/IIB T3... T6 Ga/Gb
IECEx: Ex d IIC T2...T6 Ga/Gb,
Ex d IIC/IIB T3... T6 Ga/Gb

KEMA 99 ATEX 1157; IECEx BKI 08.0009

0 **XA00031F-H**

en - Safety instructions for electrical apparatus for explosion-hazardous areas according to Directive 94/9/EC (ATEX) and IEC ➔ Page 11

XA00031F-
H/00/A3/13.10 71124354

Endress+Hauser
People for Process Automation

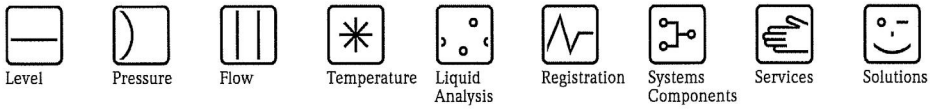

EG-Konformitätserklärung
EC Declaration of Conformity
Déclaration CE de Conformité

EG 99 016 -g

CE

Endress+Hauser GmbH+Co. KG, Hauptstraße 1, 79689 Maulburg

erklärt als Hersteller in alleiniger Verantwortung, dass das Produkt
declares as manufacturer under sole responsibility, that the product
déclare sous sa seule responsabilité en qualité de fabricant que le produit

LIQUIPHANT M/S Füllstandgrenzschalter

FTL50(H), FTL51(H), FTL51C, FTL70, FTL71

den Vorschriften folgender Europäischer Richtlinien durch Anwendung harmonisierter Normen entspricht:
conforms with the provisions of the following European Directives by applying the harmonised standards:
est conforme aux prescriptions des Directives Européennes suivantes par l'application des normes harmonisées:

Richtlinien/Directives/Directives	Normen/Standards/Normes	Ex-Normen/Ex-Standards/Normes Ex*
2004/108/EG (EMC)	EN 61326-1 (2006)	EN 60079-0 (2009)
2006/95/EG (LVD)	EN 61326-2-3 (2006)	EN 60079-1 (2007)
94/9/EG (ATEX)*	EN 61326-2-5 (2006)	EN 60079-26 (2007)
	EN 60947-5-6 (2000)	
	EN 61010-1 (2001)	

*nur für Produkte mit der Kennzeichnung/only for products with the marking/seulement pour les produits avec le marquage: Ex II 1/2 G

EG-Baumusterprüfbescheinigung Nr:
EC-Type Examination Certificate No:
Numéro de l'attestation d'examen CE de type: **KEMA 99 ATEX 1157**

Benannte Stelle/Notified Body/Organisme notifié

- EG-Typprüfung/EC-Type Examination/Examen CE de type: **DEKRA Certification B.V. (0344)**
- Qualitätssicherung/Quality assurance/Système d'assurance qualité: **TÜV Nord Cert GmbH (0044)**

Maulburg, 01.02.2011

Endress + Hauser GmbH + Co. KG

i. V. Dr. Arno Götz
Leiter Zertifizierung/Certification Manager/Responsable de certification

Endress+Hauser
People for Process Automation

Liquiphant M/S
FTL50(H), FTL51(H), FTL51C, FTL70, FTL71

english

Associated Documentation

This document is an integral part of the following Operating Instructions:
KA143F/00, KA144F/00, KA163F/00, KA164F/00, KA162F/00, KA165F/00, KA172F/00, KA173F/00

The Operating Instructions which are supplied and correspond to the device type apply.

Supplementary Documentation

Explosion-protection brochure:
CP021Z/00

Designation

Explanation of the labelling and type of protection can be found in the explosion protection brochure.

Designation according to Directive 94/9/EC

CE 0044 Ex

II 1/2 G

Designation of type of protection/ level of protection

Ex d IIC T2...T6 Ga/Gb
Ex d IIC T3...T6 Ga/Gb
Ex d IIB T3...T6 Ga/Gb

Designation according to IECEx Equipment protection level (EPL)

Ga/Gb

Designation of type of protection/ level of protection

Ex d IIC T2...T6 Ga/Gb
Ex d IIC T3...T6 Ga/Gb
Ex d IIB T3...T6 Ga/Gb

Applied standards

ATEX: See page 3: EC Declaration of Conformity

IECEx: IEC 60079-0 :2004
IEC 60079-1 :2001

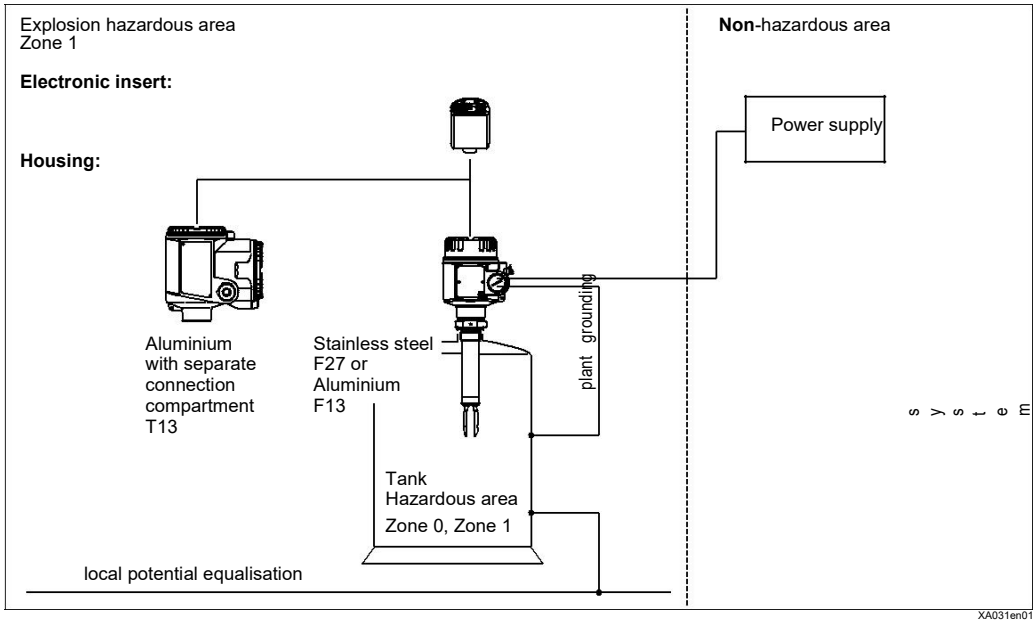

Fig. 1

Electronic inserts:
FEL51, FEL52, FEL54, FEL55, FEL56, FEL57, FEL58, FEL50A, FEL50D

Type of protection/level of protection	Type
Ex d IIC T3…T6 Ga/Gb	FTL50(H), FTL51(H), FTL51C with coating of enamel or conductive PFA
Ex d IIB T3…T6 Ga/Gb	FTL51C with coating of ECTFE or non-conductive PFA
Ex d IIC T2…T6 Ga/Gb	FTL70, FTL71

Safety instructions: General

- Staff must meet the following conditions for mounting, electrical installation, commissioning and maintenance of the device:
  – Be suitably qualified for their role and the tasks they perform
  – Be trained in explosion protection
  – Be familiar with national regulations (e.g. IEC/EN 60079-14)
- Install the device according to the manufacturer's instructions and any other valid standards and regulations.
- Do not operate the device outside the specified electrical, thermal and mechanical parameters.
- Only install the devices in media for which the wetted materials have sufficient durability.
- The relationship between the permitted ambient temperature for the electronics housing, dependent on the range of application, and the temperature classes is shown in Fig. 2 and Fig. 3.
- Modifications to the device can affect the explosion protection and must be carried out by staff authorized to perform such work by Endress+Hauser.

Safety instructions: Special conditions

- Permitted ambient temperature range at the electronics housing: –60 °C ≤ Ta ≤ +70 °C. Restrictions for covers with glass window: –50 °C ≤ Ta ≤ +70 °C. Observe the information in Fig. 2 and Fig. 3.

Safety instructions: Installation

- Comply with the installation and safety instructions in the Operating Instructions.
- Install the device according to the manufacturer's instructions and any other valid standards and regulations (e.g. IEC 60079-14).
- Pay attention to the maximum process conditions according to the manufacturer's Operating Instructions.
- At high medium temperatures note flange pressure load capacity as a factor of temperature.
- To maintain the ingress protection of the housing IP66/67, install the housing cover and cable glands correctly.
- Install the device to exclude any mechanical damage or friction during the application. Pay particular attention to flow conditions and tank fittings.
- Support extension tube of the device if a dynamic load is expected.
- Install the device to exclude impact and friction sparks on the aluminium housing.
- In case of additional or alternative special varnishing of the enclosure or other metallic parts the danger of an electrostatic charging must be observed. Do not rub surfaces with dry cloth.
- Do not open the electrical connection of the power supply circuit under voltage in an explosive atmosphere.
- Do not open the connection compartment cover under voltage in an explosive atmosphere.
- Only use suitable certified cable entries for the application.
- Selection criteria as per IEC/EN 60079-14 must be observed. Accordingly, the connection terminal does not include any ignition sources.
- For operating the transmitter housing at an ambient temperature under -20 °C, appropriate cables and cable entries permitted for this application must be used.
- For connection through a conduit entry approved for this purpose the associated sealing facility shall be mounted directly to the housing.
- Seal unused entry glands with approved sealing plugs that correspond to the type of protection. The plastic transport sealing plug does not meet this requirement and must therefore be replaced during installation.
- During operation, the cover must be screwed all the way in and the cover's safety catch must be fastened.

F13, T13

- Covers with glass window are allowed but only for the following range of ambient temperatures: –50 °C ≤ Ta ≤ +70 °C.

F27

- Cover with glass window is not permitted.

Instructions: Ex d joints

Specification according to IEC/EN 60079-1:2007, Chapter 5.1

- If required or if doubt: ask manufacturer for specifications.

The dependency of the ambient and process temperatures upon the temperature class:

Type	Temperature class	Process temperature (sensor), Tp (process)	Ambient temperature (electronics), Ta (ambient)
FTL50(H), FTL51(H); FTL51C (ECTFE, PFA or enamel coating)	T6	–50 °C... +85 °C	–60 °C ≤ Ta ≤ +70 °C for cover with glass window: –50 °C ≤ Ta ≤ +70 °C
FTL70, FTL71		–60 °C... +85 °C	
FTL50(H), FTL51(H); FTL51C (ECTFE, PFA or enamel coating)	T5	–50 °C...+100 °C	FTL50, FTL51: –60 °C ≤ Ta ≤ +70 °C for cover with glass window: –50 °C ≤ Ta ≤ +70 °C with temperature spacer; without temperature spacer see Fig. 2 FTL70, FTL71: –60 °C ≤ Ta ≤ +70 °C for cover with glass window: –50 °C ≤ Ta ≤ +70 °C
FTL70, FTL71		–60 °C...+100 °C	
FTL51C (ECTFE coating)	T4	–50 °C...+120 °C	
FTL50(H), FTL51(H); FTL51C (PFA or enamel coating)	T4	–50 °C...+135 °C	
FTL70, FTL71		–60 °C...+135 °C	
FTL50(H), FTL51(H); FTL51C (PFA or enamel coating)	T3	–50 °C...+150 °C	
FTL70, FTL71	T3	–60 °C...+200 °C	–60 °C ≤ Ta ≤ +70 °C for cover with glass window: –50 °C ≤ Ta ≤ +70 °C
FTL70/71-..... L	T2	–60 °C...+230 °C	
FTL70/71-..... N	T2	–60 °C...+280 °C	For restrictions, see Fig. 3
FTL70/71-..... Y	T2	–60 °C…+300 °C	

FTL50(H), FTL51(H), FTL51C

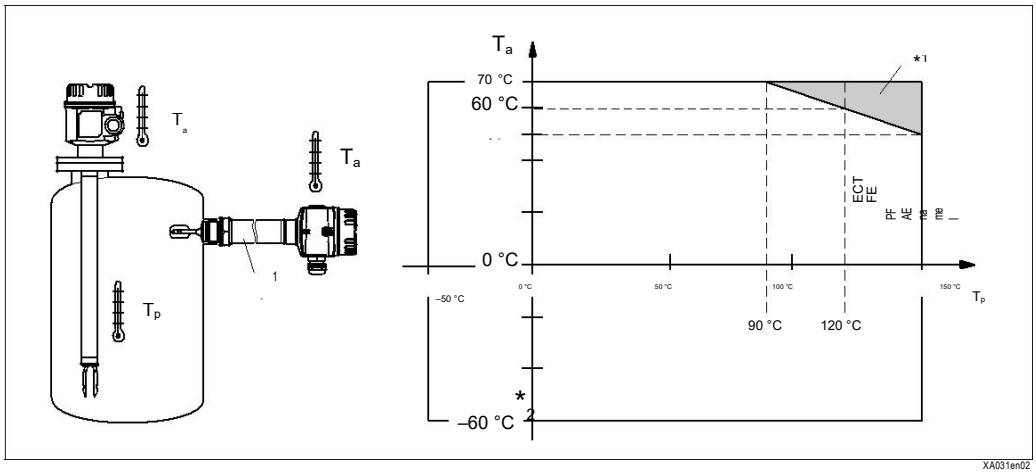

Fig. 2

**1 Additional temperature range for sensors with temperature spacer or pressure-tight bushing*

**2 –50 °C for cover with glass window*

FTL70, FTL71

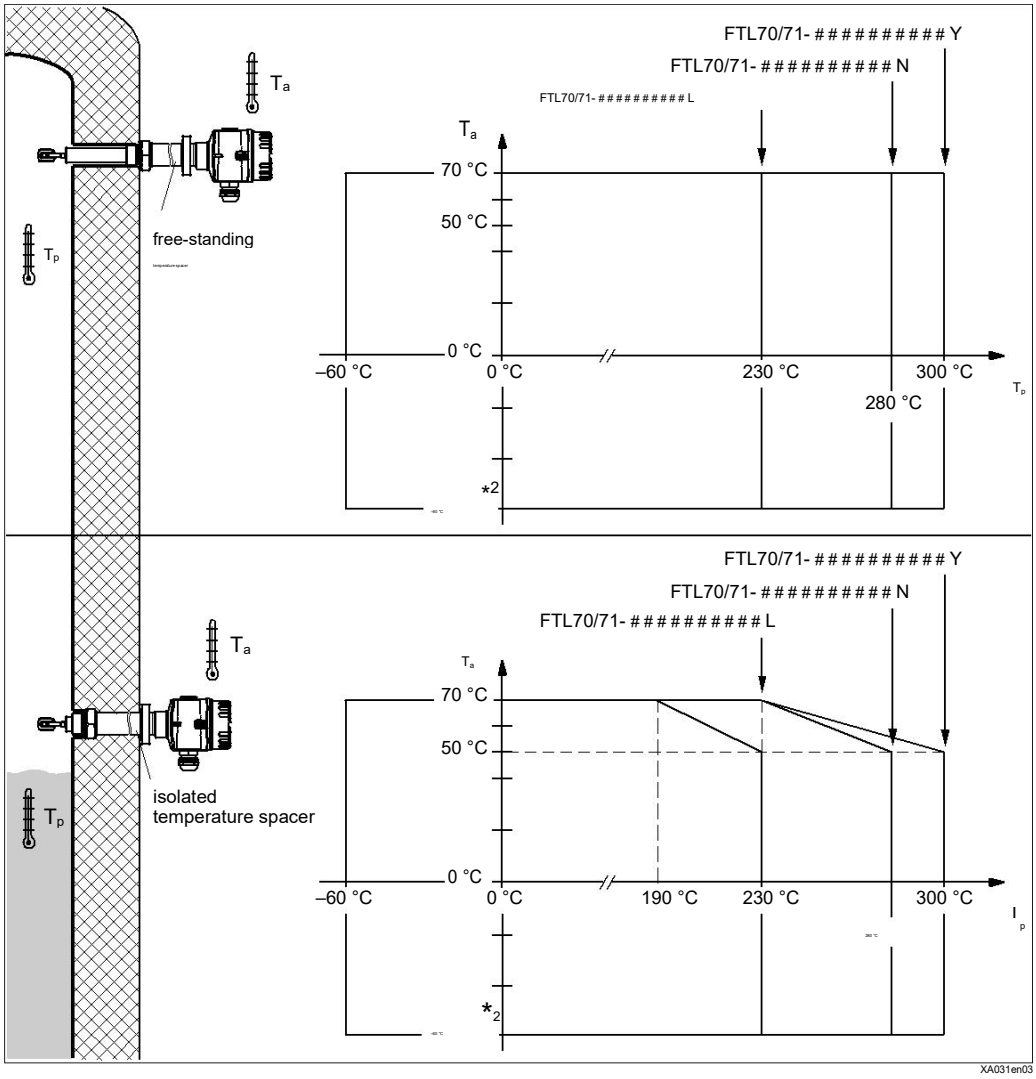

Fig. 3

**2 –50 °C for cover with glass window*

Safety instructions:
Zone 0

- Only operate devices in potentially explosive vapour/air mixtures under atmospheric conditions:
  – Temperature: –20 to +60 °C
  – Pressure: 80 to 110 kPA (0.8 to 1.1 bar)
  – Air with normal oxygen content, usually 21 % (V/V)
- If no potentially explosive mixtures are present, or if additional protective measures have been taken, according to EN 1127-1, the transmitters may be operated under other atmospheric conditions in accordance with the manufacturer's specifications
- Only install the devices in media for which the wetted materials have sufficient durability (e.g. process connection seal).

Operating Instructions:

- Do not open the connection or electronics compartments under voltage in an explosive atmosphere.
- Waiting time before opening the electronics compartment after switching off the power supply: 17 min.

Explosion protection with heat insulation for Liquiphant S:

- While observing the "temperature derating" described on page 15, Liquiphant S is suitable for process temperatures up to 300 °C.
- When operating, take suitable measures (e.g. thermal insulation at container and/or pipes) to ensure you rule out contact between hot component surfaces and potentially explosive atmospheres beyond the limits of the corresponding temperature class (see page 14).
- The temperature of 85 °C specified at the reference point may not be exceeded.
- The specified ambient temperature at the electronics housing must be observed to protect the electronics.

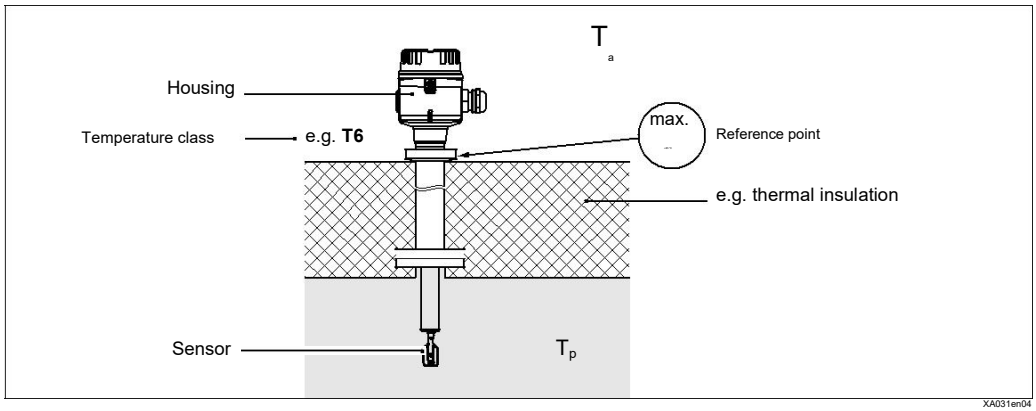

Fig. 4

www.endress.com/worldwide

Endress+Hauser

People for Process Automation

XA00031F-H/00/A3/13.10
71124354
CCS/FM+SGML 6.0

71124354

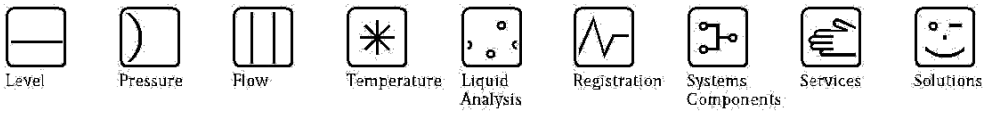

Safety Instructions

Nivotester FTL325P

ATEX: II (1) GD [Ex ia/ib]
IIC/IIB IEC: [Ex ia Ga] IIC
[Ex ia Da] IIIC

DMT 01 ATEX E 052; IECEx BKI 05.0003

0

XA00133F-D

de - Sicherheitshinweise für elektrische Betriebsmittel für explosionsgefährdete Bereiche gemäß Richtlinie 94/9/EG (ATEX) und IEC ➔ Seite 5

en - Safety instructions for electrical apparatus for explosion-hazardous areas according to Directive 94/9/EC (ATEX) and IEC ➔ Page 9

fr - Conseils de sécurité pour matériels électriques destinés aux zones explosibles et selon Directive 94/9/CE (ATEX) et IEC ➔ Page 13

XA00133F-
D/00/A3/13.10 71130767

Endress+Hauser

People for Process Automation

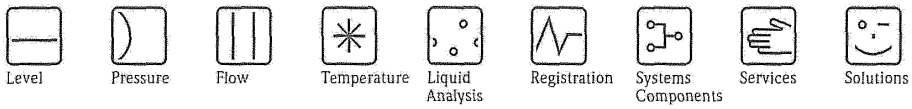

EG-Konformitätserklärung
EC Declaration of Conformity
Déclaration CE de Conformité

EG 01 010-c

CE

Endress+Hauser GmbH+Co. KG, Hauptstraße 1, 79689 Maulburg

erklärt als Hersteller in alleiniger Verantwortung, dass das Produkt
declares as manufacturer under sole responsibility, that the product
déclare sous sa seule responsabilité en qualité de fabricant que le produit

NIVOTESTER Füllstandgrenzschalter

FTL325P, FTL325 N

den Vorschriften folgender Europäischer Richtlinien durch Anwendung harmonisierter Normen entspricht:
conforms with the provisions of the following European Directives by applying the harmonised standards:
est conforme aux prescriptions des Directives Européennes suivantes par l'application des normes harmonisées:

Richtlinien/Directives/Directives	Normen/Standards/Normes		Ex-Normen/Ex-Standards/Normes Ex*	
2004/108/EG (EMC)	EN 61326-1	(2006)	EN 50014	(1997)
2006/95/EG (LVD)	EN 61326-2-3	(2006)	EN 50020	(1994)
94/9/EG (ATEX)*	EN 61010-1	(2001)	EN 50284	(1999)
			EN 50281-1-1	(1998)

Das Gerät entspricht ohne Änderungen auch den folgenden neuen, harmonisierten Normen:
There are no changes required to enable compliance to the replacement standards:
L'appareil non modifié satisfait également aux nouvelles normes harmonisées suivantes:

EN 60079-0 (2006)
EN 60079-11 (2007)
EN 60079-26 (2007)
EN 61241-0 (2007)

*nur für Produkte mit der Kennzeichnung/only for products with the marking/seulement pour les produits avec le marquage: (Ex) II (1) GD

EG-Baumusterprüfbescheinigung Nr:
EC-Type Examination Certificate No:
Numéro de l'attestation d'examen CE de type: DMT 01 ATEX E 052

Benannte Stelle/Notified Body/Organisme notifié

- EG-Typprüfung/EC-Type Examination/Examen CE de type: DEKRA EXAM Bochum (0158)
- Qualitätssicherung/Quality assurance/Système d'assurance qualité: TÜV Nord Cert GmbH (0044)

Maulburg, 10.06.2009

Endress + Hauser GmbH + Co. KG

i. V. Dr. Arno Götz
Leiter Zertifizierung
Certification Manager
Responsable de certification

Endress+Hauser
People for Process Automation

Nivotester
FTL325P

english

Associated Documentation

This document is an integral part of the following Operating Instructions:
KA167F/00, KA168F/00, TI350F/00

The Operating Instructions which are supplied and correspond to the device type apply.

Supplementary Documentation

Explosion-protection brochure:
CP021Z/00

Designation

Explanation of the labelling and type of protection can be found in the explosion protection brochure.

Designation according to Directive 94/9/EC

CE 0044 Ex

II (1) G

II (1) D

Designation of type of protection/ level of protection

[Ex ia] IIC
[Ex ib] IIC
[Ex ia] IIB
[Ex ib] IIB

Designation according to IECEx Equipment protection level (EPL)

[Ga]

[Da]

Designation of type of protection/ level of protection

[Ex ia Ga] IIC

[Ex ia Da] IIIC

Applied standards

ATEX: See page 3: EC Declaration of Conformity

IECEx: IEC 60079-0 :2007
IEC 60079-11 :2006
IEC 61241-0 :2004
IEC 61241-11 :2005

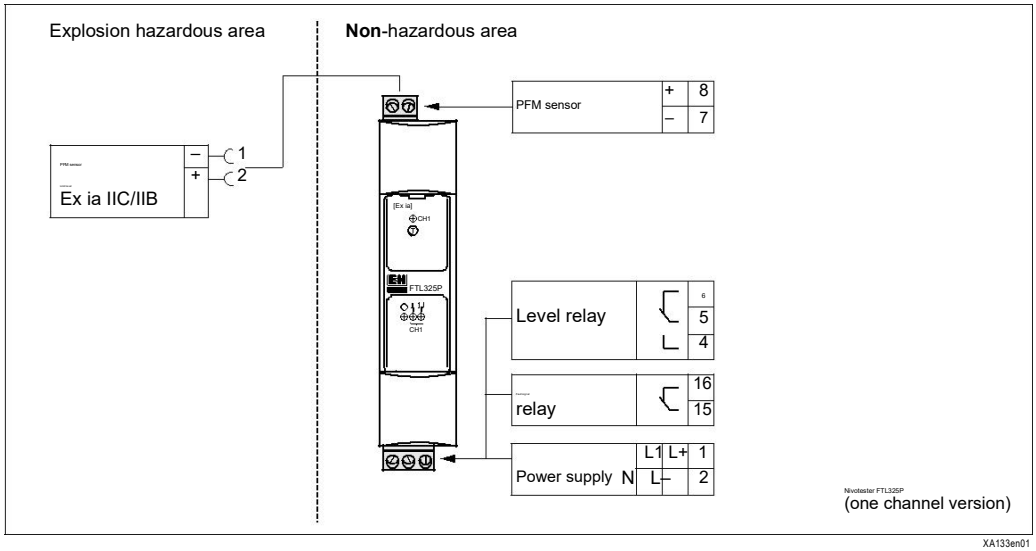

Fig. 1

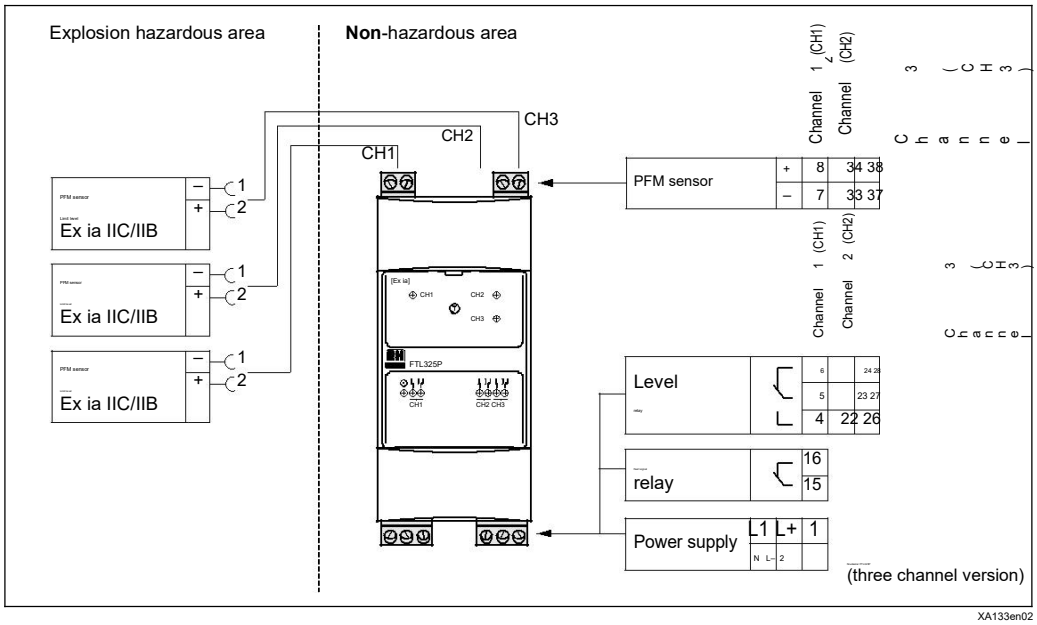

Fig. 2

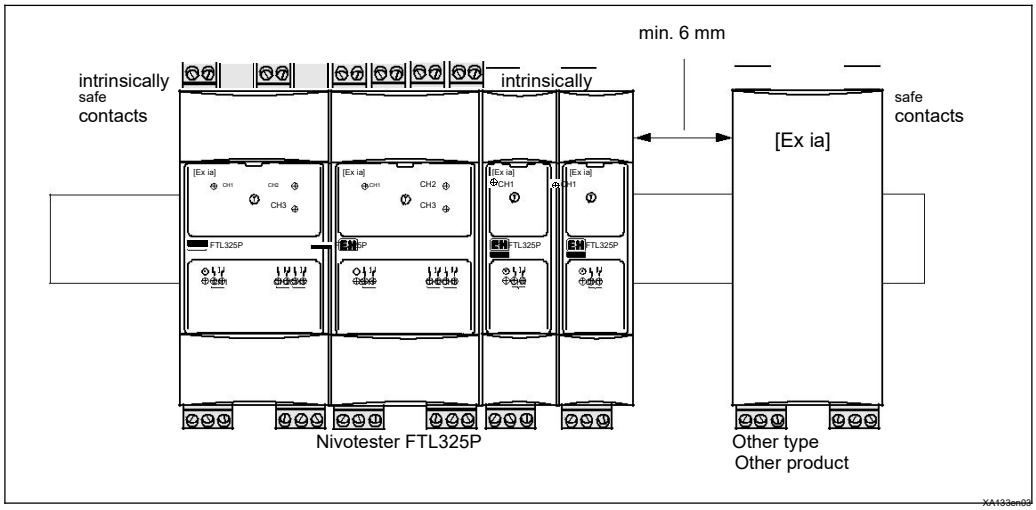

Fig. 3

Safety instructions: Installation

- Install the device according to the manufacturer's instructions and any other valid standards and regulations.
- Comply with the installation and safety instructions in the Operating Instructions.
- Do not operate the device outside the specified electrical, thermal and mechanical parameters.
- Protect the device from dust and humidity, e.g. in control rooms or in a suitable protective housing so that ingress protection of at least IP55 according to EN 60529 is achieved.
- The device is an integral apparatus and may only be used outside explosion hazardous areas.
- If the intrinsically-safe circuit which can be connected to the device passes through dust explosion-hazardous areas of Zones 20 or 21, make sure that the devices connected to this circuit meet the requirements of categories 1D or 2D and are certified accordingly.
- There should be a distance (thread measure) of at least 50 mm between intrinsically-safe and non-intrinsically-safe terminals.
- Keep to the distances required in IEC 60079-11 and to the relevant standards and rules for combining the device with other types and products on the same top-hat rail (see fig. 3).
- The instrinsically-safe input circuits are galvanically isolated from other circuits up to a peak value of the nominal voltage of 375 V.
- The pertinent guidelines must be observed when intrinsically safe circuits are connected together acc. EN/IEC 60079-14 (Proof of Intrinsic Safety).

Operating temperature range	–20 °C ≤ T_{amb} ≤ +60 °C (individual installation) –20 °C ≤ T_{amb} ≤ +50 °C (series installation)

	AC voltage version:	DC voltage version:
Power circuit Terminal connection: 1, 2	U = 85...253 V AC, 50/60 Hz P ≤ 1.7 W (one channel version) P ≤ 4.2 W (three channel version)	U = 20...60 V DC U = 20...30 V AC, 50/60 Hz P ≤ 1.5 W (one channel version) P ≤ 3.3 W (three channel version)
Contact circuits (level relay) Terminal connections: Channel 1 (CH1): 4, 5, 6 *1 Channel 2 (CH2): 22, 23, 24 *1 Channel 3 (CH3): 26, 27, 28 *1 not available in one channel version	U ≤ 253 V AC, I ≤ 2 A, P ≤ 500 VA at cos ϕ ≥ 0.7 U ≤ 40 V DC, I ≤ 2 A, P ≤ 80 W	
Contact circuit (alarm relay) Terminal connection: 15, 16	U ≤ 253 V AC, I ≤ 2 A, P ≤ 500 VA at cos ϕ ≥ 0.7 U ≤ 40 V DC, I ≤ 2 A, P ≤ 80 W	

Sensor circuits Terminal connections: Channel 1 (CH1): 7, 8 *1 Channel 2 (CH2): 33, 34 *1 Channel 3 (CH3): 37, 38 *1 not available in one channel version	**Connection data** U_o ≤ 14.6 V I_o ≤ 97 mA P_o ≤ 633 mW		R_i ≥ 273 Ω C_i ≤ 19 nF L_i = 0		Trapezium-shaped characteristic
		[Ex ia] IIC		**[Ex ia] IIB**	
		L_o	**C_o**	**L_o**	**C_o**
	max. external capacitance at max. external inductance	0.5 mH	300 nF	1 mH	1 µF
		1.0 mH	200 nF	5 mH	500 nF
	max. external capacitance or max. external inductance	3 mH	640 nF	15 mH	3.9 µF
If using explosion protection group [Ex ib] IIC/IIB the application is limited to **II (2) GD**		**[Ex ib] IIC**		**[Ex ib] IIB**	
		L_o	**C_o**	**L_o**	**C_o**
	max. external capacitance or max. external inductance	3 mH	640 nF	15 mH	3.9 µF

www.endress.com/worldwide

Endress+Hauser

People for Process Automation

XA00133F-D/00/A3/13.10
71130767
CCS/FM+SGML 6.0

71130767

Manual for the

Installation

Use and Maintenance

"Söll-GlideLoc" fall arrest system

of Y-Spar ladders

Hot Dip Galvanized Steel Part No. YST

Pickled Stainless Steel Part No. YA4

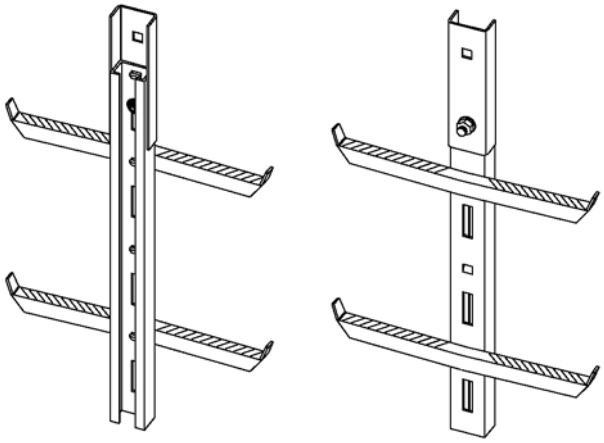

Date: 20.01.2010
SE 4
Technical specifications are subject to change without notice.

Sperian Fall Protection Deutschland GmbH & Co. KG, D-95015 Hof-Bavaria, P. O. B. 1646, Phone +49/9281/8302-0, Fax +49/9281/3626, soell@sperianprotection.com

Table of contents

A General 3

B Installation 4

C Information regarding curves 22

D Inspection and approval 23

E Bolt connections/securing of bolts 25

F Maintenance 25

G Check list 28

These instructions are protected by copyright!

They may not be reproduced and distributed in any ways/ by any means without prior written consent of the author according to Articles 16 and 17 of the German Copyright Act. Sperian Fall Protection Deutschland GmbH & Co. KG will prosecute any violations against this under Article 106 of the German Copyright Act.

Notice!
In this issue the following has been changed: address

A General

A 1. Anyone working with or on SÖLL fall protection systems in accordance with EN 353/part 1 must be familiarized with these instructions prior to using the system. Use which is not in accordance with these instructions constitutes a risk to human life!

A 2. The operator of the fall protection system must ensure that these instructions are either
- retained in a dry and secure condition at the installation or
- retained by the operator, whereby he or she must ensure that the user is aware of the storage location of these instructions and that the documents are accessible at all times.

A 3. If requested, the plant operator must present these instructions to the manufacturer of the fall protection system (Sperian Fall Protection Deutschland GmbH & Co. KG or a dealer authorized by the same).

A 4. The SÖLL fall protection system must be used in accordance with the instructions for the relevant SÖLL fall arrester.

A 5. The fitment and use of SÖLL accessories to such fall protection systems must strictly adhere to the relevant instructions for the fitment and use thereof.

A 6. In case of the use of further personal protective equipment, relevant instructions must be followed.

A 7. National regulations on accident prevention and use of safety equipment for construction work must be adhered to.

A 8. Söll fall protection systems may only be fitted and used with original Söll components/ elements. The combination with non-original components/elements may influence the safety of SÖLL fall protection systems. In such cases, Sperian Fall Protection Deutschland GmbH & Co. KG and a dealer authorized by the same refuse to accept product liability. In addition, such systems are not properly approved and authorized since SÖLL fall protection systems are tested, approved and authorized as complete systems. Full liability will therefore rest with the operator.

A 9. Söll fall protection components, made of stainless steel grade 1.4571 are pickled. They should be stored and further processed in an appropriate way.

A 10. The check list (see Section H) must be fully and correctly compiled by the chief engineer of the installing company by means of an indelible pen.

A 11. Before and during the use of the installed fall protection system, the system must be visibly inspected to ensure that it is operating properly.

A 12. While fastening clamps, the bars may deform a little. This may cause breaks to the layer of zinc. This has no adverse effect to safety, durability or corrosion resistance.

A 13. With a weight of 100 kg and fall factor 2 situation (worst-case scenario) the height required under the feet of the user is at least 2 m.

Sperian Fall Protection Deutschland GmbH & Co. KG, D-95015 Hof-Bavaria, P. O. B. 1646, Phone +49/9281/8302-0, Fax +49/9281/3626, soell@sperianprotection.com

A 14. The system has been tested and approved by "Stelle 0158: EXAM BBG Prüf- und Zertifizier GmbH, Zertifizierungsstelle, Dinnendahlstraße 9, 44809 Bochum.

B Installation

B 1. **The installation components consist of**

- several ladder sections which may be fitted as required,
- A profile connector fixed on each ladder section with:
  version steel: 2 special bolts with nut and toothed lock washer
  version stainless steel: 2 special bolts with self-locking nut DIN 985
- a corresponding amount of mounting brackets, which must be fixed with a maximum distance of 1680mm.

For every climbing path at least

- 1 "Bottom End Stop", Part No. 11632
- 1 "Top End Stop", Part No. 11631
  or one "Rigid End Stop", Part No. 11634.

The bolts for wall anchorage must be chosen to suit the relevant under structure and if needed must be design proven.

All bolt connections shall be secured using the lock washers/nyloc nuts as delivered together with the referred bolts. Refer to Section F „Bolt connections/securing of bolts“.

B 2. **Equipment required for easy mounting:**

2 open wrenches, SW 19
1 open wrench, SW 17
1 open wrench for wall bolts, according to requirements
1 open wrench, SW 13.

For mounting to existing structures:

2 fall arresters,
2 full body harnesses according EN 361,
1 cantilever arm with pulley (for a max. load of 20 kg),
purchase order no. 17563, for lifting and lowering of ladder sections,
1 rope for cantilever arm, maximum diameter 12 mm, length as required,
1 toolbox,
2 walkie-talkies, and
Min. 1 additional safety lanyard according to EN 354/355 with energy absorber for each person to protect the mounting person against falls from height during the installation.

Sperian Fall Protection Deutschland GmbH & Co. KG, D-95015 Hof-Bavaria, P. O. B. 1646, Phone +49/9281/8302-0, Fax +49/9281/3626, soell@sperianprotection.com

B 3. **Personnel required for installation**:
two persons

B 4. Before installation, all ladder sections should be laid out in the mounting sequence (watch out for section numbers; this applies especially in case of curved climbing paths).

Caution:
If a recess (Fig. 4/Detail 1.3) is provided in one of the sections delivered, this section of the ladder must be used as **first element** of the climbing path if fitted from the bottom upwards. It may **never** be used at higher levels since it would include the risk of a fall from a height, causing fatal injuries or damage to property.

B 5. Components must be handled carefully. Ladder sections must not be thrown.

B 6. Before installation, ladder sections must be cleaned from dirt - in particular on connecting surfaces. They should not come into contact with cement, mortar or similar substances. Remnants of mortar must be wiped off immediately. Especially the sliding surfaces for the fall arrester on the inside and outside of the guide-rail must be free of dirt.

B 7. Damaged parts may neither be used nor repaired but must be replaced by new ones.

B 8. Minimum bolt dimensions for the installation of Söll fall protection ladders:

The minimum bolt size is M 12. According to DIN 18799-3, the bolts used on chimneys must be of stainless steel A 4 DIN ISO 3506-1, at least M 20 or, when used for anchoring, 1.25 m M 12 bolts. Ordering of the mounting brackets must be based on the minimum dimensions.

B 9. We specifically stress that only those dowels may be used which are permitted by site inspection engineers.

B 10. For <u>concrete structures</u> we recommend the use of injection anchor or undercut dowels (such as Hilti, Fischer, UPAT or Liebig); follow technical instructions given by the manufacturer.

In case of installation on brick wall constructions we recommend you to consult the responsible design engineer for an approval in each specific case.

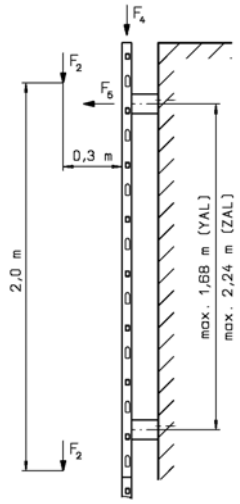

Use the following instructions to calculate the anchoring forces. Always select the least favourable loading result.

- Extreme influences (fall accident):
  In case a load F4 = 6 kN acting along the centre of the ladder is to be assumed. This load may be distributed over four mounting brackets (if available).
- Varying influences (loads appearing during use):
  In this case it shall be assumed that loads F2 = 1,5 kN appears at a distance of 30 cm in front of the ladder centre and in distances of 2 m from each other influence the installation. Also consider a horizontal load F5 = 0,3 kN influencing the attachment at the most unfavourable location.

Sperian Fall Protection Deutschland GmbH & Co. KG, D-95015 Hof-Bavaria, P. O. B. 1646, Phone +49/9281/8302-0, Fax +49/9281/3626, soell@sperianprotection.com

B 11. Using a recommended mounting distance between brackets of 1.400 mm up to a max. of 1.680 mm.

B 12. When the climbing path ends on a platform, the ladder/guide-rail must rise at least 1000 mm above the upper edge of the platform. If the last anchorage point is situated more than 380 mm below the end of the rail, a reinforcement profile of 50 x 30 x 3 mm has to be used that:
- extends over the last two mounting brackets
- is connected to the rail at distances of 560 mm
- does not have any rail connection

B 13. In case of lying structures (e.g. antenna towers) or in case a scaffolding is at hand we recommend the ladder system be installed from the **top and downwards.**

For upright structures (e.g. buildings) the installation shall be performed from the **ground and upwards.**

B 14. **Caution:**
By using a mounting distance of 1120 mm, the installation of the ladder may be carried out without a scaffold. When using a greater mounting distance, an installation scaffold is required. The person installing the equipment uses a full-body harness and a fall arrester. In order to be protected against a fall from a height where the fall arrester slips from the rail, or the not completely installed ladder bends backwards, the installer must always use a safety lanyard with shock absorber in accordance to EN 354/355 or a retaining rope in accordance with EN 358 (see Fig. 1).
Warning!
The proper functioning of the fall arrester can only be guaranteed in that part of the guiding rail that is located between gated end stops as well as during proper use.

Installation or dismounting of the fall arrester on the guiding rail as well as moving beyond the gated end stop may only be done in a safe position (e.g., firm ground, safe platform).

Sperian Fall Protection Deutschland GmbH & Co. KG, D-95015 Hof-Bavaria, P. O. B. 1646, Phone +49/9281/8302-0, Fax +49/9281/3626, soell@sperianprotection.com

Fig. 1

B 15. Erection staff can during the installation secure themselves by using:

> Safety lanyard (acc. to EN 354/355) connected to the center rail to the ladder under the highest situated properly secured mounting bracket

> The carabiner of a safety lanyard (EN 354/355) is connected to a mounting bracket

> Support lanyard (EN 358) routed around the centre rail of the ladder

> The use of an external anchorage point

Fig. 1

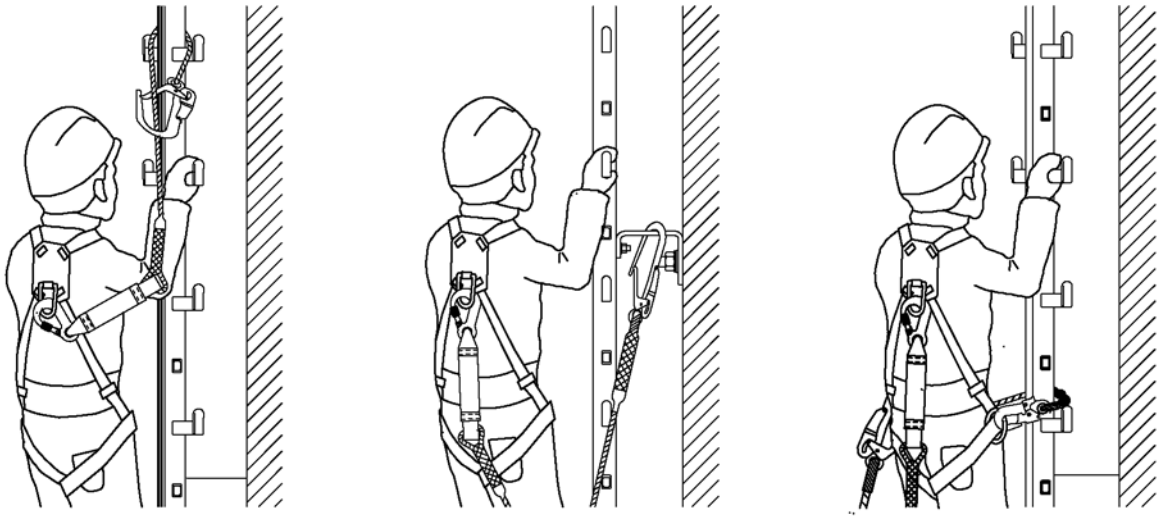

EN 354/355 **EN 358**

Sperian Fall Protection Deutschland GmbH & Co. KG, D-95015 Hof-Bavaria, P. O. B. 1646, Phone +49/9281/8302-0, Fax +49/9281/3626, soell@sperianprotection.com

Fig. 2a, b, c

B 16. Before mounting the ladder sections to the structure, the mounting brackets (2.0) are loosely to be attached to the guide rail of the ladder (1.1) at a distance of max. 1680 mm.

Important:
Every ladder section should be connected to the support structure by at least one mounting bracket!

Comment:
Two ladder sections jointed together by means of an exit section (part No. 11317/16978) are to be considered as one single ladder section. **An exit section is not a ladder connection!**

Notice:
Many years of experience lead to the following recommendations:

- use ladder sections with a length of at least 1680 mm to ensure that every ladder section automatically will have at least one mounting bracket
- ladder sections with a length shorter than 1680 mm shall preferably be used in the beginning of the system
- the last ladder section should be installed using two mounting brackets
- Should an existing system have to be extended with a ladder section shorter than 1680 mm, do not install that section at the end of the system but rather between two already installed taller sections.

Sperian Fall Protection Deutschland GmbH & Co. KG, D-95015 Hof-Bavaria, P. O. B. 1646, Phone +49/9281/8302-0, Fax +49/9281/3626, soell@sperianprotection.com

Warning:
Using a recommended mounting distance between brackets of 1.400 mm up to a max. of 1.680 mm, the minimum number of mounting brackets on a Söll safety ladder system must not be less than four! (eg. on a system with just 1 ladder section.)

Exceptions:
For ladder sections with a max. length of 2240 mm the use of two mounting brackets is acceptable. For sections up to 3920 mm a minimum of three brackets shall be used. Make sure that the mounting brackets used (and their support structure) are suited to absorb a load of 6 kN. (see sect. B 10)

Fig. 2a

Version: Steel

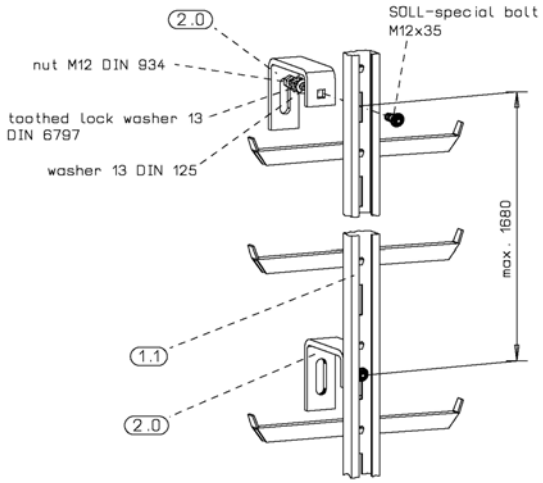

Version: Stainless steel

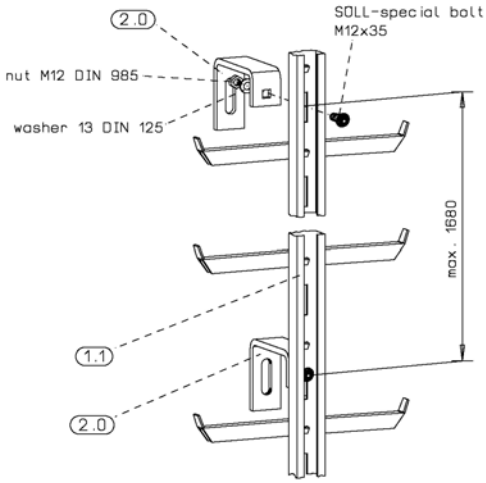

Sperian Fall Protection Deutschland GmbH & Co. KG, D-95015 Hof-Bavaria, P. O. B. 1646, Phone +49/9281/8302-0, Fax +49/9281/3626, soell@sperianprotection.com

Fig. 2b **Mounting distance: 1680 mm**

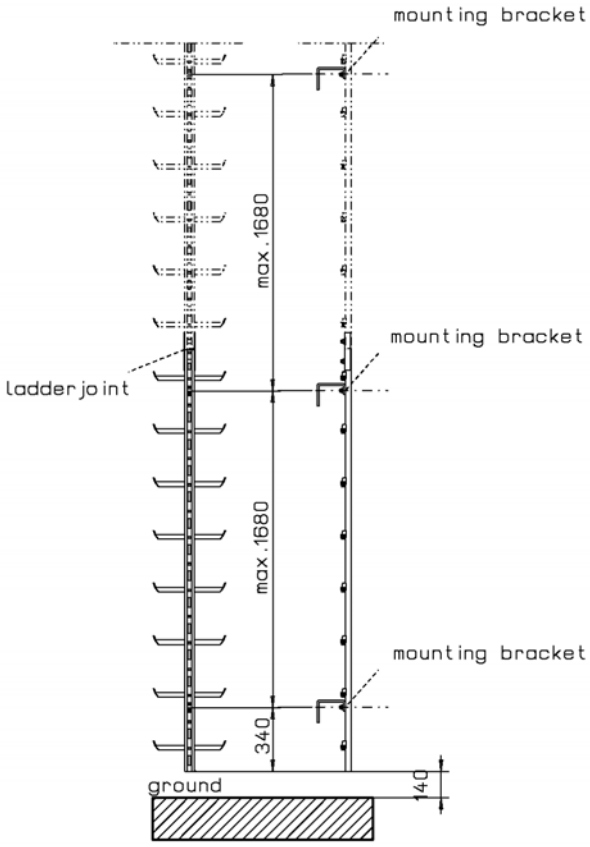

Fig. 2c **Mounting distance: 1120 mm**

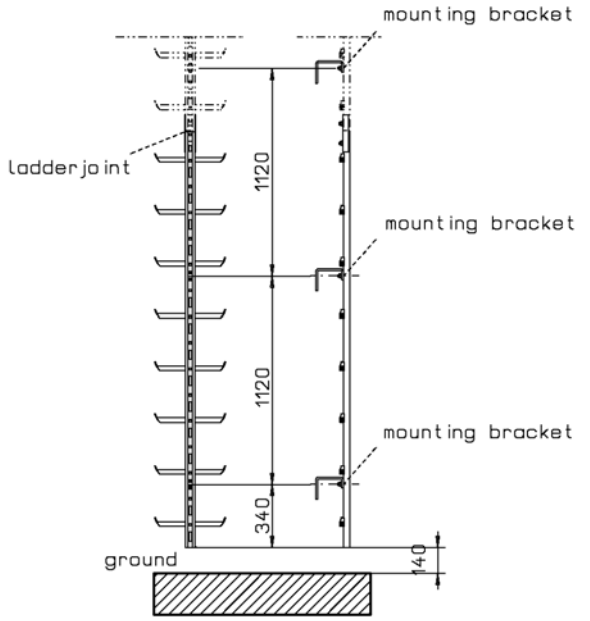

Sperian Fall Protection Deutschland GmbH & Co. KG, D-95015 Hof-Bavaria, P. O. B. 1646, Phone +49/9281/8302-0, Fax +49/9281/3626, soell@sperianprotection.com

B 17. **Torque ranges:**

When tightening mounting screws in **steel quality 8.8** used in combination with tooth lock washers the following tightening torque range is recommended:

Screw size:	M 10	M 12	M 16	M 20
	20 Nm	25 Nm	60 Nm	120 Nm

When tightening mounting screws in **stainless steel quality 1.4571** in combination with Söll supplied auto-locking nuts (DIN 985) the following torque range is recommended:

Screw size:	M 10	M 12	M 16	M 20
	40 Nm	45 Nm	85 Nm	150 Nm

Fig. 3

B 18. The first ladder section with red plastic ribbon (3.0) and notches (1.2) pointing upwards is put onto the mast. The mounting bracket (2.0) is attached to the structure with the appropriate wall anchorage bolt. The ladder section is brought in vertical line by means of oblong holes (2.1) in the brackets. Make sure that bolts are properly secured (see Section F).

Warning:
The red ribbon plastic (3.0) at the top of each ladder section is not an end stop!
It will not prevent the fall arrester from slipping out of the rail!

Fig. 3

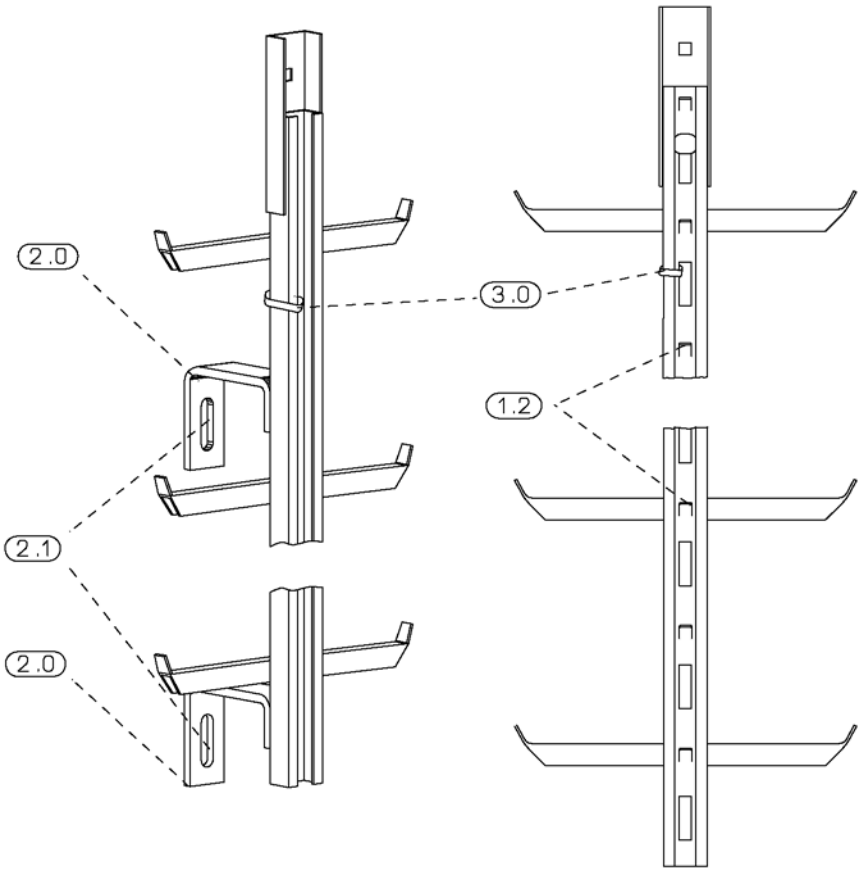

Sperian Fall Protection Deutschland GmbH & Co. KG, D-95015 Hof-Bavaria, P. O. B. 1646, Phone +49/9281/8302-0, Fax +49/9281/3626, soell@sperianprotection.com

Fig. 4

B 19. In case the „bottom end stop“ (4.0) has not already been mounted by the manufacturer, than it must be fixed with the guide rail (1.1) from the rear through the oblong hole so that the „bottom end stop“ (4.0) is at least 260 mm and 575mm at a maximum above the recess (1.3). The locking bolt (4.1) of the end stop must be on the right side of the guide rail (1.1).

The "Bottom End Stop" **prevents the fall arrester from being inserted incorrectly** and **from accidentally sliding out of the rail**.

Fig. 4

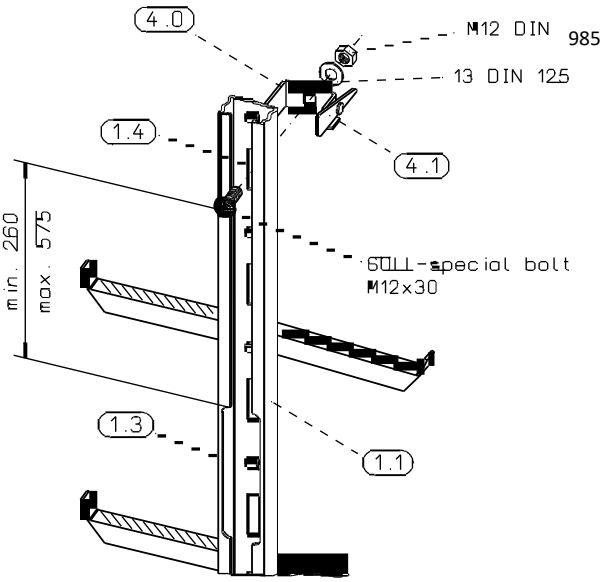

Fig. 5

B 20. In case there is no recess, the „bottom end stop“ (4.0) must be mounted in the oblong hole **above the 2nd. notch** (1.2). In this case, please make sure that the locking bolt (4.1) is on the right side of the guide rail (1.1)

Fig. 5

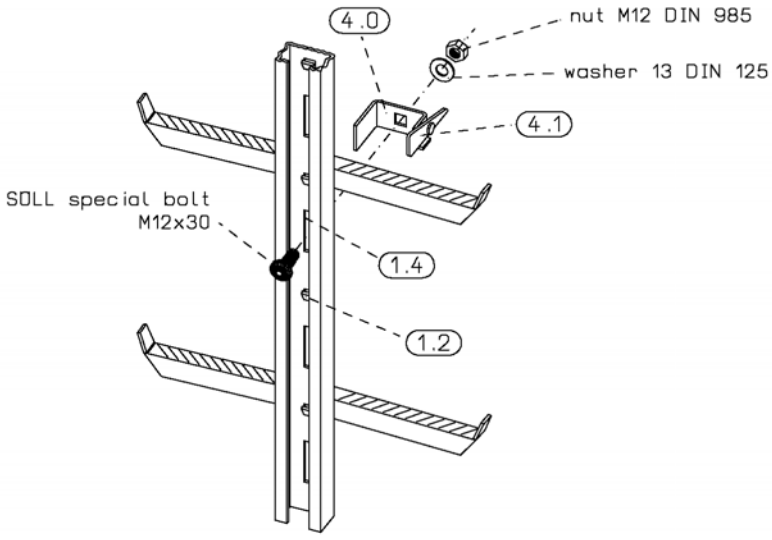

Sperian Fall Protection Deutschland GmbH & Co. KG, D-95015 Hof-Bavaria, P. O. B. 1646, Phone +49/9281/8302-0, Fax +49/9281/3626, soell@sperianprotection.com

Warning:
In order to prevent the incorrect insertion of the **fall arrester**, it must only be inserted **after** the **„Bottom End Stop“** has been installed.

Warning:
The red PVC-strap (see fig. 3/det. 3.0) must only be surpassed with a fall arrester when the next ladder section:
- is properly connected to the lower ladder section
- and is attached to the support structure by means of at least one mounting bracket.

During the installation work the fall arrester must never pass the last bracket that has been properly attached to the support structure (refer to item B 14/B 15).

B 21. **Special case:**
If a vertical ladder is not mounted directly at ground level, 2 „lower ascending locks“ must be fitted:
- The first (A) directly at the beginning, above the 2nd. notch of the ladder, in order to prevent incorrect attachment of the fall arrester (see also Point B 19., B 20.),
  and
- the other (B) at a height of approx. 1,600 mm, in order to prevent the operator from losing his footing when descending.

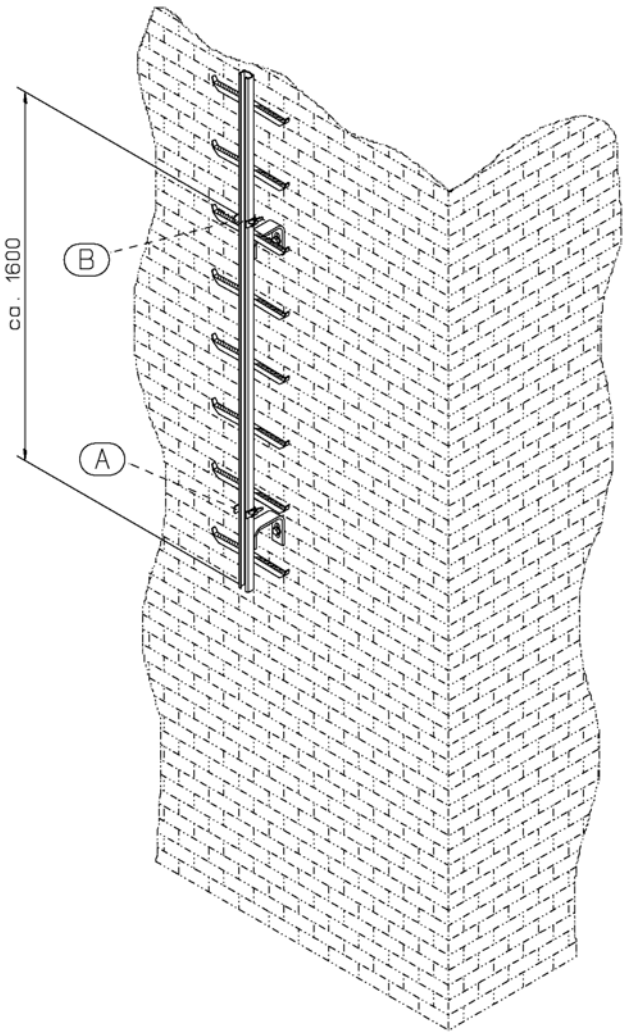

Sperian Fall Protection Deutschland GmbH & Co. KG, D-95015 Hof-Bavaria, P. O. B. 1646, Phone +49/9281/8302-0, Fax +49/9281/3626, soell@sperianprotection.com

Fig.6

B 22. **The next ladder section to mount must be rested against the structure and inserted vertically into the ladder section which has already been fixed.**

Fig. 6

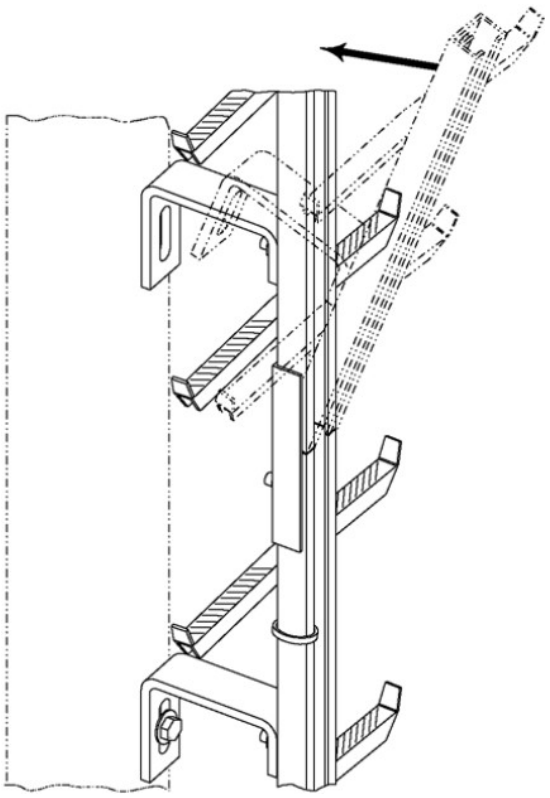

Sperian Fall Protection Deutschland GmbH & Co. KG, D-95015 Hoi-Bavaria, P. O. B. 1646, Phone +498281!8302 0, Fax+49/9281!3626, soel@sperianprotection.com

B 23. **Minimum Gap Width**:

Mounting recommendations:

- Under positive ambient temperature, gap width 2 mm
- Under negative ambient temperature, gap width 3 mm
- During re-exanimation, make sure that the maximum gap width of 5 mm is not exceeded (independently from the ambient temperature)

Fig. 7

B 24. Insert the upper bolt (5.0) of the rail connector (6.0) as shown. The nut should only be tightened when the added ladder section is in alignment to the lower one and at least one bracket of the upper section has been fixed. Secure bolt.

Fig. 7

Version: steel

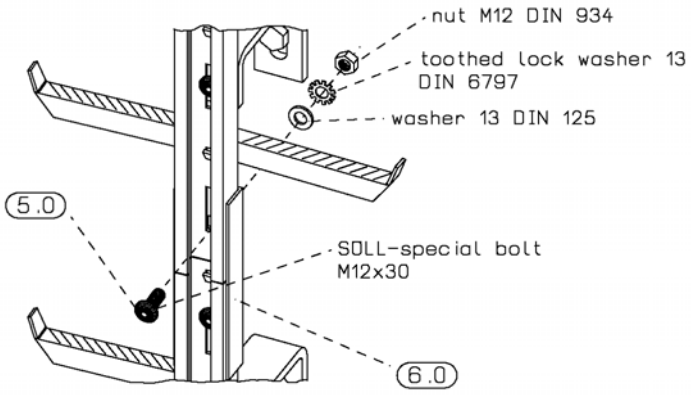

Version: stainless steel

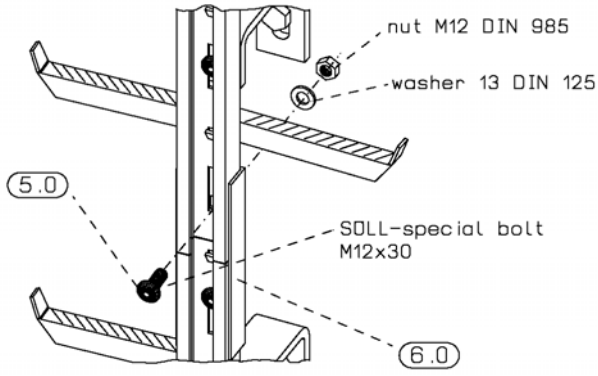

B 25. **Now** cut plastic ribbon (Fig. 3/Detail 3.0) of the lower ladder section.

Note:
The bolts pre-assembled in the plant must also be secured!

Sperian Fall Protection Deutschland GmbH & Co. KG, D-95015 Hof-Bavaria, P. O. B. 1646, Phone +49/9281/8302-0, Fax +49/9281/3626, soell@sperianprotection.com

B 26. During the installation work ensure that:

- in the **X-direction** ladder sections are **vertically** installed
- in the **Y-direction** ladder sections are located int eh range of **0° bis 15°**.

Exception:
In case of curved systems follow angle directions given in **chapter D** !

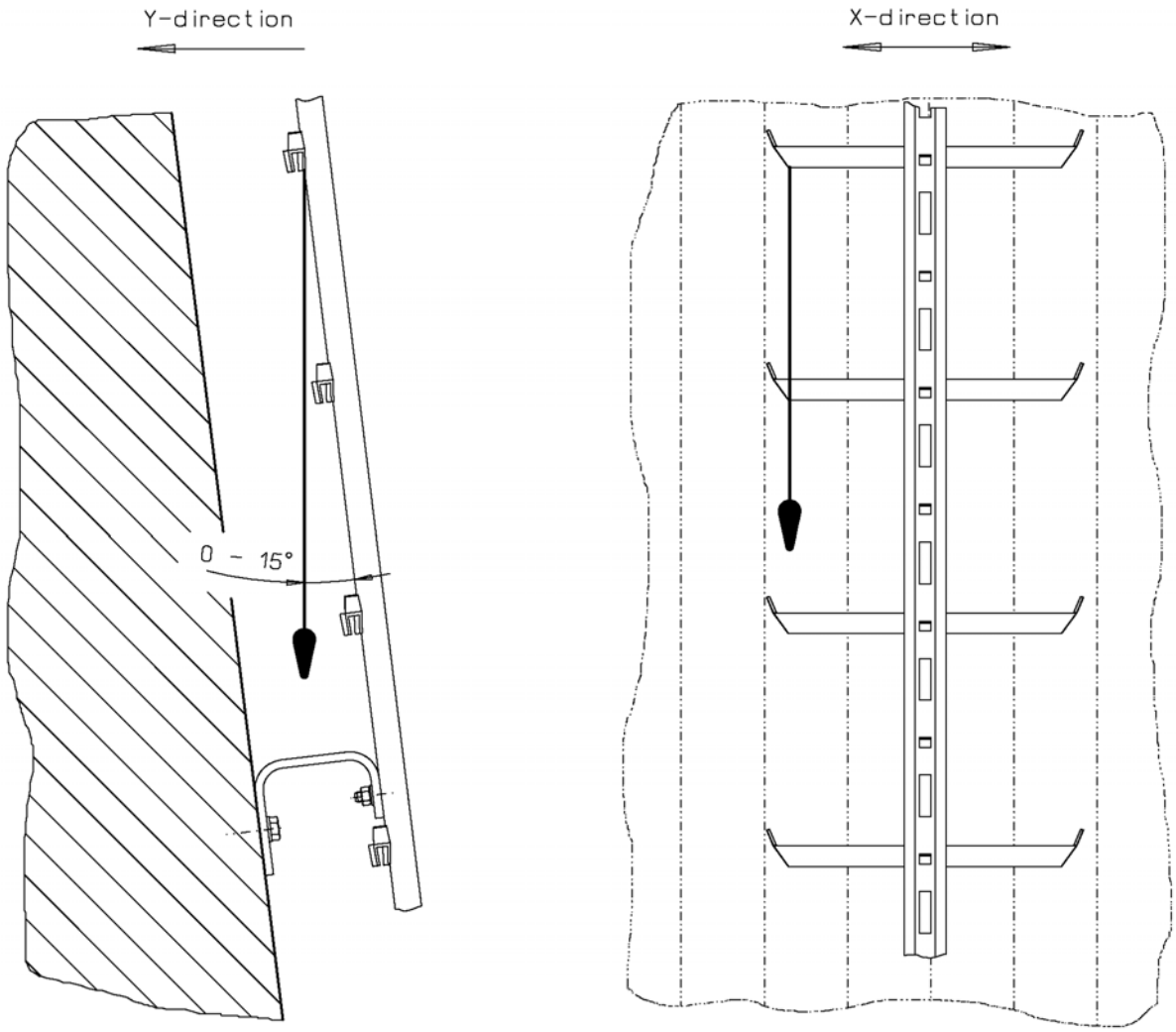

Sperian Fall Protection Deutschland GmbH & Co. KG, D-95015 Hof-Bavaria, P. O. B. 1646, Phone +49/9281/8302-0, Fax +49/9281/3626, soell@sperianprotection.com

Fig. 8

B 27. **Caution:**
When the climbing path ends on a platform, the ladder must rise at least 1000 mm above the upper edge of the platform. For design reasons the guide rail of the ladder must be reinforced if, at the end of the ladder run, the guide-rail rises more than 380 mm above the last mounting bracket. **Projections of more than 380 mm without extra reinforcement are not permitted**.

Warning:
Unsupported ladder sections with a length of more than 380 mm are not allowed without reinforcement profiles!

When installing the stainless steel / hot dip galvanized steel reinforecement profile 50 x 30 x 3 mm the following shall be noted:

- the reinforcement profile shall be connected to the ladder from the rear at intervals of 560 mm
- the reinforcement profile must extend downwards over at least two mounting brackets
- along the total length of the reinforcement profile no ladder joints are allowed
- the reinforcement profile must be in one section only

Fig. 8

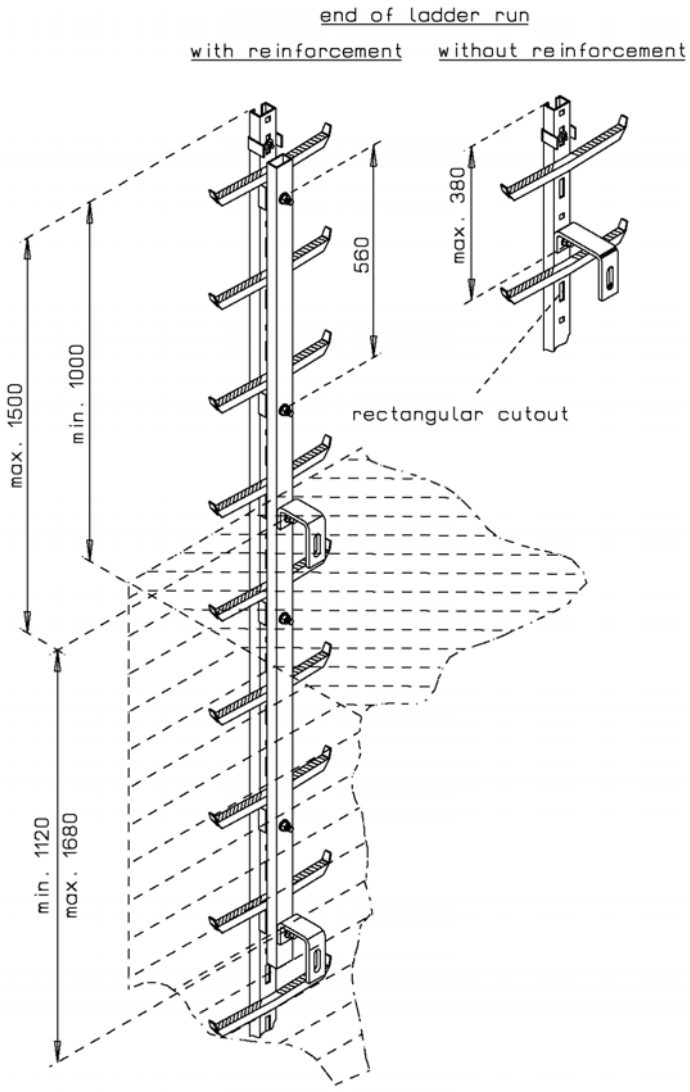

Sperian Fall Protection Deutschland GmbH & Co. KG, D-95015 Hof-Bavaria, P. O. B. 1646, Phone +49/9281/8302-0, Fax +49/9281/3626, soell@sperianprotection.com

Fig. 9a and 9b

B 28. At the upper end of the climbing path at least the "Top End Stop" (7.0), normally the "Rigid End Stop" (8.0) must be fitted to the uppermost **complete** rectangular cut out (1.4) of the guide-rail, as shown. **The top end stop prevents the fall arrester from being inserted incorrectly and from accidentally sliding out of the rail**. In order to release the fall arrester, the pivotable lever (7.1) of the top end stop must be lowered. **The rigid end stop (8.0) generally prevents the fall arrester from being taken out of the guide-rail**.

Caution:
The "Top End Stop" must be installed in such a way, that the pivotable lever (Fig. 9a/detail 7.1) is to the right hand side of the rail. The "Rigid End Stop" must be installed in such a way that both of its sides (Fig. 9b/detail 8.1) embrace the rail from the front as shown.

Fig. 9a

"Top End Stop“

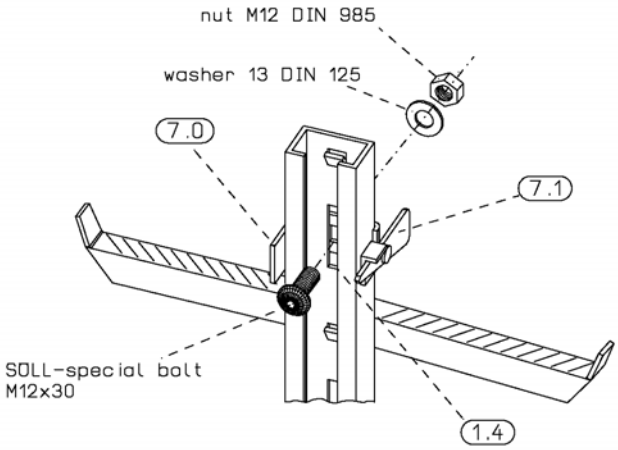

Fig. 9b

"Rigid End Stop“

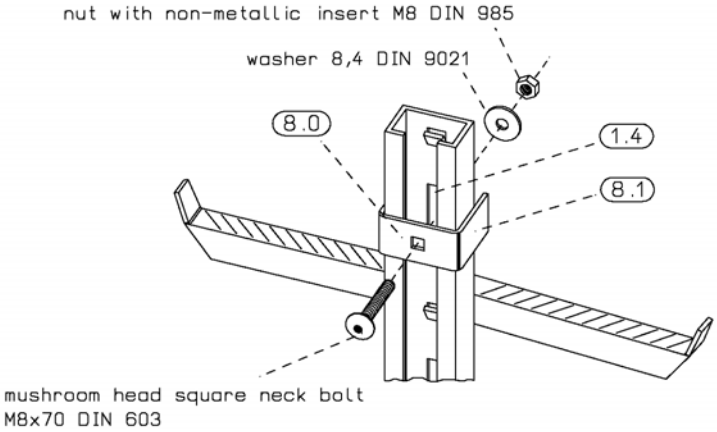

Sperian Fall Protection Deutschland GmbH & Co. KG, D-95015 Hof-Bavaria, P. O. B. 1646, Phone +49/9281/8302-0, Fax +49/9281/3626, soell@sperianprotection.com

Fig 10a und 10b

B 29. Mounting of foot rests (9.0) (10.0) **<u>without</u>** spar support

Version: Steel, hot-dip-galvanized, part No. 23723
If included in the delivery, the hinge (9.1) must be fixed on the central spar (1.1) through the oblong hole **about** the rung (1.5) by means of the included Söll – special bolt M12x35. The fixation (9.2) must show in the same oblong hole about the rung.

Fig. 10a

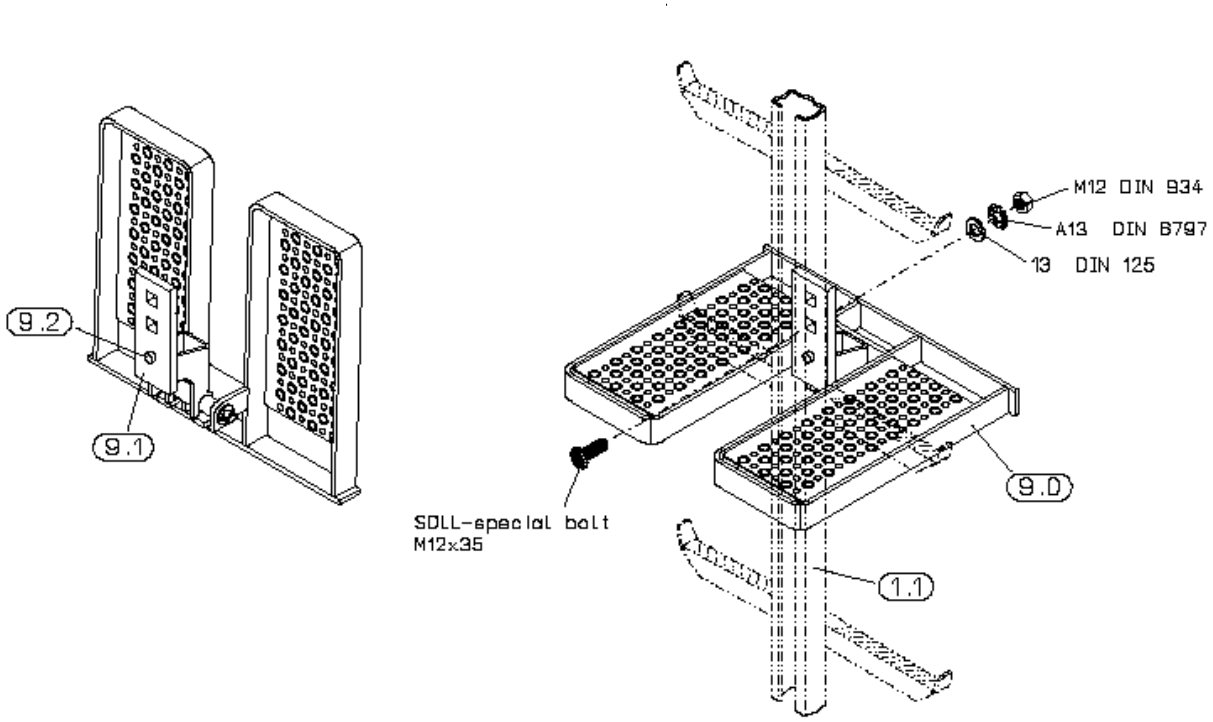

<u>Installation hint:</u>
The folded down footrest shall rest upon the rung (1.5) !

Note!
Install rest platforms as local regulations may require.

Sperian Fall Protection Deutschland GmbH & Co. KG, D-95015 Hof-Bavaria, P. O. B. 1646, Phone +49/9281/8302-0, Fax +49/9281/3626, soell@sperianprotection.com

Version: Stainless steel, part No. 17249
If included in the delivery, the hinge (10.1) must be fixed on the central spar (1.1) through the oblong hole **underneath** the rung (1.5) by means of the included Söll – special bolt M12x35.
The fixation (10.2) must show in the same oblong hole underneath the rung.

Fig. 10b

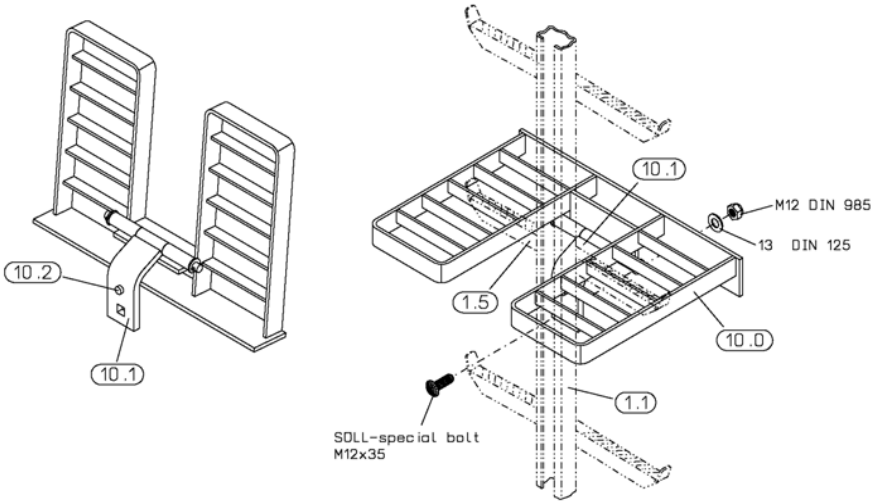

Installation hint:
The folded down footrest shall rest upon the rung (1.5) !

Note!
Install rest platforms as local regulations may require.

Sperian Fall Protection Deutschland GmbH & Co. KG, D-95015 Hof-Bavaria, P. O. B. 1646, Phone +49/9281/8302-0, Fax +49/9281/3626, soell@sperianprotection.com

Fig 11a und b

B 30. Installation of foot rests (11.0) **<u>with</u>** spar support

Version: Steel, hot-dip-galvanized, part No. 23980
If included in the delivery, the hinge (11.1) (12.1) is to be fixed on the central spar (1.1) by means of the Söll special bolt M12x80 through the oblong hole **above** the rung (1.5). For this purpose, a hole of 13mm ⌀ must be drilled before assembling in the spar support at the same height of the oblong hole. The distance piece (11.2) must be fixed between the central spar and the spar support.

<u>Fig. 11a</u>

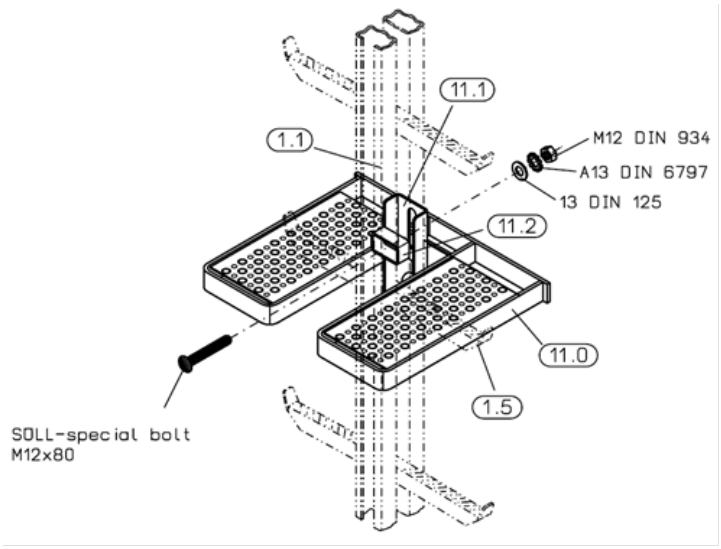

Version: Stainless steel, part No. 22395

<u>Fig. 11b</u>

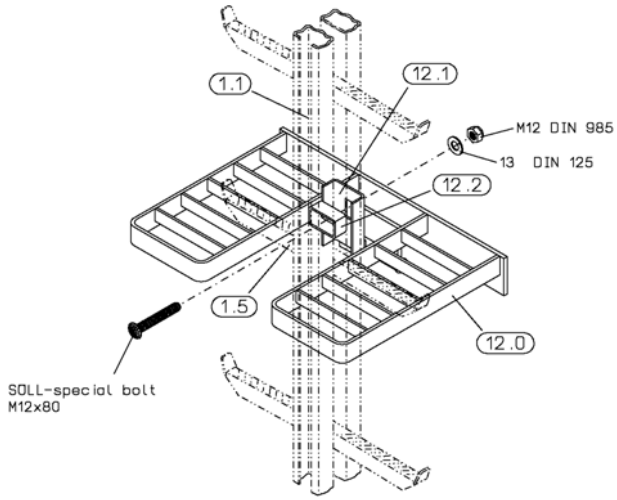

<u>Installation hint:</u>
The folded down footrest shall rest upon the rung (1.5) !

Note!
Install rest platforms as local regulations may require.

Sperian Fall Protection Deutschland GmbH & Co. KG, D-95015 Hof-Bavaria, P. O. B. 1646, Phone +49/9281/8302-0, Fax +49/9281/3626, soell@sperianprotection.com

C Information regarding curves

C 1. For aluminium ladders the below are the smallest possible bending radiae:

Type Y-spar (YAL)	3000 mm
Type twin ladder (ZAL)	3000 mm

C 2. Curve types

Fig 12

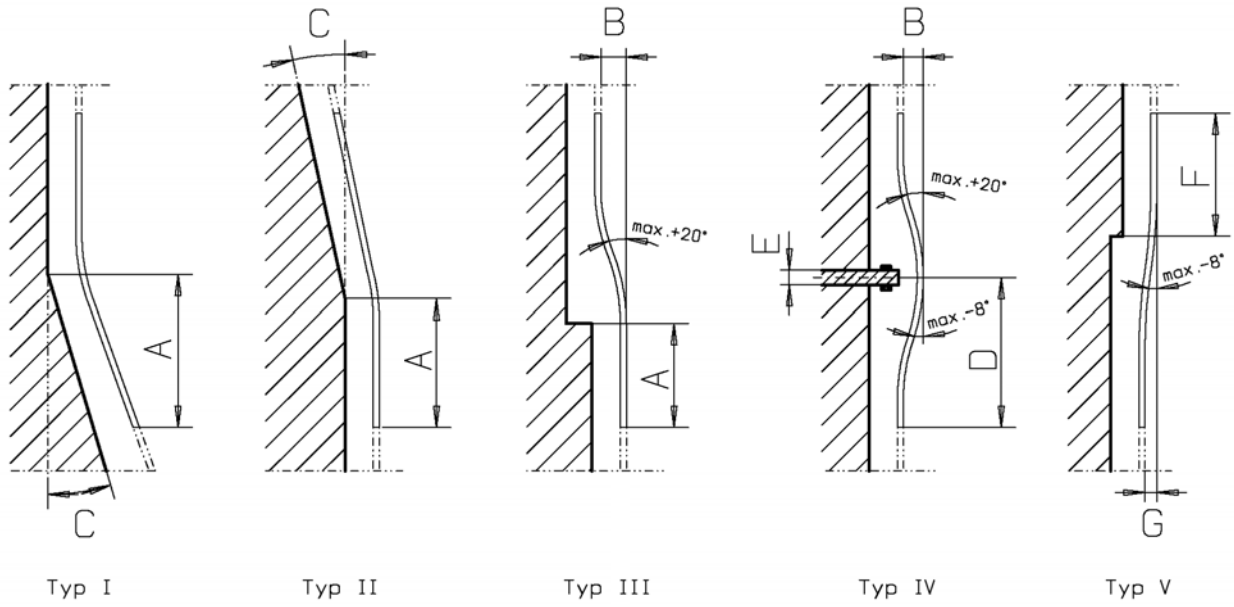

A = Bottom edge of ladder to salient point of structure
B = Of-set
C = Angle (**max. 15°**)
D = Bottom edge to centre of obstruction
E = Width of obstruction
F = Upper edge of ladder to off-set
G = Of-set **(max 260 mm)**

C 3. For fall arrest sytems type **""Söll-GlideLoc"**™**"** the following are the maximum permissible curve angels:

Curve type	max. curve angel
Ⅱ	+ 20 °
Ⅳ	- 8 ° up to + 20 °
V	- 8 °

Sperian Fall Protection Deutschland GmbH & Co. KG, D-95015 Hof-Bavaria, P. O. B. 1646, Phone +49/9281/8302-0, Fax +49/9281/3626, soell@sperianprotection.com

D Inspection and approval

Note:
Particular attention is required when ascending and descending the first 2 m of ladder, as it may not be possible to prevent the user from falling to the ground.

Both before and during use, consideration should be given to how rescue operations can be performed safely and effectively.

A fall protection device according to EN 353 Part 1 should only be used by persons who
- have been trained and/or are otherwise proficient in its use, or
- are under the direct supervision of a person who has been trained and/or is otherwise proficient in its use.

Sperian Fall Protection Deutschland GmbH & Co. KG, D-95015 Hof-Bavaria, P. O. B. 1646, Phone +49/9281/8302-0, Fax +49/9281/3626, soell@sperianprotection.com

Fig. 13
At the "OK to climb" inspection the following details have to considered:

- Every ladder section needs to have at least one mounting bracket
- The connection between two ladder sections must be flush and smooth
- In the **X-direction** ladder section shall be **vertical**
- In the **Y-direction** the angle between the vertical line and the ladder sections may range from **0° bis 15°**. (Exception: in the area near bends)
- Curves must be made in accordance with instructions in chapter C.
- Always check the following screw connections:
  - mounting bracket to support structure
  - mountig bracket to ladder rail
  - connections between ladder sections
  - attachment of end stops to rail
- all screw connections have to be properly tightened and secured against unintended opening (refer to section E). Even bolts pre-assembled in the factory must be checked and secured where appropriate.
- the stop lever in end stops must automatically fall into lock position.

Note:
Installer shall agree with system owner about the necessary quantity of fall arresters (e.g. Compact) needed. Every system shall include at least two fall arresters.

Fig. 13

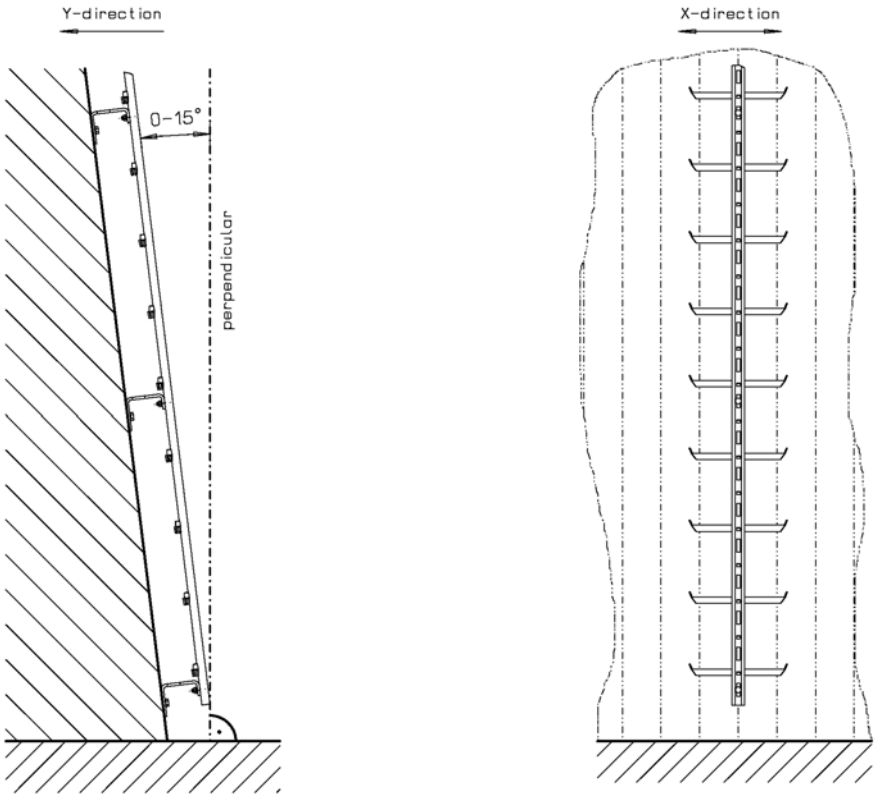

Sperian Fall Protection Deutschland GmbH & Co. KG, D-95015 Hof-Bavaria, P. O. B. 1646, Phone +49/9281/8302-0, Fax +49/9281/3626, soell@sperianprotection.com

E Bolt connections/securing of bolts

At use of hot dip galvanised screws the tooth washer ensures satisfactory securing of the screw/nut connection.

At use of stainless steek screws self-locking nuts (nyloe or similar) shall be used.

F Maintenance

Warning:
The fall arrest system must not be used if defects have been noted or in case of doubts as to its proper function. Before further use an inspection by a competent person is needed or the defective parts have to be replaced.

F 1. Fall arrest systems shall as need arises, however at least once per year be inspected and approved by competent person.

Exceptions:
Rigid type fall arrest systems with a guided fall arrester should be inspected as need arises by a competent person.

Competent person is a:
person who thanks to his eduction and experience in the field of personal protective equipment against falls from height has sufficient knowledge about applicable state and local safety regulations, applicable standards (e.g. EN-standards) and is thus capable and thus authorized by Söll of judging the correct status and use of systems and products against falls from height.

F 2. Fall arresters must be examined by a competent person at least once a year and after every fall incident. In such cases refer to the relevant instructions of the fall arrester.

F 3. Check the proper condition and functionning of all elements of the fall protection system before and during use.

F 4. The end stops (Fig. 4/detail 4.0; Fig. 9a/b/detail 7.0/8.0) at the lower and upper end of the climbing path must have been installed. The pivotable lever (Fig. 4/detail 4.1; Fig. 9a/detail 7.1) at the right hand side of the rail must independently snap back into its initial position and thus block the fall arrester.

F 5. Guide-rails must always be free of dirt.

F 6. All bolt connections must be tightly fastened and secured, see section E.

Sperian Fall Protection Deutschland GmbH & Co. KG, D-95015 Hof-Bavaria, P. O. B. 1646, Phone +49/9281/8302-0, Fax +49/9281/3626, soell@sperianprotection.com

F 7. At every location of a fall arrest system where a fall arrester may be connected or disconnected to the system a permanent sign board with the following information shall be displayed:

- Year of manufacture
- System manufacturer´s or importer´s name
- Type of fall system e.g. DIN EN 353-1
- "Anyone using the system shall use a full body safety harness and an appropriate fall arrester"

Note: Sign Boards may consist of stamped aluminium plates.

Sperian Fall Protection Deutschland GmbH & Co. KG, D-95015 Hof-Bavaria, P. O. B. 1646, Phone +49/9281/8302-0, Fax +49/9281/3626, soell@sperianprotection.com

Further Remarks

SperianFallProtectionDeutschland GmbH & Co. KG, D-99J15 Hof-Bavaria, P. O. B. 1646, Phone+49/9281/B302-0, Fax+4919281.8626, soell@sperianprotection.com

G Check list for the inspection and approval of Söll-"Söll-GlideLoc" fall arrest systems

Hot Dip Galvanized Steel Part No. YST
Pickled Stainless Steel Part No. YA4

The check list on pages 28-30 must be fully and correctly compiled by the chief engineer of the installing company by means of an indelible pen. He is responsible for the correctness of all the information provided therein. Any checkpoint with a "No" remark must be explained under the defects, irregularities on page 30.

Control Activity	**Remarks** (please cross) yes	no
• Every ladder section uses at least one mounting bracket. (see section B 16)	☐	☐
• The mounting distance of the brackets does not exceed 1680 mm and complies with section B 16.	☐	☐
• The gaps at the guide-rail joints comply with section B 23.	☐	☐
• The bolt connections between structure and mounting elements comply with sections B 8, B 9 and B 10.	☐	☐
• The mounting elements are correctly installed and all bolt connections are tightly fastened. (tightening torques as per section B 17 are used)	☐	☐
• Even screwed connections pre-assembled in the factory were inspected (for tightening torques see Section B 17)	☐	☐
• All bolt connections are secured against loosening in accordance with section D.	☐	☐
• A "Bottom End Stop" has been installed at the beginning of the climbing path in accordance with sections B 19/20.	☐	☐
• A "Top End Stop" or a "Rigid End Stop" has been installed at the upper end of the climbing path in accordance with section B 28.	☐	☐
• If the ascent route does not start directly at ground level, 2 ascending locks must be fitted as described in Section B 21.	☐	☐
• Resting platforms have been properly installed at a distance of 10 m and were tested for function.	☐	☐
• In accordance with section B27 there are no rail projections of more than 380 mm without extra reinforcement.	☐	☐
• The rail reinforcement was installed in accordance with section B 27.	☐	☐
• The guide-rails are free of dirt.	☐	☐
• Only anticorrosive, or hot dip galvanized mounting elements and bolt connections have been used.	☐	☐
• The SÖLL fall arrester can only be inserted into the guide-rail in the direction in which it travels.	☐	☐
• System owner has at least two Söll fall arresters.	☐	☐
• A Söll-system sign is posted.	☐	☐

Sperian Fall Protection Deutschland GmbH & Co. KG, D-95015 Hof-Bavaria, P. O. B. 1646, Phone +49/9281/8302-0, Fax +49/9281/3626, soell@sperianprotection.com

- Test climbing has taken place. ☐ ☐
- This manual was handed over to the operator. ☐ ☐
- Only original components from Sperian Fall Protection Deutschland GmbH & Co. KG were used. ☐ ☐

Please turn over!

Sperian Fall Protection Deutschland GmbH & Co. KG, D-95015 Hof-Bavaria, P. O. B. 1646, Phone +49/9281/8302-0, Fax +49/9281/3626, soell@sperianprotection.com

Installation Site: _____

Owner:	_____	**Installing company:**	_____
Street:	_____	**Street:**	_____
City:	_____	**City:**	_____
Telephone:	_____	**Telephone:**	_____
Fax:	_____	**Fax:**	_____

Manual handed over to: _____

name (site operator or representative) signature

Chief engineer of the installing company: _____

name signature

Place: _____ Date: _____

Defects, irregularities and deviations from the checklist must be noted here:

Noted defects/shortcomings	competent person/installer	signature	date

Sperian Fall Protection Deutschland GmbH & Co. KG, D-95015 Hof-Bavaria, P. O. B. 1646, Phone +49/9281/8302-0, Fax +49/9281/3626, soell@sperianprotection.com

KANON
LOADING EQUIPMENT

Installation, Operating and Maintenance manual

Section 9
Hydraulic Electric system.

Control panel for 2 MLA

Identity No.	Description	Designation	Client Tag Number
P242068A10	Loading arm LA1	+MLA-A	
P242068B10	Loading arm LA2	+MLA-B	

Index	Revision	Date	name			
3	Final as built	19-3-2025	M.Besseling	Drawn:	31-10-2024	elshofjo
2	Final for production	22-11-2024	besselingmi	Engineer:	19-9-2024	besselingmi
1	For approval	13-11-2024	besselingmi	Approved:		
				Changed:		

KANON LOADING EQUIPMENT B.V.

Ref: P242068, B242352 Quote:

Order: 2011280786 Item: 001000

www.kanon.nl

Electromach B.V.
Jan Tinbergenstraat 193
7559 SP Hengelo
The Netherlands

Cover sheet

Int. Revision : P242068A91

Drawing No. 2011280786-001000-24

Scale: 1 mm : 1 mm / A3

Refer to protection notice ISO 16016

Sheet: 0

Index

▲ Sheet number	Comment	Additional Comment	Associated Equipment	Internal Revision	Version index 1	Version index 2	Version index 3	Version index 4
0	Cover sheet				3	2	1	
1	Index				3	2	1	
5	Specification Sheet	Specification Sheet			3	2	1	
8	Overall view	Control system	+JETTY		2	1		
9	Overall view	Control system	+JETTY		2	1		
11	Overall view	Loading arm LA1	+MLA-A		2	1		
11.1	Cabling (IS signals)	Loading arm LA1	+MLA-A		2	1		
11.2	Cabling (IS signals)	Loading arm LA1	+MLA-A		3	2	1	
11.3	Cabling (solenoids)	Loading arm LA1	+MLA-A		2	1		
11.4	Cabling (solenoids)	Loading arm LA1	+MLA-A		2	1		
12	Overall view	Loading arm LA2	+MLA-B		2	1		
12.1	Cabling (IS signals)	Loading arm LA2	+MLA-B		2	1		
12.2	Cabling (IS signals)	Loading arm LA2	+MLA-B		3	2	1	
12.3	Cabling (solenoids)	Loading arm LA2	+MLA-B		2	1		
12.4	Cabling (solenoids)	Loading arm LA2	+MLA-B		2	1		
20	List of cables				2	1		
21	Layout	+JOCC	+JOCC		2	1		
22.1	Layout	-ECB1 front	+JOCC -ECB1		3	2	1	
22.2	Layout	-ECB1 internal	+JOCC -ECB1		3	2	1	
22.3	Layout	-ECB1 top/bottom/sides	+JOCC -ECB1		2	1		
23.1	Layout	-ECB2 front	+JOCC -ECB2		3	2	1	
23.2	Layout	-ECB2 internal	+JOCC -ECB2		2	1		
23.3	Layout	-ECB2 top/bottom/sides	+JOCC -ECB2		2	1		
24.1	Layout	-DCB1 front	+JOCC -DCB1		2	1		
24.2	Layout	-DCB1 top/bottom/sides	+JOCC -DCB1		3	2	1	
24.3	Layout	-DCB1 internal	+JOCC -DCB1		2	1		
25.1	Layout	-DCB2 front	+JOCC -DCB2		2	1		
25.2	Layout	-DCB2 top/bottom/sides	+JOCC -DCB2		2	1		
25.3	Layout	-DCB2 internal	+JOCC -DCB2		2	1		
26.1	Layout	-ETB1 front	+JOCC -ETB1		2	1		
26.2	Layout	-ETB1 internal	+JOCC -ETB1		2	1		
26.3	Layout	-ETB1 top/bottom/sides	+JOCC -ETB1		2	1		
27.1	Layout	-ETB2 front	+JOCC -ETB2		2	1		
27.2	Layout	-ETB2 internal	+JOCC -ETB2		2	1		
27.3	Layout	-ETB2 top/bottom/sides	+JOCC -ETB2		2	1		
40	Parts list	+JOCC	+JOCC		2	1		
41	List of nameplates	+JOCC	+JOCC		2	1		
42	List of warning labels	+JOCC	+JOCC		2	1		
45.1	Layout	-DRB1 external	+HPP -DRB1		2	1		

Index	Revision	Date	name				
3	Final as built	19-3-2025	M.Besseling	Drawn:	31-10-2024	elshofjo
3	Final for production	22-11-2024	besselingmi	Engineer:	19-9-2024	besselingmi
3	For approval	13-11-2024	besselingmi	Approved:		
				Changed:		

KANON LOADING EQUIPMENT B.V.

Ref: P242068, B242352 Quote:

Order: 2011280786 Item: 001000

KANON LOADING EQUIPMENT

www.kanon.nl

Electromach BV
Jan Tinbergenstraat 193
7559 SP Hengelo
The Netherlands

Index

Int. Revision : P242068A91

Drawing No.: 2011280786-001000-24

Scale: 1 mm : 1 mm / A3

Refer to protection notice ISO 16016

Sheet: 1 page 1 / 8

Index

▲ Sheet number	Comment	Additional Comment	Associated Equipment	Internal Revision	Version index 1	Version index 2	Version index 3	Version index 4
45.2	Layout	-DRB1 internal	+HPP -DRB1		2	1		
45.3	Parts list	-DRB1	+HPP -DRB1		2	1		
45.4	List of nameplates	-DRB1	+HPP -DRB1		2	1		
45.5	List of warning labels	-DRB1	+HPP -DRB1		2	1		
46	Layout	Radio controller			2	1		
49.1	Layout	-Pendant	+HPP -Pendant		2	1		
49.2	Parts list	-Pendant	+HPP -Pendant		2	1		
49.3	List of nameplates	-Pendant	+HPP -Pendant		2	1		
51.1	Layout	JB1. external	+MLA-A -JB1A		2	1		
51.2	Layout	JB1. internal	+MLA-A -JB1A		2	1		
51.3	Parts list	JB1	+MLA-A -JB1A		2	1		
51.4	List of nameplates	JB1	+MLA-A -JB1A		2	1		
52.1	Layout	JB2. external	+MLA-A -JB2A		2	1		
52.2	Layout	JB2. internal	+MLA-A -JB2A		2	1		
52.3	Parts list	JB2.	+MLA-A -JB2A		2	1		
52.4	List of nameplates	JB2.	+MLA-A -JB2A		2	1		
53.1	Layout	JB3. external	+MLA-A -JB3A		2	1		
53.2	Layout	JB3. internal	+MLA-A -JB3A		2	1		
53.3	Parts list	JB3.	+MLA-A -JB3A		2	1		
53.4	List of nameplates	JB3.	+MLA-A -JB3A		2	1		
54.1	Layout	JB4. external	+MLA-A -JB4A		2	1		
54.2	Layout	JB4. internal	+MLA-A -JB4A		2	1		
54.3	Parts list	JB4.	+MLA-A -JB4A		2	1		
54.4	List of nameplates	JB4.	+MLA-A -JB4A		2	1		
55.1	Layout	JB5. external	+MLA-A -JB5A		2	1		
55.2	Layout	JB5. internal	+MLA-A -JB5A		2	1		
55.3	Parts list	JB5.	+MLA-A -JB5A		2	1		
55.4	List of nameplates	JB5.	+MLA-A -JB5A		2	1		
56.1	Layout	JB6. external	+MLA-A -JB6A		2	1		
56.2	Layout	JB6. internal	+MLA-A -JB6A		2	1		
56.3	Parts list	JB6.	+MLA-A -JB6A		2	1		
56.4	List of nameplates	JB6.	+MLA-A -JB6A		2	1		
58.1	Layout	JB8. external	+MLA-A -JB8A		2	1		
58.2	Layout	JB8. internal	+MLA-A -JB8A		2	1		
58.3	Parts list	JB8.	+MLA-A -JB8A		2	1		
58.4	List of nameplates	JB8.	+MLA-A -JB8A		2	1		
61.1	Layout	JB11. external	+MLA-A -JB11A		2	1		
61.2	Layout	JB11. internal	+MLA-A -JB11A		2	1		
61.3	Parts list	JB11.	+MLA-A -JB11A		2	1		

3	Final as built	19-3-2025	M.Besseling	Drawn:	31-10-2024	elshofjo	**KANON LOADING EQUIPMENT B.V.**		KANON LOADING EQUIPMENT	**Electromach BV**	Index
3	Final for production	22-11-2024	besselingmi	Engineer:	19-9-2024	besselingmi			www.kanon.nl	Jan Tinbergenstraat 193	
3	For approval	13-11-2024	besselingmi	Approved:			Ref: P242068, B242352	Quote:		7559 SP Hengelo	
Index	Revision	Date	name	Changed:			Order: 2011280786	Item: 001000		The Netherlands	

Int. Revision :	P242068A91
Drawing No.: 2011280786-001000-24	
Scale:	1 mm : 1 mm / A3
Refer to protection notice ISO 16016	Sheet: 1 page 2 / 8

Index

▲ Sheet number	Comment	Additional Comment	Associated Equipment	Internal Revision	Version index 1	Version index 2	Version index 3	Version index 4
61.4	List of nameplates	JB11.	+MLA-A -JB11A		2	1		
62.1	Layout	JB12. external	+MLA-A -JB12A		2	1		
62.2	Layout	JB12. internal	+MLA-A -JB12A		2	1		
62.3	Parts list	JB12.	+MLA-A -JB12A		2	1		
62.4	List of nameplates	JB12.	+MLA-A -JB12A		2	1		
64.1	Layout	JB14. external	+HPP -JB14		2	1		
64.2	Layout	JB14. internal	+HPP -JB14		2	1		
64.3	Parts list	JB14.	+HPP -JB14		2	1		
64.4	List of nameplates	JB14.	+HPP -JB14		2	1		
65.1	Layout	JB15 external	+HPP -JB15		2	1		
65.2	Layout	JB15 internal	+HPP -JB15		2	1		
65.3	Parts list	JB15	+HPP -JB15		2	1		
65.4	List of nameplates	JB15	+HPP -JB15		2	1		
66.1	Layout	JB16 external	+HPP -JB16		2	1		
66.2	Layout	JB16 internal	+HPP -JB16		2	1		
66.3	Parts list	JB16	+HPP -JB16		2	1		
66.4	List of nameplates	JB16	+HPP -JB16		2	1		
67.1	Layout	JB17 external	+HPP -JB17		2	1		
67.2	Layout	JB17 internal	+HPP -JB17		2	1		
67.3	Parts list	JB17	+HPP -JB17		2	1		
67.4	List of nameplates	JB17	+HPP -JB17		2	1		
68.1	Layout	JB18 external	+HPP -JB18		2	1		
68.2	Layout	JB18 internal	+HPP -JB18		2	1		
68.3	Parts list	JB18	+HPP -JB18		2	1		
68.4	List of nameplates	JB18	+HPP -JB18		2	1		
69.1	Layout	JB19 external	+HPP -JB19		2	1		
69.2	Layout	JB19 internal	+HPP -JB19		2	1		
69.3	Parts list	JB19	+HPP -JB19		2	1		
69.4	List of nameplates	JB19	+HPP -JB19		2	1		
75	Circuit diagram	main power supply	+JOCC -DCB1		2	1		
76	Circuit diagram	distribution 115VAC	+JOCC		2	1		
77	Circuit diagram	distribution 115VAC	+JOCC -DCB1		3	2	1	
78	Circuit diagram	distribution 115VAC	+JOCC -DCB1		2	1		
79	Circuit diagram	distribution 115VAC	+JOCC -DCB2		2	1		
80	Circuit diagram	distribution 24VDC	+JOCC		2	1		
81	Circuit diagram	distribution 24VDC	+JOCC -DCB1		2	1		
82	Circuit diagram	distribution 24VDC	+JOCC -DCB1		2	1		
86	Circuit diagram	distribution 24VDC	+JOCC -DCB2		3	2	1	
87	Circuit diagram	distribution 24VDC	+JOCC -DCB2		2	1		

Index

▲ Sheet number	Comment	Additional Comment	Associated Equipment	Internal Revision	Version index 1	Version index 2	Version index 3	Version index 4
89	Circuit diagram	control hydraulic pumps	+JOCC -DCB1		2	1		
90	Circuit diagram	PLC Rack 1 layout	+JOCC -DCB1		2	1		
91	Circuit diagram	PLC Rack 1 layout	+JOCC -DCB1		3	2	1	
93	Circuit diagram	PLC Rack 2 layout	+JOCC -DCB2		2	1		
94	Circuit diagram	PLC Rack 2 layout	+JOCC -DCB2		3	2	1	
96	Circuit diagram	safety PLC layout	+JOCC -DCB2		2	1		
97	Circuit diagram	safety PLC layout	+JOCC -DCB2		2	1		
100	Circuit diagram	PLC digital outputs	+JOCC -DCB1		2	1		
101	Circuit diagram	PLC digital outputs	+JOCC -DCB1		3	2	1	
102	Circuit diagram	PLC digital outputs	+JOCC -DCB1		3	2	1	
103	Circuit diagram	PLC digital outputs	+JOCC -DCB1		2	1		
104	Circuit diagram	PLC digital outputs	+JOCC -DCB1		3	2	1	
105	Circuit diagram	PLC digital outputs	+JOCC -DCB1		3	2	1	
106	Circuit diagram	PLC digital outputs	+JOCC -DCB1		2	1		
107	Circuit diagram	PLC digital outputs	+JOCC -DCB1		2	1		
108	Circuit diagram	PLC digital outputs	+JOCC -DCB1		3	2	1	
109	Circuit diagram	PLC digital outputs	+JOCC -DCB1		3	2	1	
110	Circuit diagram	PLC digital outputs	+JOCC -DCB1		2	1		
111	Circuit diagram	PLC digital outputs	+JOCC -DCB1		2	1		
112	Circuit diagram	PLC relay outputs	+JOCC -DCB1		2	1		
113	Circuit diagram	PLC relay outputs	+JOCC -DCB1		2	1		
114	Circuit diagram	PLC relay outputs	+JOCC -DCB1		2	1		
115	Circuit diagram	PLC relay outputs	+JOCC -DCB1		2	1		
130	Circuit diagram	PLC digital inputs	+JOCC -DCB2		2	1		
131	Circuit diagram	PLC digital inputs	+JOCC -DCB2		2	1		
132	Circuit diagram	PLC digital inputs	+JOCC -DCB2		2	1		
133	Circuit diagram	PLC digital inputs	+JOCC -DCB2		3	2	1	
134	Circuit diagram	PLC digital inputs	+JOCC -DCB2		3	2	1	
135	Circuit diagram	PLC digital inputs	+JOCC -DCB2		3	2	1	
136	Circuit diagram	PLC digital inputs	+JOCC -DCB2		3	2	1	
137	Circuit diagram	PLC digital inputs	+JOCC -DCB2		3	2	1	
138	Circuit diagram	PLC digital inputs	+JOCC -DCB2		3	2	1	
139	Circuit diagram	PLC digital inputs	+JOCC -DCB2		3	2	1	
140	Circuit diagram	PLC digital inputs	+JOCC -DCB2		3	2	1	
141	Circuit diagram	PLC digital inputs	+JOCC -DCB2		3	2	1	
142	Circuit diagram	PLC digital inputs	+JOCC -DCB2		3	2	1	
143	Circuit diagram	PLC digital inputs	+JOCC -DCB2		3	2	1	
144	Circuit diagram	PLC digital inputs	+JOCC -DCB2		3	2	1	
145	Circuit diagram	PLC digital inputs	+JOCC -DCB2		2	1		

Index

▲ Sheet number	Comment	Additional Comment	Associated Equipment	Internal Revision	Version index 1	Version index 2	Version index 3	Version index 4
146	Circuit diagram	PLC analog inputs	+JOCC -DCB2		2	1		
160	Circuit diagram	safety digital inputs	+JOCC -DCB2		3	2	1	
161	Circuit diagram	safety digital outputs	+JOCC -DCB2		2	1		
162	Circuit diagram	safety digital inputs	+JOCC -DCB2		2	1		
163	Circuit diagram	safety digital outputs	+JOCC -DCB2		2	1		
164	Circuit diagram	safety digital inputs	+JOCC -DCB2		2	1		
165	Circuit diagram	safety digital outputs	+JOCC -DCB2		2	1		
166	Circuit diagram	safety digital inputs	+JOCC -DCB2		2	1		
167	Circuit diagram	safety digital outputs	+JOCC -DCB2		2	1		
168	Circuit diagram	safety digital inputs	+JOCC -DCB2		2	1		
169	Circuit diagram	safety digital outputs	+JOCC -DCB2		2	1		
170	Circuit diagram	safety digital inputs	+JOCC -DCB2		2	1		
171	Circuit diagram	safety digital outputs	+JOCC -DCB2		2	1		
172	Circuit diagram	safety digital inputs	+JOCC -DCB2		2	1		
173	Circuit diagram	safety digital outputs	+JOCC -DCB2		2	1		
180	Circuit diagram	control HPP solenoids	+JOCC -DCB1		2	1		
185	Circuit diagram	control alarm devices	+JOCC -DCB1		2	1		
190	Circuit diagram	solenoid valves +MLA-A	+JOCC -DCB1		2	1		
191	Circuit diagram	solenoid valves +MLA-A	+JOCC -DCB1		2	1		
195	Circuit diagram	solenoid valves +MLA-B	+JOCC -DCB1		2	1		
196	Circuit diagram	solenoid valves +MLA-B	+JOCC -DCB1		2	1		
200	Circuit diagram	IS isolators +HPP	+JOCC -DCB2		3	2	1	
205	Circuit diagram	IS isolators pendant	+JOCC -DCB2		3	2	1	
206	Circuit diagram	IS isolators pendant	+JOCC -DCB2		3	2	1	
210	Circuit diagram	IS isolators +MLA-A	+JOCC -DCB2		3	2	1	
211	Circuit diagram	IS isolators +MLA-A	+JOCC -DCB2		3	2	1	
212	Circuit diagram	IS isolators +MLA-A	+JOCC -DCB2		2	1		
213	Circuit diagram	IS isolators +MLA-A	+JOCC -DCB2		2	1		
215	Circuit diagram	IS isolators +MLA-A	+JOCC -DCB2		2	1		
218	Circuit diagram	IS isolators +MLA-A	+JOCC -DCB2		2	1		
220	Circuit diagram	IS isolators +MLA-B	+JOCC -DCB2		3	2	1	
221	Circuit diagram	IS isolators +MLA-B	+JOCC -DCB2		3	2	1	
222	Circuit diagram	IS isolators +MLA-B	+JOCC -DCB2		2	1		
223	Circuit diagram	IS isolators +MLA-B	+JOCC -DCB2		2	1		
225	Circuit diagram	IS isolators +MLA-B	+JOCC -DCB2		2	1		
228	Circuit diagram	IS isolators +MLA-B	+JOCC -DCB2		2	1		
240	Circuit diagram	potential free contacts	+JOCC -DCB1		2	1		
250	Circuit diagram	+HPP - Pump, Valve	+HPP		2	1		
251	Circuit diagram	+HPP - Level, Pressure switch	+HPP		2	1		

Index	Revision	Date	name
3	Final as built	19-3-2025	M.Besseling
3	Final for production	22-11-2024	besselingmi
3	For approval	13-11-2024	besselingmi

Drawn:	31-10-2024	elshofjo	
Engineer:	19-9-2024	besselingmi	
Approved:			
Changed:			

KANON LOADING EQUIPMENT B.V.

Ref: P242068, B242352 Quote:

Order: 2011280786 Item: 001000

KANON LOADING EQUIPMENT

www.kanon.nl

Electromach BV
Jan Tinbergenstraat 193
7559 SP Hengelo
The Netherlands

Index

Int. Revision : P242068A91

Drawing No.: 2011280786-001000-24

Scale: 1 mm : 1 mm / A3

Refer to protection notice ISO 16016

Index

▲ Sheet number	Comment	Additional Comment	Associated Equipment	Internal Revision	Version index 1	Version index 2	Version index 3	Version index 4
252	Circuit diagram	+HPP - Radio receiver	+HPP		3	2	1	
254	Circuit diagram	+HPP - Pendant	+HPP		2	1		
260	Conductor bushings connection report		+JOCC -DCB1 -DD1		2	1		
261	Conductor bushings connection report		+JOCC -DCB1 -DD2		2	1		
262	Conductor bushings connection report		+JOCC -DCB1 -DD3		2	1		
270	Conductor bushings connection report		+JOCC -DCB1 -LD1		2	1		
271	Conductor bushings connection report		+JOCC -DCB2 -LD3		2	1		
272	Conductor bushings connection report		+JOCC -DCB1 -LD4		2	1		
273	Conductor bushings connection report		+JOCC -DCB1 -LD5		2	1		
274	Conductor bushings connection report		+JOCC -DCB1 -LD6		3	2	1	
275	Conductor bushings connection report		+JOCC -DCB1 -LD11		3	2	1	
276	Conductor bushings connection report		+JOCC -DCB1 -LD12		3	2	1	
277	Conductor bushings connection report		+JOCC -DCB1 -LD13		3	2	1	
278	Conductor bushings connection report		+JOCC -DCB2 -LD19		3	2	1	
279	Conductor bushings connection report		+JOCC -DCB2 -LD21		3	2	1	
280	Conductor bushings connection report		+JOCC -DCB2 -LD22		3	2	1	
281	Conductor bushings connection report		+JOCC -DCB2 -LD23		3	2	1	
282	Conductor bushings connection report		+JOCC -DCB2 -LD24		3	2	1	
290	Conductor bushings connection report		+JOCC -DCB1 -LDETH1		2	1		
291	Conductor bushings connection report		+JOCC -DCB2 -LDETH2		2	1		
293	Conductor bushings connection report		+JOCC -DCB1 -LDETH3		2	1		
300	Terminal diagram		+JOCC -ETB1 -X000		2	1		
301	Terminal diagram		+JOCC -ETB1 -X001		1			
302	Terminal diagram		+JOCC -ETB1 -X016		2	1		
303	Terminal diagram		+JOCC -ETB1 -X017		2	1		
304	Terminal diagram		+JOCC -ETB1 -X018		2	1		
305	Terminal diagram		+JOCC -ETB1 -X019		2	1		
306	Terminal diagram		+JOCC -ETB1 -X6		2	1		
307	Terminal diagram		+JOCC -ETB1 -XERC		2	1		
308	Terminal diagram		+JOCC -ETB1 -XLA1		2	1		
309	Terminal diagram		+JOCC -ETB1 -XLA2		2	1		
310	Terminal diagram		+JOCC -ETB1 -XYLA1		2	1		
311	Terminal diagram		+JOCC -ETB1 -XYLA2		2	1		
312	Terminal diagram		+JOCC -ETB1 -Xcom		2	1		
313	Terminal diagram		+JOCC -ETB2 -Xi14		3	2	1	
314	Terminal diagram		+JOCC -ETB2 -Xi15		3	2	1	
315	Terminal diagram		+JOCC -ETB2 -XiLA1		3	2	1	
316	Terminal diagram		+JOCC -ETB2 -XiLA2		3	2	1	
317	Terminal diagram		+JOCC -ETB2 -XiYLA1		3	2	1	

Index

▲ Sheet number	Comment	Additional Comment	Associated Equipment	Internal Revision	Version index 1	Version index 2	Version index 3	Version index 4
318	Terminal diagram		+JOCC -ETB2 -XiYLA2		3	2	1	
320	Terminal diagram		+JOCC -ECB1 -XCP4		2	1		
321	Terminal diagram		+JOCC -ECB1 -XCP5		2	1		
322	Terminal diagram		+JOCC -ECB1 -XETH		3	2	1	
323	Terminal diagram		+JOCC -ECB2 -X4		2	1		
324	Terminal diagram		+JOCC -ECB2 -XCP3		2	1		
330	Terminal diagram		+JOCC -DCB1 -24V		2	1		
331	Terminal diagram		+JOCC -DCB1 -115V		2	1		
332	Terminal diagram		+JOCC -DCB1 -XPE		2	1		
333	Terminal diagram		+JOCC -DCB1 -Xint1		2	1		
334	Terminal diagram		+JOCC -DCB1 -Xint2		1			
335	Terminal diagram		+JOCC -DCB1 -Xint3		1			
336	Terminal diagram		+JOCC -DCB1 -Xint11		2	1		
337	Terminal diagram		+JOCC -DCB1 -Xint24+		2	1		
338	Terminal diagram		+JOCC -DCB1 -Xint24-		2	1		
339	Terminal diagram		+JOCC -DCB1 -Xint115L		2	1		
340	Terminal diagram		+JOCC -DCB1 -Xint115N		2	1		
341	Terminal diagram		+JOCC -DCB1 -Xint-		2	1		
342	Terminal diagram		+JOCC -DCB1 -XintN		2	1		
343	Terminal diagram		+JOCC -DCB1 -XintN'		1			
344	Terminal diagram		+JOCC -DCB1 -Xint6		1			
345	Terminal diagram		+JOCC -DCB2 -XPE		2	1		
346	Terminal diagram		+JOCC -DCB2 -Xint10		2	1		
347	Terminal diagram		+JOCC -DCB2 -Xint12		2	1		
348	Terminal diagram		+JOCC -DCB2 -Xint24+		2	1		
349	Terminal diagram		+JOCC -DCB2 -Xint24-		2	1		
350	Terminal diagram		+JOCC -DCB2 -Xint115L		2	1		
351	Terminal diagram		+JOCC -DCB2 -Xint115N		2	1		
352	Terminal diagram		+JOCC -DCB2 -Xint-		2	1		
353	Terminal diagram		+JOCC -DCB2 -XintN		2	1		
354	Terminal diagram		+HPP -JB14 -X14		2	1		
355	Terminal diagram		+HPP -JB15 -X15		2	1		
356	Terminal diagram		+HPP -JB16 -X16		2	1		
357	Terminal diagram		+HPP -JB17 -X17		2	1		
358	Terminal diagram		+HPP -JB18 -X18		2	1		
359	Terminal diagram		+HPP -JB19 -X19		2	1		
360	Terminal diagram		+HPP -DRB1 -X19		2	1		
361	Terminal diagram		+MLA-A -JB1A -X1		2	1		
362	Terminal diagram		+MLA-A -JB2A -X2		2	1		

Index	Revision	Date	name			
3	Final as built	19-3-2025	M.Besseling	Drawn:	31-10-2024	elshofjo
3	Final for production	22-11-2024	besselingmi	Engineer:	19-9-2024	besselingmi
3	For approval	13-11-2024	besselingmi	Approved:		
				Changed:		

KANON LOADING EQUIPMENT B.V.

Ref: P242068, B242352 Quote:

Order: 2011280786 Item: 001000

KANON LOADING EQUIPMENT

www.kanon.nl

Electromach BV
Jan Tinbergenstraat 193
7559 SP Hengelo
The Netherlands

Index

Int. Revision : P242068A91

Drawing No.: 2011280786-001000-24

Scale: 1 mm : 1 mm / A3

Refer to protection notice ISO 16016

Index

▲ Sheet number	Comment	Additional Comment	Associated Equipment	Internal Revision	Version index 1	Version index 2	Version index 3	Version index 4
363	Terminal diagram		+MLA-A -JB3A -X3		2	1		
364	Terminal diagram		+MLA-A -JB4A -X4		2	1		
365	Terminal diagram		+MLA-A -JB5A -X5		2	1		
366	Terminal diagram		+MLA-A -JB6A -X6		2	1		
367	Terminal diagram		+MLA-A -JB8A -X8		2	1		
368	Terminal diagram		+MLA-A -JB11A -X11		2	1		
369	Terminal diagram		+MLA-A -JB12A -X12		2	1		
370	Terminal diagram		+MLA-B -JB1B -X1		2	1		
371	Terminal diagram		+MLA-B -JB2B -X2		2	1		
372	Terminal diagram		+MLA-B -JB3B -X3		2	1		
373	Terminal diagram		+MLA-B -JB4B -X4		2	1		
374	Terminal diagram		+MLA-B -JB5B -X5		2	1		
375	Terminal diagram		+MLA-B -JB6B -X6		2	1		
376	Terminal diagram		+MLA-B -JB8B -X8		2	1		
377	Terminal diagram		+MLA-B -JB11B -X11		2	1		
378	Terminal diagram		+MLA-B -JB12B -X12		2	1		

3	Final as built	19-3-2025	M.Besseling	Drawn:	31-10-2024	elshofjo	**KANON LOADING EQUIPMENT B.V.**		**Electromach BV**	Index	Int. Revision : P242068A91
3	Final for production	22-11-2024	besselingmi	Engineer:	19-9-2024	besselingmi			Jan Tinbergenstraat 193		Drawing No.: 2011280786-001000-24
3	For approval	13-11-2024	besselingmi	Approved:			Ref: P242068, B242352	Quote:	7559 SP Hengelo		Scale: 1 mm : 1 mm / A3
Index	Revision	Date	name	Changed:			Order: 2011280786	Item: 001000	The Netherlands		Refer to protection notice ISO 16016 Sheet: 1 page 8 / 8

KANON LOADING EQUIPMENT
www.kanon.nl

Technical data	JOCC (Jetty Operating and Control Cabinet)	-DRB1 (Exd Control Box in HPP)
Type designation:	8264/5000-3110	8264/5325-3210
Quantity	1	1
Certificate ATEX:	KEMA 01 ATEX 2145 X	KEMA 01 ATEX 2145 X
Ex classification ATEX:	Ex II 2 (1) G Ex db eb [ia Ga] IIB T4 Gb	Ex II 2 (1) G Ex db [ia Ga] IIB T4 Gb
Certificate IECEx:	IECEx KEM07.0051X	IECEx KEM07.0051X
Ex classification IECEx:	Ex db eb [ia Ga] IIB T4 Gb	Ex db [ia Ga] IIB T4 Gb
Other certification	NA	NA
Ex classification	NA	NA
Degree of protection:	IP66	IP66
Ambient temperature:	-20°C…45°C	-20°C…45°C
Rated voltage main circuit:	400 VAC	NA
Rated current main circuit:	25 A	NA
Rated cross-section main circuit	16 mm²	NA
Rated frequency:	50 Hz	NA
Rated voltage control circuit	230 VAC	24 VDC
Rated current control circuit	10 A	2 A
Rated cross-section control circuit	6 mm²	2,5 mm²
CE marking	Yes	Yes
Label material	Thermoprint Aluminum poleyester foil	Thermoprint Aluminum poleyester foil
NICE Label no.	143297	143297
Cabinet		
Material	Aluminum (Seawater resistant acc. EN 13195-1)	Aluminum (Seawater resistant acc. EN 13195-1)
Finish color	Natural finish	Natural finish
Cable glands material	Polyamide	Brass nickel plated
Tag/nameplates		
outside:		
Material	Laminated plastic	Laminated plastic
Mounting	Stainless steel screws M3	Stainless steel screws M3
inside:		
Material	Phoenix contact component markers	Phoenix contact component markers
Mounting	selfadhesive	selfadhesive
Connection method field terminals:	Push-in, including wire end ferrules	Push-in, including wire end ferrules
Wire colours		
Main		
Phase 1	Brown	NA
Phase 2	Black	NA
Phase 3	Grey	NA
Single phase (110 ... 230VAC)	Brown	NA
Switched wire	Black	NA
Neutral (110 ... 230VAC)	Blue	NA
Control		
External voltage	Orange	Orange
Potential free	Orange	Orange
24VDC	Red	Red
Switched wire	Red	Red
0VDC	Black	Black
Intrinsically safe circuit	Blue	Blue
Grounding		
Safety ground	Green/yellow	Green/yellow
Instrument	Green	Green
Wire coding		
Material	Z-markers	Z-markers
Coding	Terminal / Contact numbering	Terminal / Contact numbering

Index	Revision	Date	name

Drawn: 31-10-2024 elshofjo
Engineer: 19-9-2024 besselingmi
Approved:
Changed:

KANON LOADING EQUIPMENT B.V.

Ref: P242068, B242352 Quote:
Order: 2011280786 Item: 001000

KANON LOADING EQUIPMENT
www.kanon.nl

Electromach B.V.
Jan Tinbergenstraat 193
7559 SP Hengelo
The Netherlands
US

Specification Sheet — P242068A91

Main drawing set

Drawing No. 2011280786-001000-24

Refer to protection notice ISO 16016

Scale: 1 mm : 1 mm / A3

Sheet: 5

+JOCC

Visual alarm

-185P1

-185P3

Audible alarm

W011

W012

-ECB1

-ECB2

-DCB1

-DCB2

-ETB1

-ETB2

+EXT

-PS000

-W000

-PS001

-W001

-CLIENT
Potential free contacts to client

-W006

-CLIENT
Modbus TCP/IP to/from client

-WCOM

-W014 — W014 /9.0D
-W015 — W015 /9.0D

-W016 — W016 /9.0D
-W017 — W017 /9.0D
-W018 — W018 /9.0D
-W019 — W019 /9.0E

-W101 — W101 /11.0E
-W102-1 — W102-1 /11.0F
-W102-2 — W102-2 /11.0F
-W102-3 — W102-3 /11.0F
-W103 — W103 /11.0F
-W104 — W104 /11.0F

-W201 — W201 /12.0E
-W202-1 — W202-1 /12.0F
-W202-2 — W202-2 /12.0F
-W202-3 — W202-3 /12.0F
-W203 — W203 /12.0F
-W204 — W204 /12.0F

Index	Revision	Date	name						
2	Final as built	19-3-2025	M.Besseling	Drawn:	31-10-2024	elshofjo	KANON LOADING EQUIPMENT B.V.		
1	For approval	13-11-2024	besselingmi	Engineer:	19-9-2024	besselingmi			
				Approved:			Ref: P242068, B242352	Quote:	
				Changed:			Order: 2011280786	Item: 001000	

KANON LOADING EQUIPMENT
www.kanon.nl

Electromach B.V.
Jan Tinbergenstraat 193
7559 SP Hengelo
The Netherlands
US

Overall view
Control system

Int. Revision :	P242068A91
Drawing No.: 2011280786-001000-24	+JETTY
Refer to protection notice ISO 16016	Scale: 1 mm : 1 mm / A3
	Sheet: 8

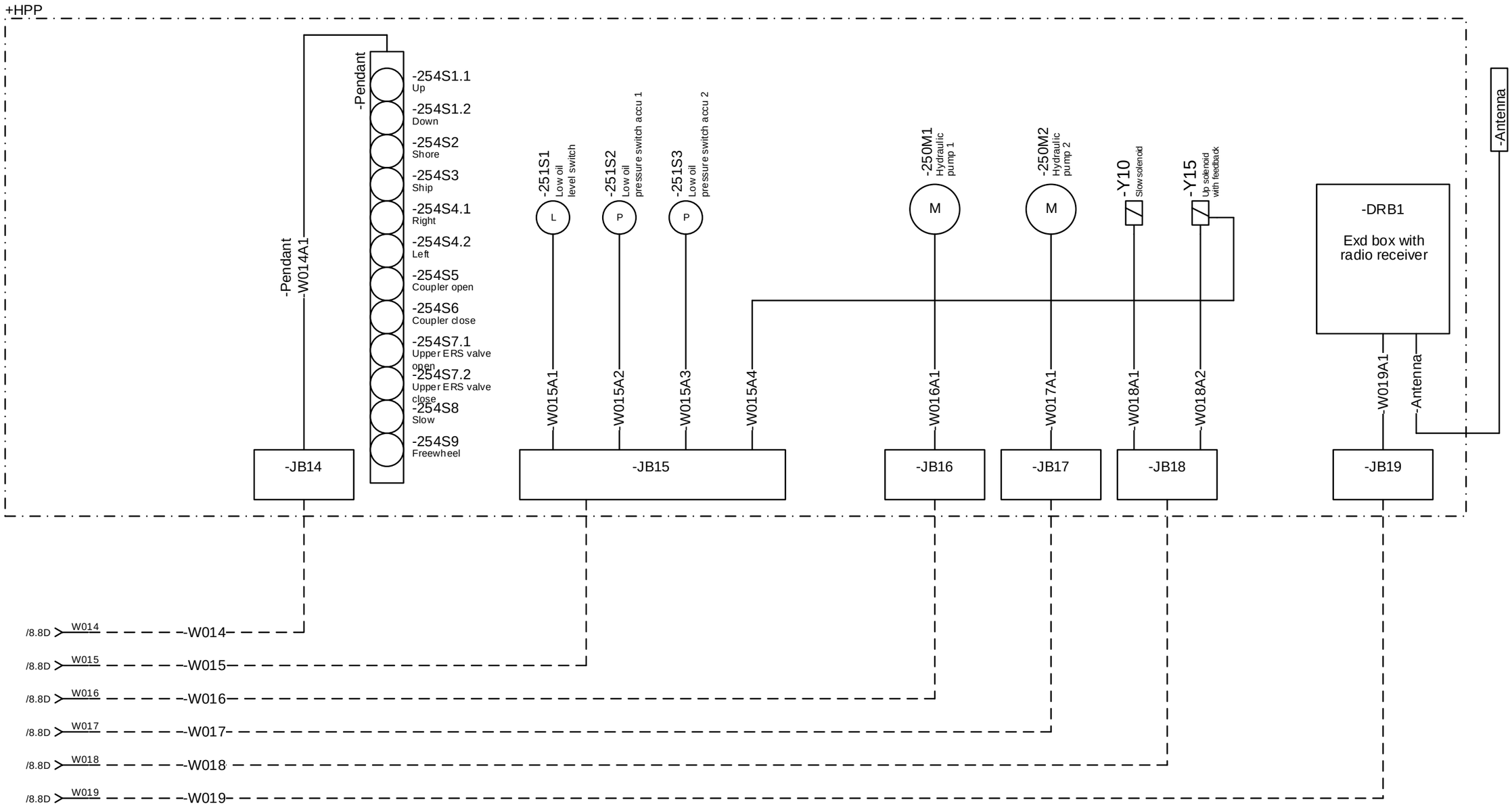

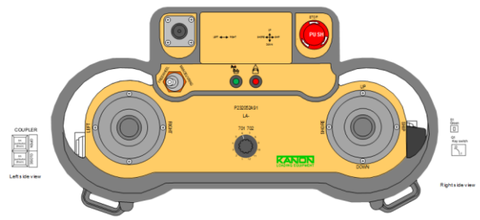

Radio controller
(For details see sheet 46)

Index	Revision	Date	name			
2	Final as built	19-3-2025	M.Besseling	Drawn:	31-10-2024	elshofjo
1	For approval	13-11-2024	besselingmi	Engineer:	19-9-2024	besselingmi
				Approved:		
				Changed:		

KANON LOADING EQUIPMENT B.V.

Ref: P242068, B242352 Quote:
Order: 2011280786 Item: 001000

KANON LOADING EQUIPMENT
www.kanon.nl

Electromach B.V.
Jan Tinbergenstraat 193
7559 SP Hengelo
The Netherlands

Overall view
Control system

Int. Revision : P242068A91
Drawing No.: +JETTY
2011280786-001000-24
Scale: 1 mm : 1 mm / A3
Refer to protection notice ISO 16016
Sheet: 9

P242068A10
+MLA-A

Loading arm LA1

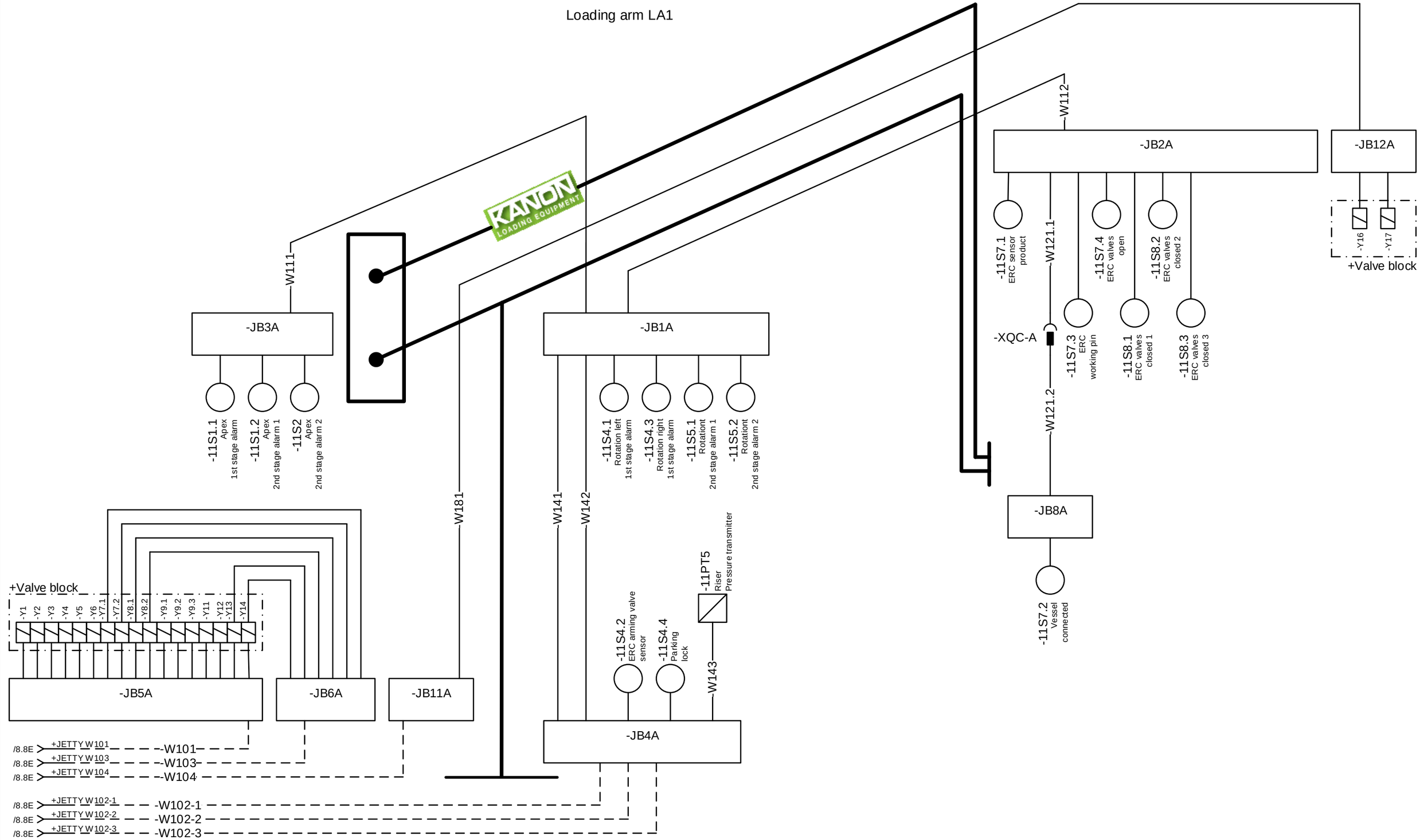

Index	Revision	Date	name	Drawn:	Engineer:	Approved:	Changed:
2	Final as built	19-3-2025	M.Besseling	31-10-2024	19-9-2024		elshofjo
1	For approval	13-11-2024	besselingmi				besselingmi

KANON LOADING EQUIPMENT B.V.

Ref: P242068, B242352 Quote:

Order: 2011280786 Item: 001000

KANON LOADING EQUIPMENT
www.kanon.nl

Electromach B.V.
Jan Tinbergenstraat 193
7559 SP Hengelo
The Netherlands

Overall view
Loading arm LA1

Int. Revision :	P242068A91
Drawing No.: 2011280786-001000-24	+MLA-A
Refer to protection notice ISO 16016	Scale: 1 mm : 1 mm / A3
	Sheet: 11

Notes:

Typical for sensors
NAMUR: BN+, BU-
Liquiphant: 1-, 2+

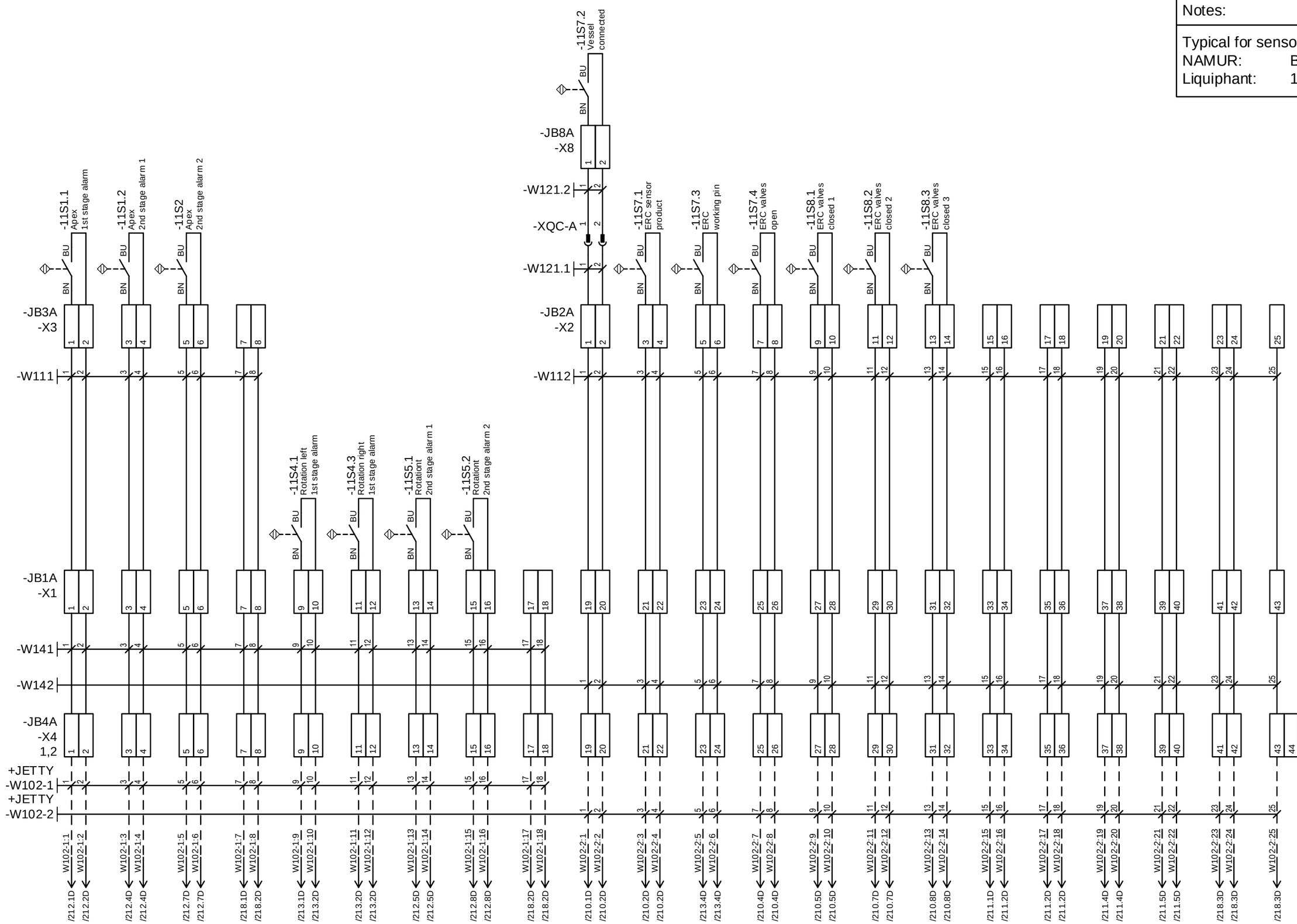

2	Final as built	19-3-2025	M.Besseling	Drawn:	31-10-2024	elshofjo	**KANON LOADING EQUIPMENT B.V.**		**Electromach B.V.** Jan Tinbergenstraat 193 7559 SP Hengelo The Netherlands	Cabling (IS signals) Loading arm LA1	Int. Revision : P242068A91
1	For approval	13-11-2024	besselingmi	Engineer:	19-9-2024	besselingmi					Drawing No.: 2011280786-001000-24
				Approved:			Ref: P242068, B242352	Quote:			Scale: 1 mm : 1 mm / A3
Index	Revision	Date	name	Changed:			Order: 2011280786	Item: 001000	www.kanon.nl		Refer to protection notice ISO 16016 — Sheet: 11.1

Notes:
Typical for sensors NAMUR: BN+, BU- Liquiphant: 1-, 2+

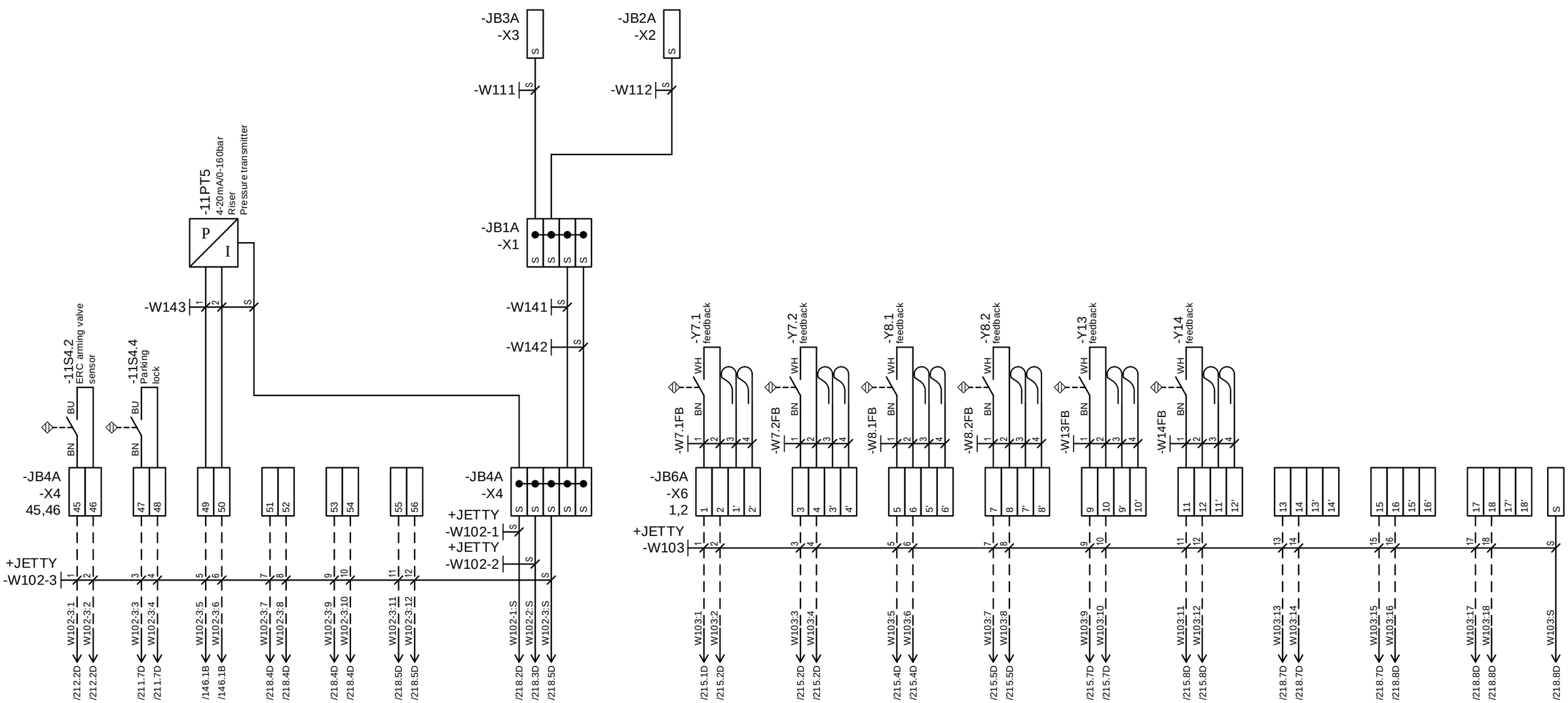

Index	Revision	Date	name				
				Drawn:	31-10-2024	elshofjo	
				Engineer:	19-9-2024	besselingmi	
				Approved:			
				Changed:			

KANON LOADING EQUIPMENT B.V.

Ref: P242068, B242352 Quote:

Order: 2011280786 Item: 001000

STAHL ELECTROMACH

Electromach BV
Jan Tinbergenstraat 193
7559 SP Hengelo
The Netherlands

Loading arm LA1

Main drawing set

Drawing No.: 2011280786-001000-24

Refer to protection notice ISO 16016

P242068A91

Sheet: 1.2 / 289 page: 1 / 1

Scale: 1 mm : 1 mm / A3

quantity: 1

+JETTY

-W101

W101:1 /112.1D
W101:2 /112.2D
W101:3 /112.3D
W101:4 /112.4D
W101:5 /112.5D
W101:6 /112.6D
W101:7 /112.7D
W101:8 /112.8D
W101:9 /190.1C
W101:10 /190.1C
W101:11 /190.3C
W101:12 /190.3C
W101:13 /190.4C
W101:14 /190.5C
W101:15 /190.6C
W101:16 /190.7C
W101:17 /190.8C

W101:18 /112.1D
W101:19 /112.2D
W101:20 /112.3D
W101:21 /112.4D
W101:22 /112.5D
W101:23 /190.3C
W101:24 /190.3C
W101:PE /190.8C
W101:S /190.9C

-JB5A
-X5

PE

+Valve block

-Y1 -Y2 -Y3 -Y4 -Y5 -Y6 -Y11 -Y12 -Y7.1 -Y7.2 -Y8.1 -Y8.2 -Y9.1 -Y9.2 -Y9.3 -Y13 -Y14

NOTE:
Each solenoid valve is connected to the earth bar in JB5

Index	Revision	Date	name				
2	Final as built	19-3-2025	M.Besseling	Drawn:	31-10-2024	elshofjo	
1	For approval	13-11-2024	besselingmi	Engineer:	19-9-2024	besselingmi	
				Approved:			
				Changed:			

KANON LOADING EQUIPMENT B.V.

Ref: P242068, B242352 Quote:
Order: 2011280786 Item: 001000

KANON LOADING EQUIPMENT
www.kanon.nl

Electromach B.V.
Jan Tinbergenstraat 193
7559 SP Hengelo
The Netherlands

Cabling (solenoids)
Loading arm LA1

Int. Revision :	P242068A91
Drawing No.:	+MLA-A
2011280786-001000-24	Scale: 1 mm : 1 mm / A3
Refer to protection notice ISO 16016	Sheet: 11.3

+JETTY

-W104 1 2 3 4 5 6 — /191.1C /191.2C /191.3C /191.4C /191.5C /191.6C

-W104 7 8 9 10 11 PE S — /191.1D /191.2D /191.3D /191.4D /191.5D /191.6C /191.7C

-JB11A -X11 1 2 3 4 5 6 — W104:1 W104:2 W104:3 W104:4 W104:5 W104:6

-JB11A -X11 7 8 9 10 11 PE — W104:7 W104:8 W104:9 W104:10 W104:11 W104:PE W104:S

-W181 1 2 3 4 5 6

-W181 7 8 9 10 11 PE S

-JB12A -X12 1 2 3 4 5 6

-JB12A -X12 7 8 9 10 11 PE

+Valve block

-Y16 1 3

-Y17 1 3

NOTE:
Each solenoid valve is connected to the earth bar in JB12

2	Final as built	19-3-2025	M.Besseling	Drawn:	31-10-2024	elshofjo	**KANON LOADING EQUIPMENT B.V.**		**Electromach B.V.** Jan Tinbergenstraat 193 7559 SP Hengelo The Netherlands	Cabling (solenoids) Loading arm LA1	Int. Revision : P242068A91
1	For approval	13-11-2024	besselingmi	Engineer:	19-9-2024	besselingmi					Drawing No.: 2011280786-001000-24
				Approved:			Ref: P242068, B242352	Quote:			Scale: 1 mm : 1 mm / A3
Index	Revision	Date	name	Changed:			Order: 2011280786	Item: 001000	www.kanon.nl		Refer to protection notice ISO 16016 — Sheet: 11.4

P242068B10
+MLA-B

Loading arm LA2

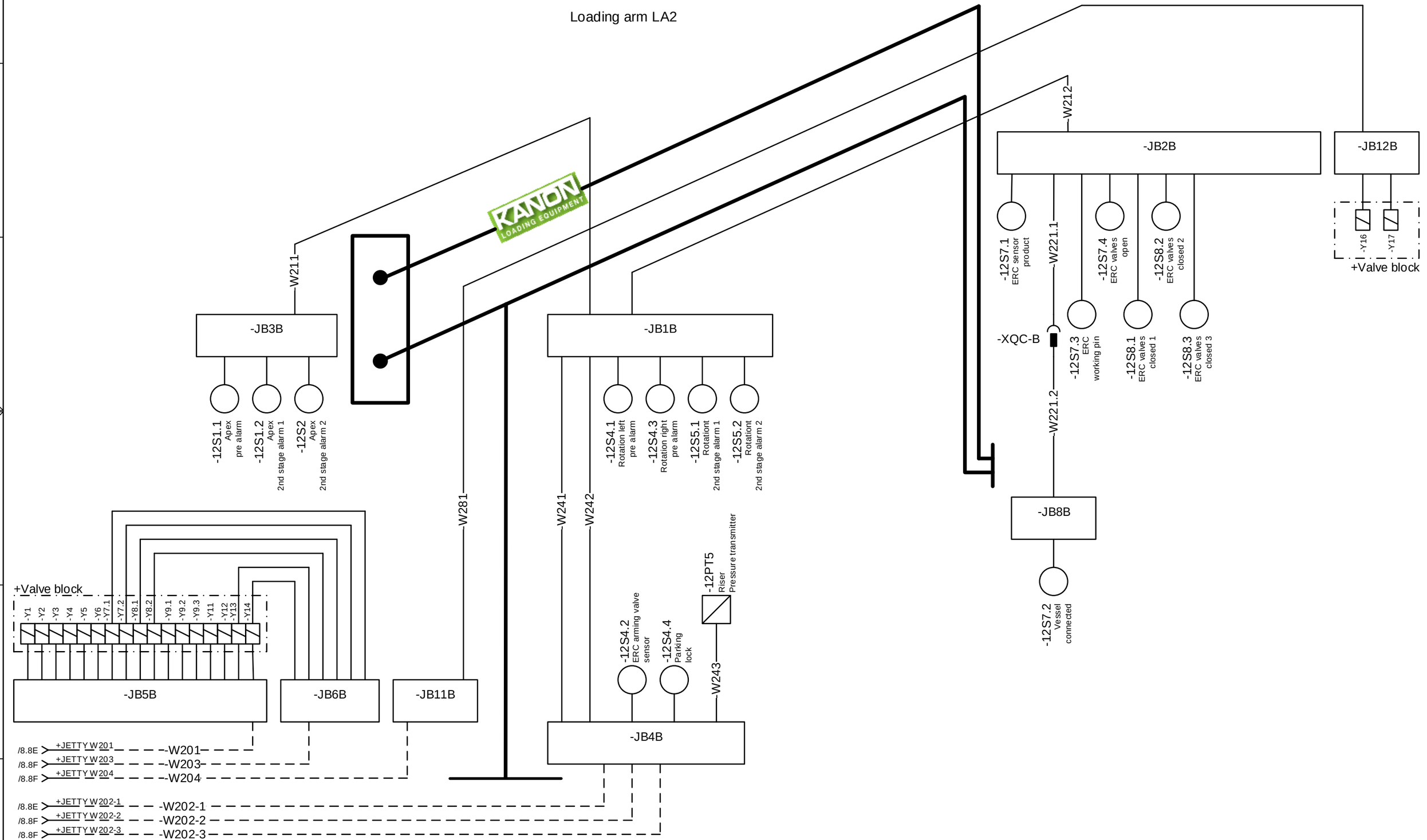

Index	Revision	Date	name
2	Final as built	19-3-2025	M.Besseling
1	For approval	13-11-2024	besselingmi

Drawn:	31-10-2024	elshofjo	**KANON LOADING EQUIPMENT B.V.**		
Engineer:	19-9-2024	besselingmi			
Approved:			Ref: P242068, B242352	Quote:	
Changed:			Order: 2011280786	Item: 001000	

KANON LOADING EQUIPMENT
www.kanon.nl

Electromach B.V.
Jan Tinbergenstraat 193
7559 SP Hengelo
The Netherlands
US

Overall view
Loading arm LA2

Int. Revision :	P242068A91
Drawing No.:	+MLA-B
2011280786-001000-24	Scale: 1 mm : 1 mm / A3
Refer to protection notice ISO 16016	Sheet: 12

Notes:

Typical for sensors
NAMUR: BN+, BU-
Liquiphant: 1-, 2+

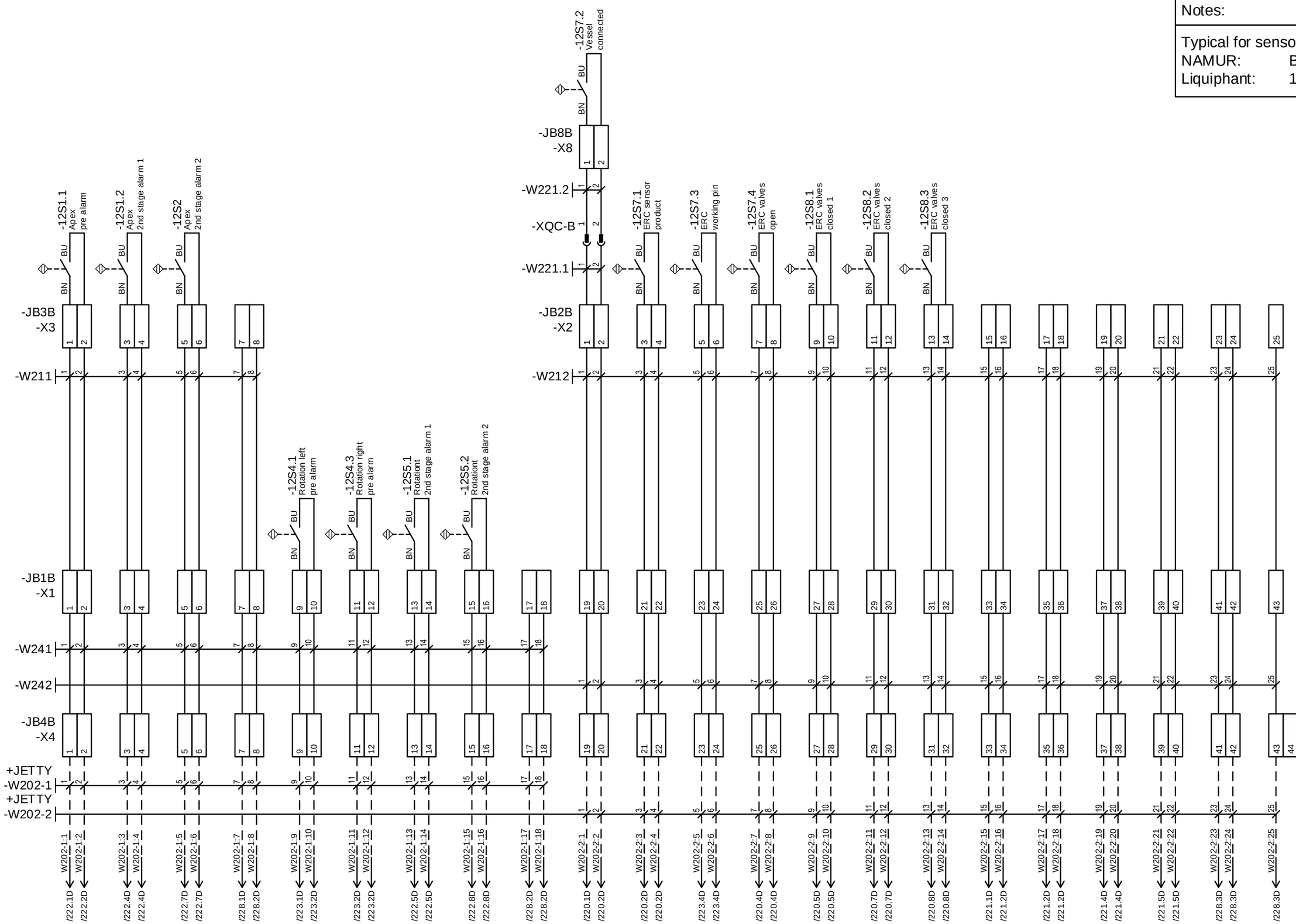

Index	Revision	Date	name
2	Final as built	19-3-2025	M.Besseling
1	For approval	13-11-2024	besselingmi

Drawn:	31-10-2024	elshofjo	
Engineer:	19-9-2024	besselingmi	
Approved:			
Changed:			

KANON LOADING EQUIPMENT B.V.

Ref: P242068, B242352 Quote:
Order: 2011280786 Item: 001000

KANON LOADING EQUIPMENT
www.kanon.nl

Electromach B.V.
Jan Tinbergenstraat 193
7559 SP Hengelo
The Netherlands

Cabling (IS signals)
Loading arm LA2

Int. Revision :	P242068A91
Drawing No.:	+MLA-B
2011280786-001000-24	Scale: 1 mm : 1 mm / A3
Refer to protection notice ISO 16016	Sheet: 12.1

Notes:
Typical for sensors NAMUR: BN+, BU- Liquiphant: 1-, 2+

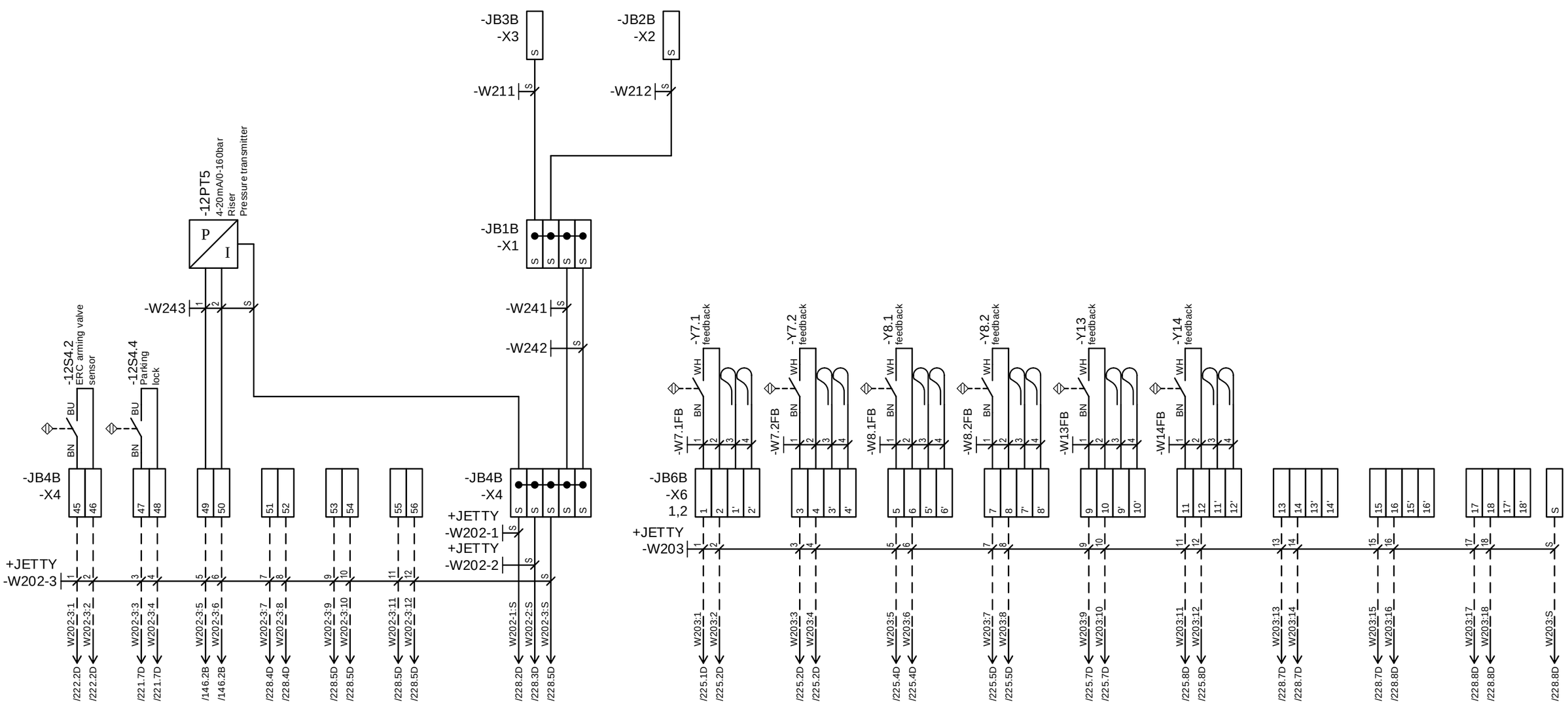

Index	Revision	Date	name				
				Drawn:	31-10-2024	elshofjo	
				Engineer:	19-9-2024	besselingmi	
				Approved:			
				Changed:			

KANON LOADING EQUIPMENT B.V.

Ref: P242068, B242352 Quote:

Order: 2011280786 Item: 001000

STAHL ELECTROMACH

Electromach BV
Jan Tinbergenstraat 193
7559 SP Hengelo
The Netherlands

Loading arm LA2

Main drawing set

Drawing No.: 2011280786-001000-24

Refer to protection notice ISO 16016

P242068A91

Sheet: 2.2 / 289 page: 1 / 1

Scale: 1 mm : 1 mm / A3

quantity: 1

+JETTY

-W201

/114.1D W201:1 1
/114.2D W201:2 2
/114.3D W201:3 3
/114.4D W201:4 4
/114.5D W201:5 5
/114.6D W201:6 6
/114.7D W201:7 7
/114.8D W201:8 8
/195.1C W201:9 9
/195.1C W201:10 10
/195.3C W201:11 11
/195.3C W201:12 12
/195.4C W201:13 13
/195.5C W201:14 14
/195.6C W201:15 15
/195.7C W201:16 16
/195.8C W201:17 17

-W201

/114.1D W201:18 18
/114.2D W201:19 19
/114.3D W201:20 20
/114.4D W201:21 21
/114.5D W201:22 22
/195.3C W201:23 23
/195.3C W201:24 24
/195.8C W201:PE PE
/195.9C W201:S S

-JB5B
-X5

1 2 3 4 5 6 7 8 9 10 11 12 13 14 15 16 17

-JB5B
-X5

18 19 20 21 22 23 24 25 26 27 28 29 30 31 32 33 34 PE

+Valve block

-Y1 -Y2 -Y3 -Y4 -Y5 -Y6 -Y11 -Y12 -Y7.1 -Y7.2 -Y8.1 -Y8.2 -Y9.1 -Y9.2 -Y9.3 -Y13 -Y14

1 3

NOTE:
Each solenoid valve is connected to the earth bar in JB5

Index	Revision	Date	name			
2	Final as built	19-3-2025	M.Besseling	Drawn:	31-10-2024	elshofjo
1	For approval	13-11-2024	besselingmi	Engineer:	19-9-2024	besselingmi
				Approved:		
				Changed:		

KANON LOADING EQUIPMENT B.V.

Ref: P242068, B242352 Quote:
Order: 2011280786 Item: 001000

KANON LOADING EQUIPMENT
www.kanon.nl

Electromach B.V.
Jan Tinbergenstraat 193
7559 SP Hengelo
The Netherlands

Cabling (solenoids)
Loading arm LA2

Int. Revision :	P242068A91
Drawing No.:	+MLA-B
2011280786-001000-24	Scale: 1 mm : 1 mm / A3
Refer to protection notice ISO 16016	Sheet: 12.3

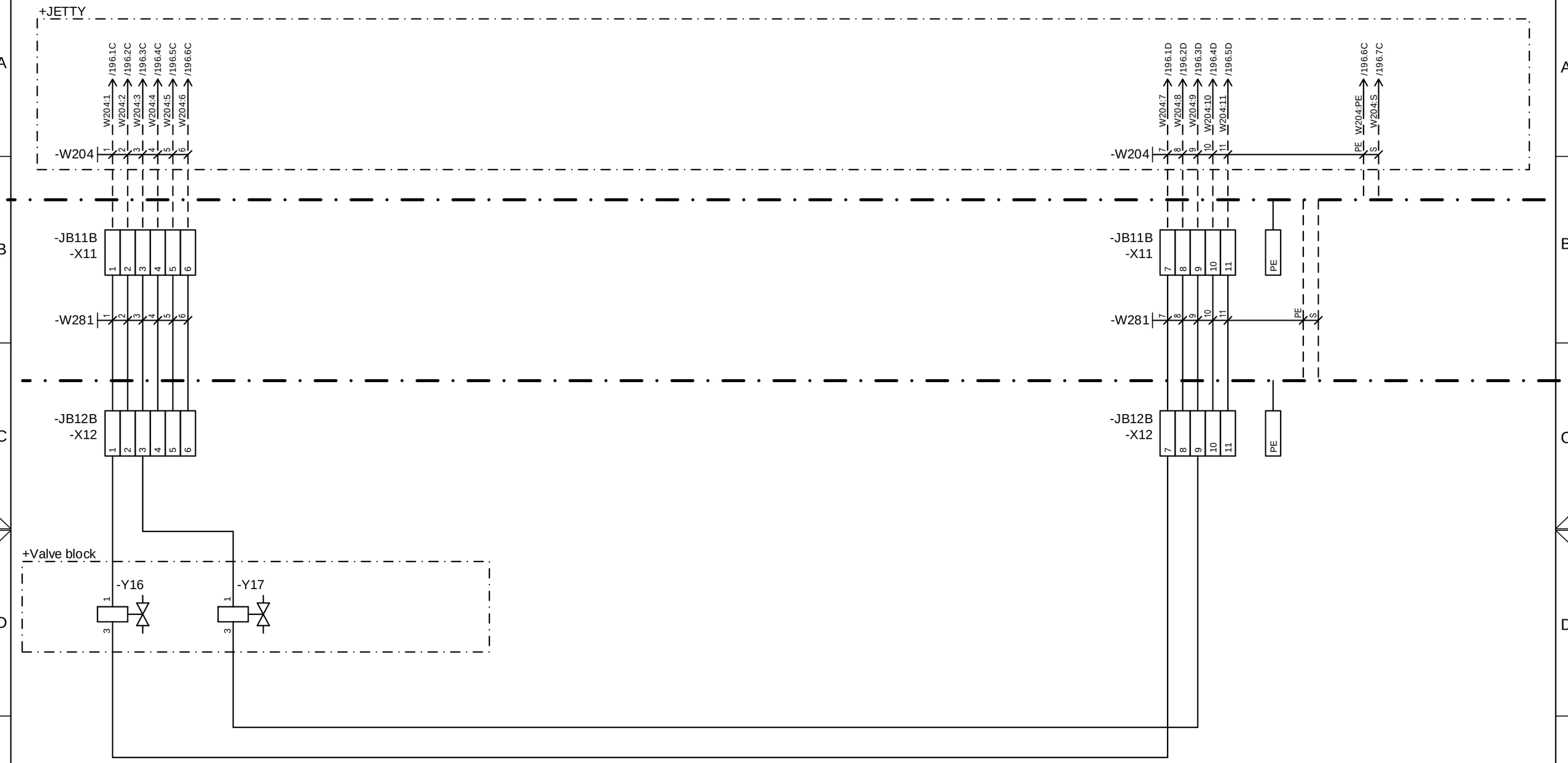

NOTE:
Each solenoid valve is connected to the earth bar in JB12

Index	Revision	Date	name				
2	Final as built	19-3-2025	M.Besseling	Drawn:	31-10-2024	elshofjo	KANON LOADING EQUIPMENT B.V.
1	For approval	13-11-2024	besselingmi	Engineer:	19-9-2024	besselingmi	
				Approved:			Ref: P242068, B242352 Quote:
				Changed:			Order: 2011280786 Item: 001000

KANON LOADING EQUIPMENT
www.kanon.nl

Electromach B.V.
Jan Tinbergenstraat 193
7559 SP Hengelo
The Netherlands

Cabling (solenoids)
Loading arm LA2

Int. Revision :	P242068A91
Drawing No.:	+MLA-B
2011280786-001000-24	Scale: 1 mm : 1 mm / A3
Refer to protection notice ISO 16016	Sheet: 12.4

List of cables

Row	▲ Designation	Short Description	Scope	Destination 1	Destination 2	Length	Outside Diameter	Color
1	-Antenna	RG58-MUD	KLE/EM	+HPP -DRB1	+HPP -Antenna	5,00 m	7,70 mm	Black
2	-W000	VG-YMvKas mb 3 x 16 mm²	Client	+EXT -PS000	+JOCC -ETB1 -X000	0,00 m	26,50 mm	Grey
3	-W001	VG-YMvKas Dca-s2 3 x 6 mm²	Client	+EXT -PS001	+JOCC -ETB1 -X001	0,00 m	15,60 mm	Grey
4	-W006	PFC Cable	Client	+EXT -CLIENT	+JOCC -ETB1 -X6	0,00 m		
5	-W011	KVCY Dca 3 x 0,75 mm²	KLE/EM	+JOCC -ECB2 -X4		2,00 m	9,00 mm	Grey
6	-W012	KVCY Dca 3 x 0,75 mm²	KLE/EM	+JOCC -ECB2 -X4		2,00 m	9,00 mm	Grey
7	-W014	OZ-BL-CY 18 x 0,75 mm²	Client	+JOCC -ETB2 -Xi14	+HPP -JB14	50,00 m	12,70 mm	Blue
8	-W014A1	OZ-BL-CY 18 x 0,75 mm²	KLE	+HPP -JB14	+HPP -Pendant	3,00 m	12,70 mm	Blue
9	-W015	OZ-BL-CY 8 x 0,75 mm²		+JOCC -ETB2 -Xi15	+HPP -JB15		9,50 mm	Blue
10	-W015A1	OZ-BL-CY 2 x 0,75 mm²	KLE/EM	+HPP -JB15	+HPP -251S1	3,00 m	6,10 mm	Blue
11	-W015A2	OZ-BL-CY 2 x 0,75 mm²	KLE/EM	+HPP -JB15	+HPP -251S2	3,00 m	6,10 mm	Blue
12	-W015A3	OZ-BL-CY 2 x 0,75 mm²	KLE/EM	+HPP -JB15	+HPP -251S3	3,00 m	6,10 mm	Blue
13	-W015A4	OZ-BL-CY 2 x 0,75 mm²	KLE/EM	+HPP -JB15	+HPP -Y15	3,00 m	6,10 mm	Blue
14	-W016	VG-YMvKas Dca-s2 3 x 6 mm²	Client	+JOCC -ETB1 -X016	+HPP -JB16	20,00 m	16,20 mm	Grey
15	-W016A1	H07RN-F4G6 4 x 6 mm²	KLE/EM	+HPP -JB16	+HPP -250M1	3,00 m	16,70 mm	Black
16	-W017	VG-YMvKas Dca-s2 3 x 6 mm²	Client	+JOCC -ETB1 -X017	+HPP -JB17	20,00 m	16,20 mm	Grey
17	-W017A1	H07RN-F4G6 4 x 6 mm²	KLE/EM	+HPP -JB17	+HPP -250M2	3,00 m	16,70 mm	Black
18	-W018	KVCY Dca 5 x 0,75 mm²	Client	+JOCC -ETB1 -X018	+HPP -JB18	20,00 m	10,50 mm	Grey
19	-W018A1	KVCY Dca 3 x 0,75 mm²	KLE/EM	+HPP -JB18	+HPP -Y10	3,00 m	9,00 mm	Grey
20	-W018A2	KVCY Dca 3 x 0,75 mm²	KLE/EM	+HPP -JB18	+HPP -Y15	4,00 m	9,00 mm	Grey
21	-W019	KVCY Dca 25 x 0,75 mm²	Client	+JOCC -ETB1 -X019	+HPP -JB19	20,00 m	20,80 mm	Grey
22	-W019A1	KVCY Dca 25 x 1,5 mm²	KLE/EM	+HPP -JB19	+HPP -DRB1	3,00 m	25,10 mm	Grey
23	-W101	KVCY Dca 25 x 1,5 mm²	Client	+MLA-A -JB5A	+JOCC -ETB1 -XLA1	50,00 m	25,10 mm	Grey
24	-W102-1	OZ-BL-CY 18 x 0,75 mm²	Client	+JOCC -ETB2 -XiLA1	+JOCC -ETB2 -XiLA1,+MLA-A -JB4A	50,00 m	12,90 mm	Blue
25	-W102-2	OZ-BL-CY 25 x 0,75 mm²	Client	+JOCC -ETB2 -XiLA1	+MLA-A -JB4A	50,00 m	15,00 mm	Blue
26	-W102-3	OZ-BL-CY 12 x 0,75 mm²	Client	+MLA-A -JB4A	+JOCC -ETB2 -XiLA1	50,00 m	11,10 mm	Blue
27	-W103	OZ-BL-CY 18 x 0,75 mm²	Client	+JOCC -ETB2 -XiYLA1	+MLA-A -JB6A	50,00 m	12,70 mm	Blue
28	-W104	KVCY Dca 12 x 1,5 mm²		+MLA-A -JB11A	+JOCC -ETB1 -XYLA1		17,90 mm	Grey
29	-W111	OZ-BL-CY 8 x 0,75 mm²	KLE	+MLA-A -JB1A	+MLA-A -JB3A	10,00 m	9,00 mm	Blue
30	-W112	OZ-BL-CY 25 x 0,75 mm²	KLE	+MLA-A -JB1A	+MLA-A -JB2A	20,00 m	15,40 mm	Blue
31	-W121.1	ERC QCDC cable	KLE	+MLA-A -JB2A	+MLA-A -XQC-A	2,00 m	8,20 mm	Blue
32	-W121.2	ERC QCDC cable	KLE	+MLA-A -XQC-A	+MLA-A -JB8A	2,00 m	8,20 mm	Blue
33	-W141	OZ-BL-CY 18 x 0,75 mm²	KLE	+MLA-A -JB4A	+MLA-A -JB1A	15,00 m	12,70 mm	Blue
34	-W142	OZ-BL-CY 25 x 0,75 mm²	KLE	+MLA-A -JB1A	+MLA-A -JB4A	15,00 m	15,40 mm	Blue
35	-W143	OZ-BL-CY 2 x 0,75 mm²	KLE/EM	+MLA-A -JB4A	+MLA-A -11PT5	3,00 m	6,10 mm	Blue
36	-W181	KVCY Dca 12 x 1,5 mm²		+MLA-A -JB11A			17,90 mm	Grey
37	-W201	KVCY Dca 25 x 1,5 mm²	Client		+JOCC -ETB1 -XLA2	50,00 m	25,10 mm	Grey
38	-W202-1	OZ-BL-CY 18 x 0,75 mm²	Client		+JOCC -ETB2 -XiLA2	50,00 m	12,90 mm	Blue
39	-W202-2	OZ-BL-CY 25 x 0,75 mm²	Client	+JOCC -ETB2 -XiLA2		50,00 m	15,00 mm	Blue
40	-W202-3	OZ-BL-CY 12 x 0,75 mm²	Client	+JOCC -ETB2 -XiLA2		50,00 m	11,10 mm	Blue

Index	Revision	Date	name			
2	Final as built	19-3-2025	M.Besseling	Drawn:	31-10-2024	elshofjo
2	For approval	13-11-2024	besselingmi	Engineer:	19-9-2024	besselingmi
2				Approved:		
				Changed:		

KANON LOADING EQUIPMENT B.V.

Ref: P242068, B242352 Quote:
Order: 2011280786 Item: 001000

KANON LOADING EQUIPMENT
www.kanon.nl

Electromach BV
Jan Tinbergenstraat 193
7559 SP Hengelo
The Netherlands

List of cables

Int. Revision : P242068A91
Drawing No.: 2011280786-001000-24
Refer to protection notice ISO 16016
Scale: 1 mm : 1 mm / A3
Sheet: 20 page 1 / 2

List of cables

Row	▲ Designation	Short Description	Scope	Destination 1	Destination 2	Length	Outside Diameter	Color
41	-W203	OZ-BL-CY 18 x 0,75 mm²	Client	+JOCC -ETB2 -XiYLA2		50,00 m	12,70 mm	Blue
42	-W204	KVCY Dca 12 x 1,5 mm²		+MLA-B -JB11B	+JOCC -ETB1 -XYLA2		17,90 mm	Grey
43	-W211	OZ-BL-CY 8 x 0,75 mm²	KLE	+MLA-B -JB3B	+MLA-B -JB1B	10,00 m	9,00 mm	Blue
44	-W212	OZ-BL-CY 25 x 0,75 mm²	KLE	+MLA-B -JB2B	+MLA-B -JB1B	20,00 m	15,40 mm	Blue
45	-W221.1	ERC QCDC cable	KLE	+MLA-B -XQC-B	+MLA-B -JB2B	2,00 m	8,20 mm	Blue
46	-W221.2	ERC QCDC cable	KLE	+MLA-B -JB8B	+MLA-B -XQC-B	2,00 m	8,20 mm	Blue
47	-W241	OZ-BL-CY 18 x 0,75 mm²	KLE	+MLA-B -JB4B	+MLA-B -JB1B	15,00 m	12,70 mm	Blue
48	-W242	OZ-BL-CY 25 x 0,75 mm²	KLE	+MLA-B -JB1B	+MLA-B -JB4B	15,00 m	15,40 mm	Blue
49	-W243	OZ-BL-CY 2 x 0,75 mm²	KLE/EM	+MLA-B -12PT5		3,00 m	6,10 mm	Blue
50	-W281	KVCY Dca 12 x 1,5 mm²		+MLA-B -JB11B			17,90 mm	Grey
51	-WCOM	Modbus cable	Client	+JOCC -ETB1 -Xcom	+EXT -CLIENT	0,00 m		

Index	Revision	Date	name
2	Final as built	19-3-2025	M.Besseling
2	For approval	13-11-2024	besselingmi
2			

Drawn:	31-10-2024	elshofjo
Engineer:	19-9-2024	besselingmi
Approved:		
Changed:		

KANON LOADING EQUIPMENT B.V.

Ref: P242068, B242352 Quote:

Order: 2011280786 Item: 001000

KANON LOADING EQUIPMENT

www.kanon.nl

Electromach BV
Jan Tinbergenstraat 193
7559 SP Hengelo
The Netherlands

List of cables

Int. Revision : P242068A91

Drawing No.: 2011280786-001000-24

Scale: 1 mm : 1 mm / A3

Refer to protection notice ISO 16016

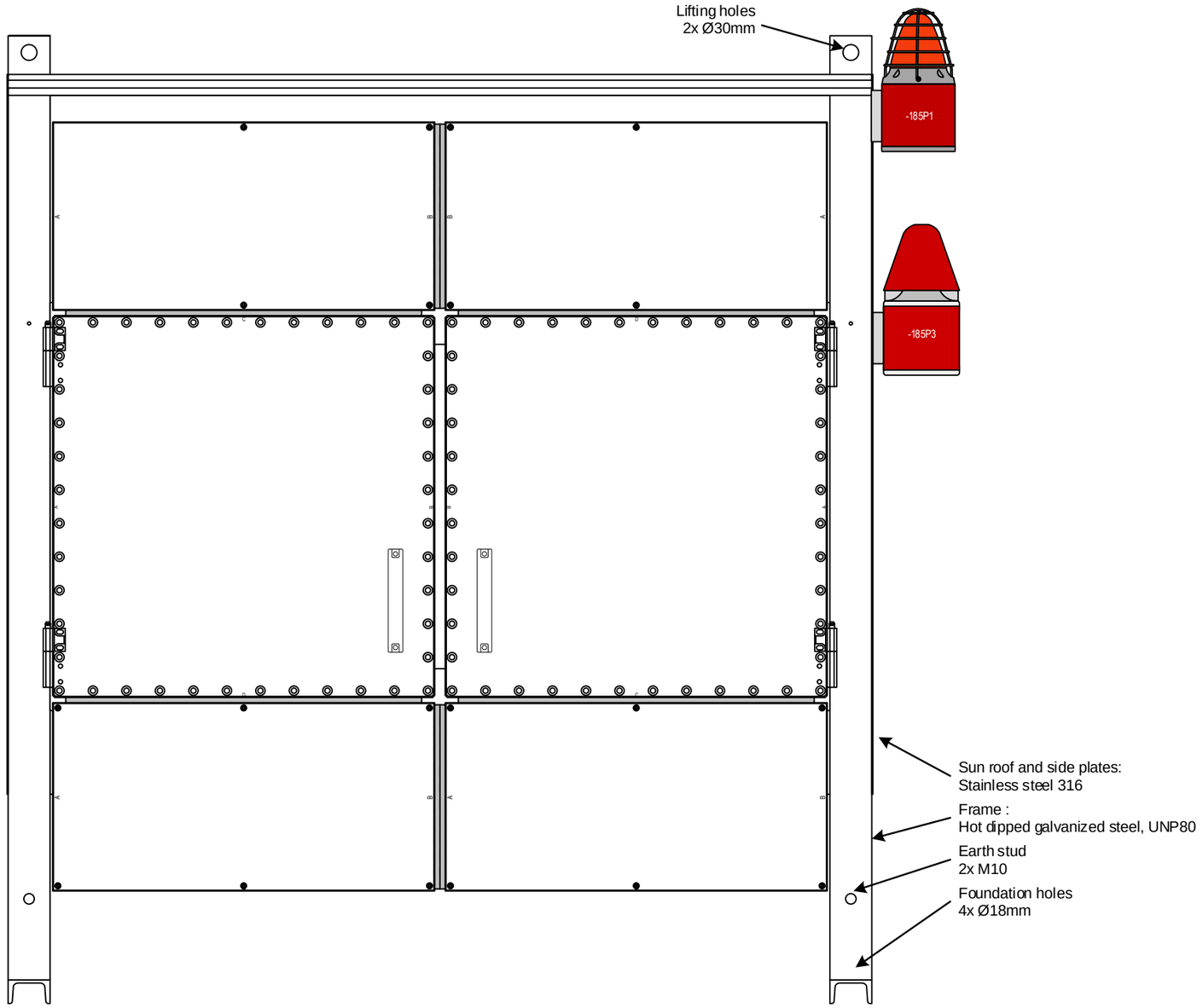

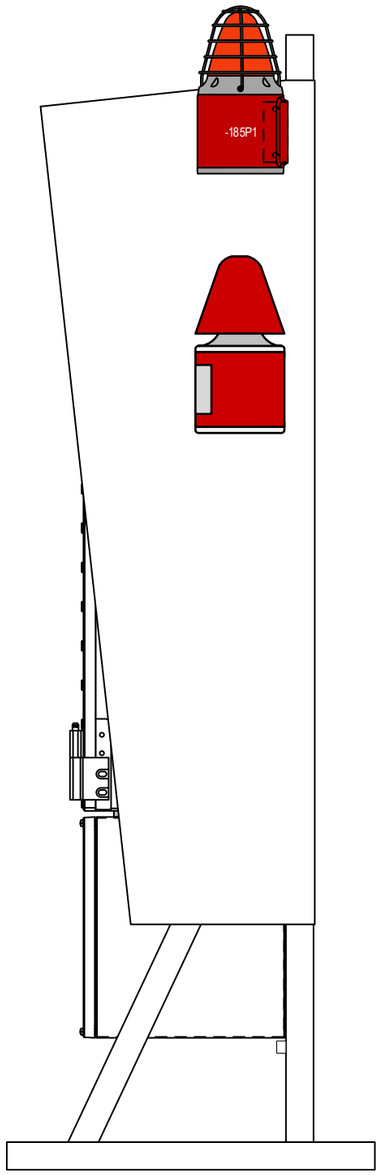

For arrangement see individual layout sheets

Index	Revision	Date	name			
2	Final as built	19-3-2025	M.Besseling	Drawn:	31-10-2024	elshofjo
1	For approval	13-11-2024	besselingmi	Engineer:	19-9-2024	besselingmi
				Approved:		
				Changed:		

KANON LOADING EQUIPMENT B.V.

Ref: P242068, B242352 | Quote:
Order: 2011280786 | Item: 001000

KANON LOADING EQUIPMENT
www.kanon.nl

Electromach B.V.
Jan Tinbergenstraat 193
7559 SP Hengelo
The Netherlands

Layout
+JOCC

Int. Revision :	P242068A91
Drawing No.	+JOCC
2011280786-001000-24	Scale: 1 mm : 10 mm / A3
Refer to protection notice ISO 16016	Sheet: 21

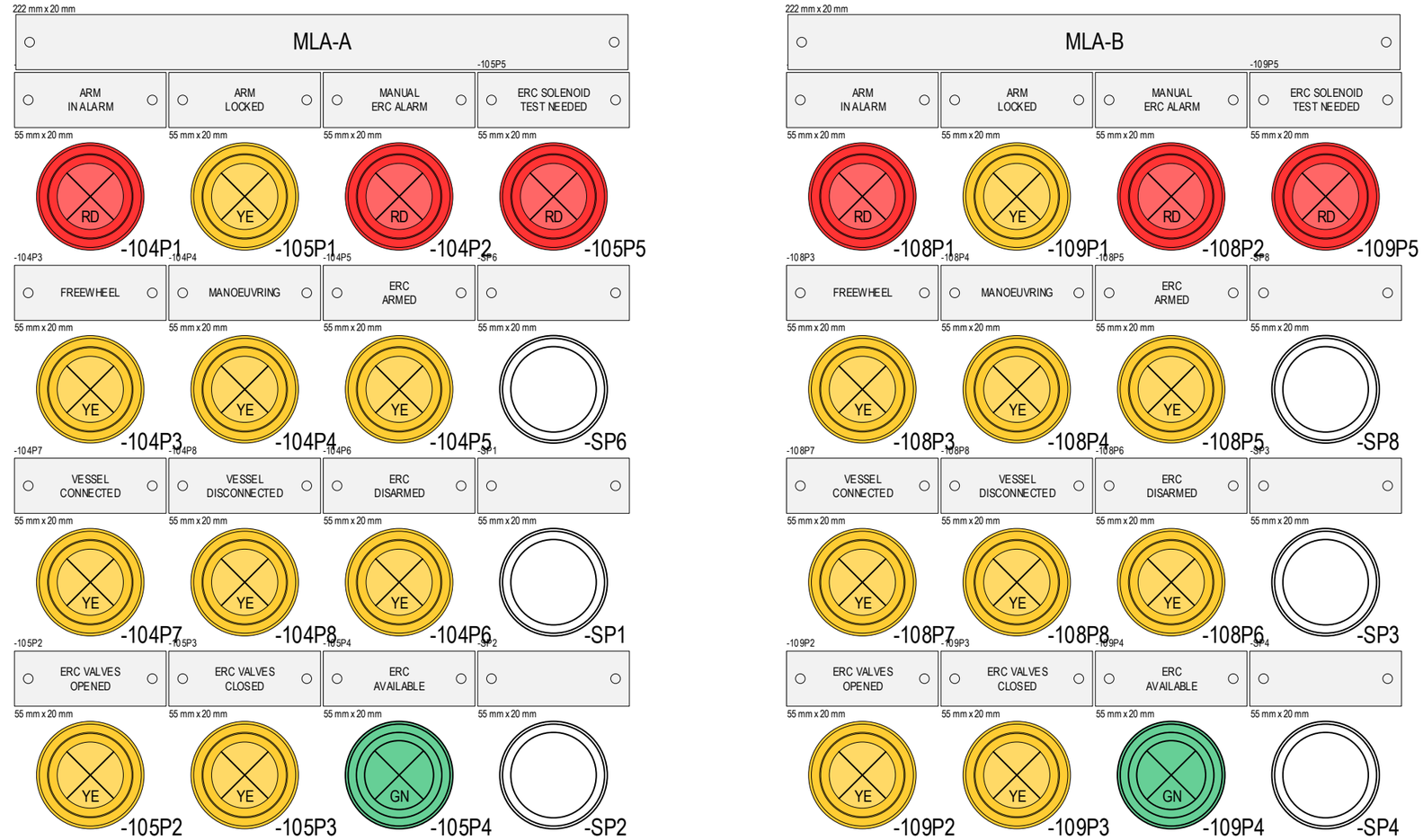

Index	Revision	Date	name			
3	Final as built	19-3-2025	M.Besseling	Drawn:	31-10-2024	elshofjo
2	Final for production	22-11-2024	besselingmi	Engineer:	19-9-2024	besselingmi
1	For approval	13-11-2024	besselingmi	Approved:		
				Changed:		

KANON LOADING EQUIPMENT B.V.

Ref: P242068, B242352 | Quote:

Order: 2011280786 | Item: 001000

KANON LOADING EQUIPMENT
www.kanon.nl

Electromach B.V.
Jan Tinbergenstraat 193
7559 SP Hengelo
The Netherlands
US

Layout
-ECB1 front

Int. Revision :	P242068A91
Drawing No. 2011280786-001000-24	+JOCC-ECB1
Scale:	1 mm : 2 mm / A3
Refer to protection notice ISO 16016	Sheet: 22.1

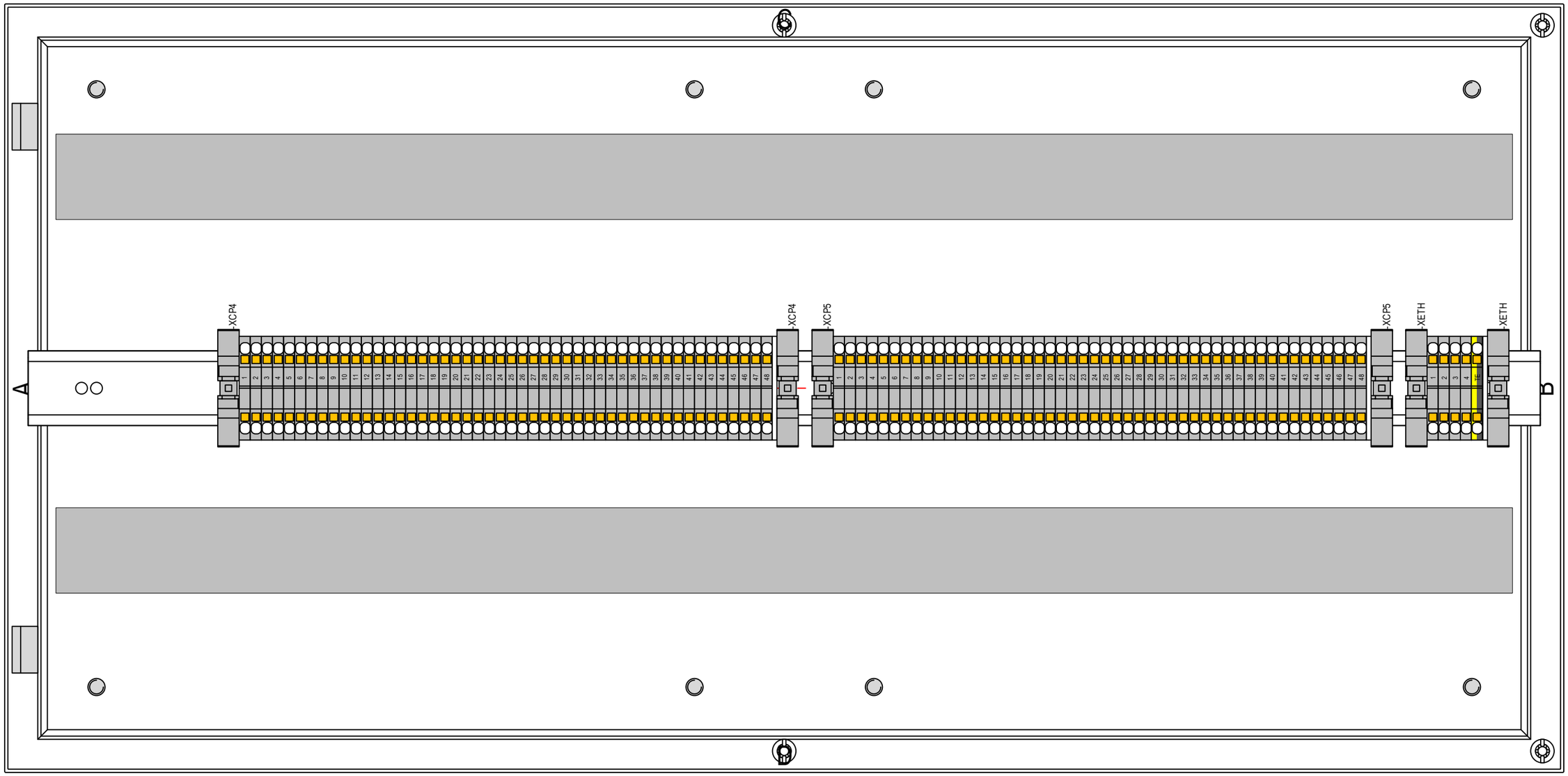

3	*Final as built*	*19-3-2025*	*M.Besseling*	Drawn:	*31-10-2024*	*elshofjo*	***KANON LOADING EQUIPMENT B.V.***		***Electromach B.V.***	Layout	Int. Revision :	*P242068A91*
2	*Final for production*	*22-11-2024*	*besselingmi*	Engineer:	*19-9-2024*	*besselingmi*			*Jan Tinbergenstraat 193*	-ECB1 internal	Drawing No.	*+JOCC-ECB1*
1	*For approval*	*13-11-2024*	*besselingmi*	Approved:			Ref: *P242068, B242352*	Quote:	*7559 SP Hengelo*		*2011280786-001000-24*	Scale: *1 mm : 2 mm / A3*
Index	Revision	Date	name	Changed:			Order: *2011280786*	Item: *001000*	*The Netherlands*		Refer to protection notice ISO 16016	Sheet: *22.2*

KANON LOADING EQUIPMENT
www.kanon.nl

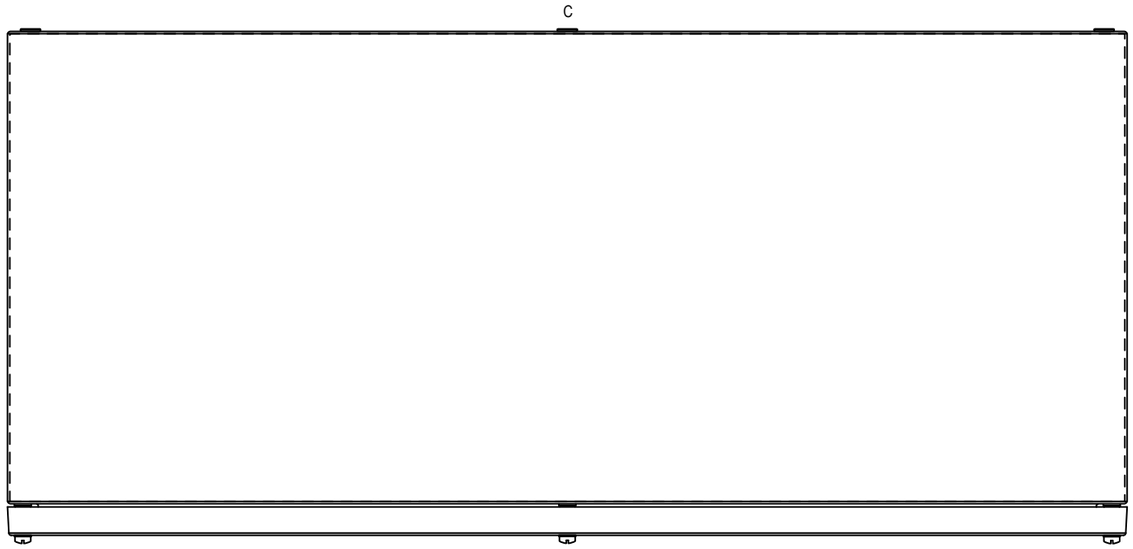

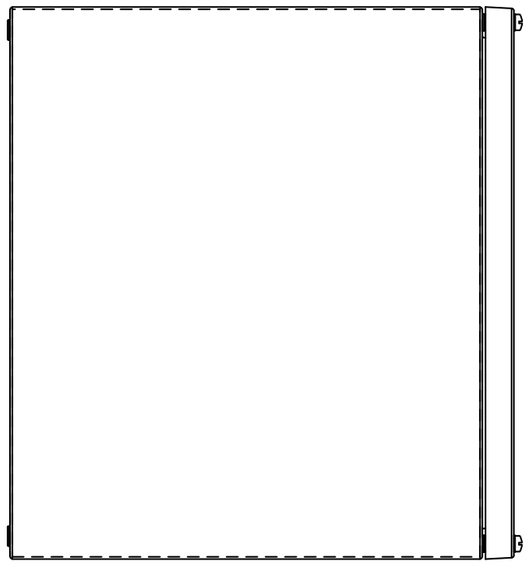

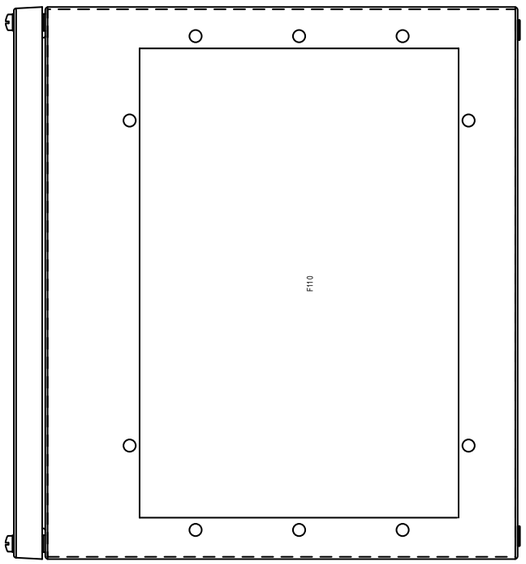

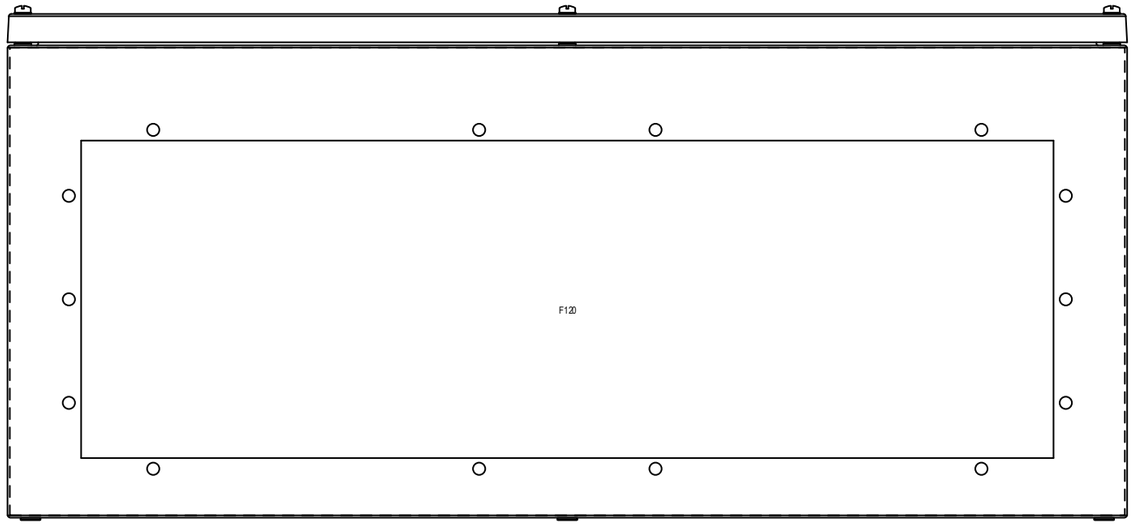

Index	Revision	Date	name			
2	Final as built	19-3-2025	M.Besseling	Drawn:	31-10-2024	elshofjo
1	For approval	13-11-2024	besselingmi	Engineer:	19-9-2024	besselingmi
				Approved:		
				Changed:		

KANON LOADING EQUIPMENT B.V.

Ref: P242068, B242352 Quote:

Order: 2011280786 Item: 001000

KANON LOADING EQUIPMENT

www.kanon.nl

Electromach B.V.
Jan Tinbergenstraat 193
7559 SP Hengelo
The Netherlands
US

Layout
-ECB1 top/bottom/sides

Int. Revision :	P242068A91
Drawing No. 2011280786-001000-24	+JOCC-ECB1
Scale:	1 mm : 4 mm / A3
Refer to protection notice ISO 16016	Sheet: 22.3

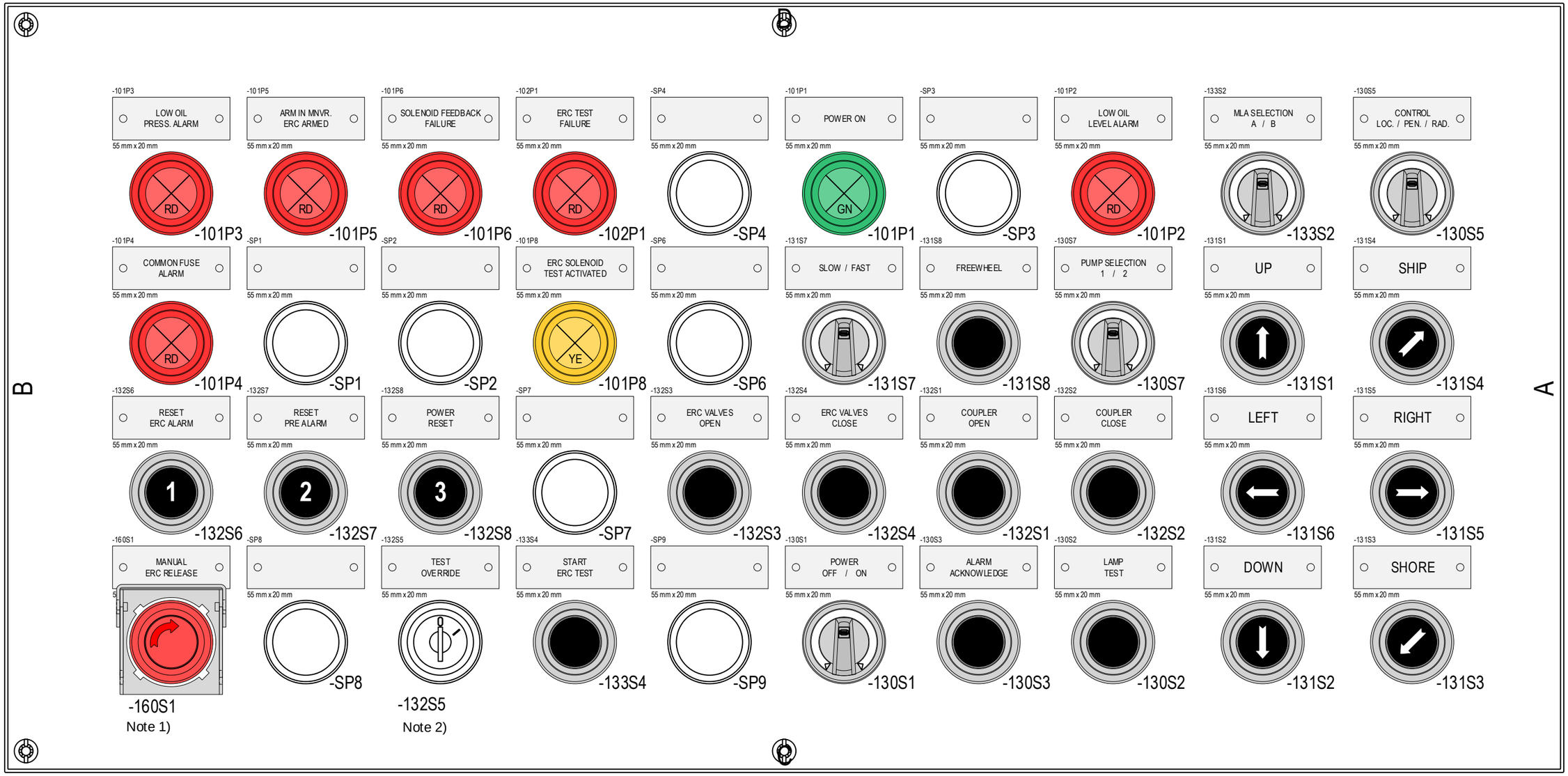

Note 1)
Stainless steel protective cover with red plate

Note 2)
Key only removable in “0” position

Index	Revision	Date	name

Drawn:	31-10-2024	elshofjo
Engineer:	19-9-2024	besselingmi
Approved:		
Changed:		

KANON LOADING EQUIPMENT B.V.

Ref: P242068, B242352 Quote:
Order: 2011280786 Item: 001000

KANON LOADING EQUIPMENT
www.kanon.nl

Electromach B.V.
Jan Tinbergenstraat 193
7559 SP Hengelo
The Netherlands
US

Layout
-ECB2 front

Int. Revision :	P242068A91
Drawing No. 2011280786-001000-24	+JOCC-ECB2
Scale:	1 mm : 2 mm / A3
Refer to protection notice ISO 16016	Sheet: 23.1

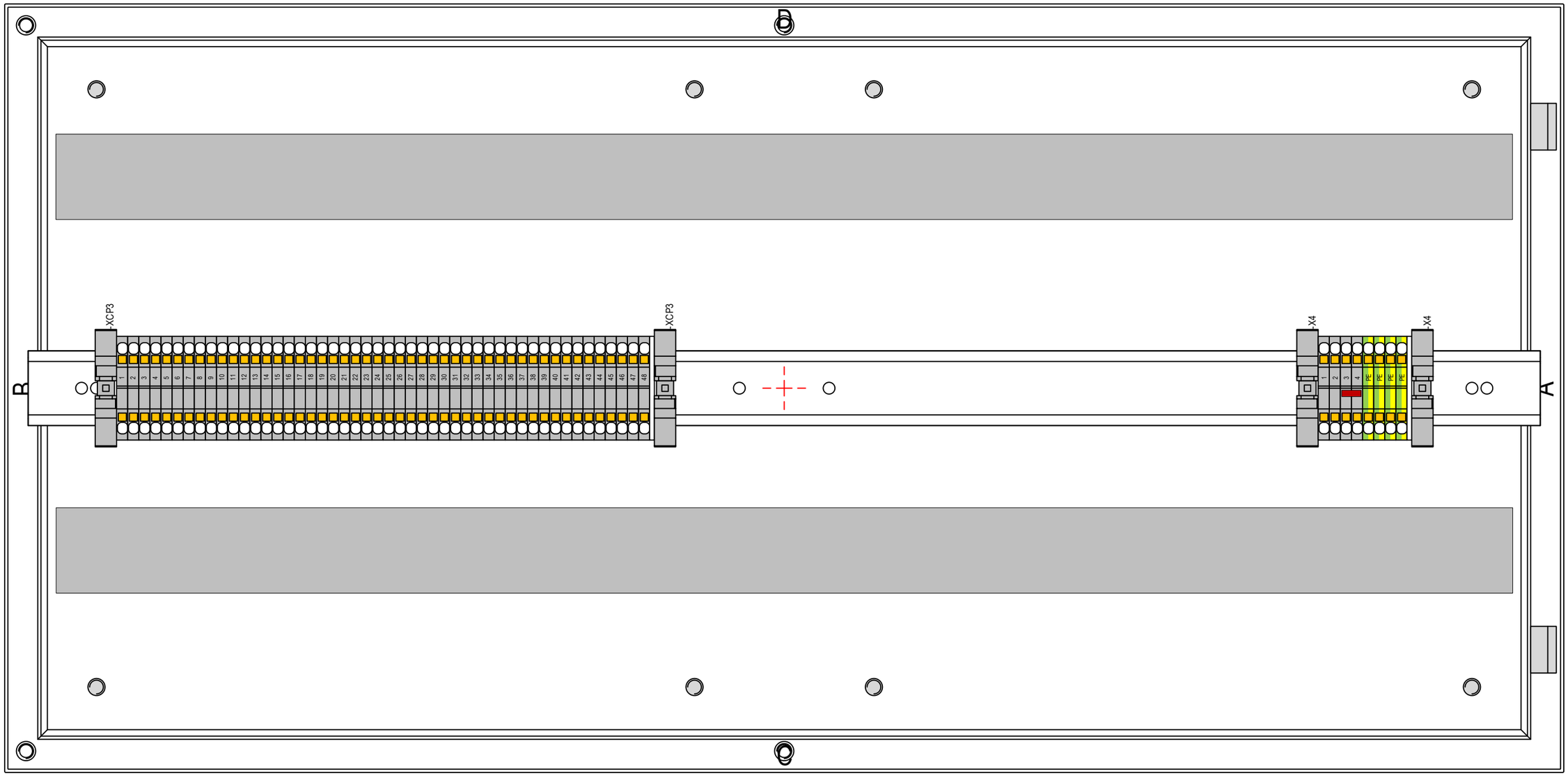

				Drawn:	31-10-2024	elshofjo	**KANON LOADING EQUIPMENT B.V.**		KANON LOADING EQUIPMENT	***Electromach B.V.***	Layout	Int. Revision :	*P242068A91*
				Engineer:	19-9-2024	besselingmi				*Jan Tinbergenstraat 193*	-ECB2 internal	Drawing No.	+JOCC-ECB2
				Approved:			Ref: *P242068, B242352*	Quote:		*7559 SP Hengelo*		*2011280786-001000-24*	Scale: *1 mm : 2 mm / A3*
Index	Revision	Date	name	Changed:			Order: *2011280786*	Item: *001000*	*www.kanon.nl*	*The Netherlands*		Refer to protection notice ISO 16016	Sheet: *23.2*

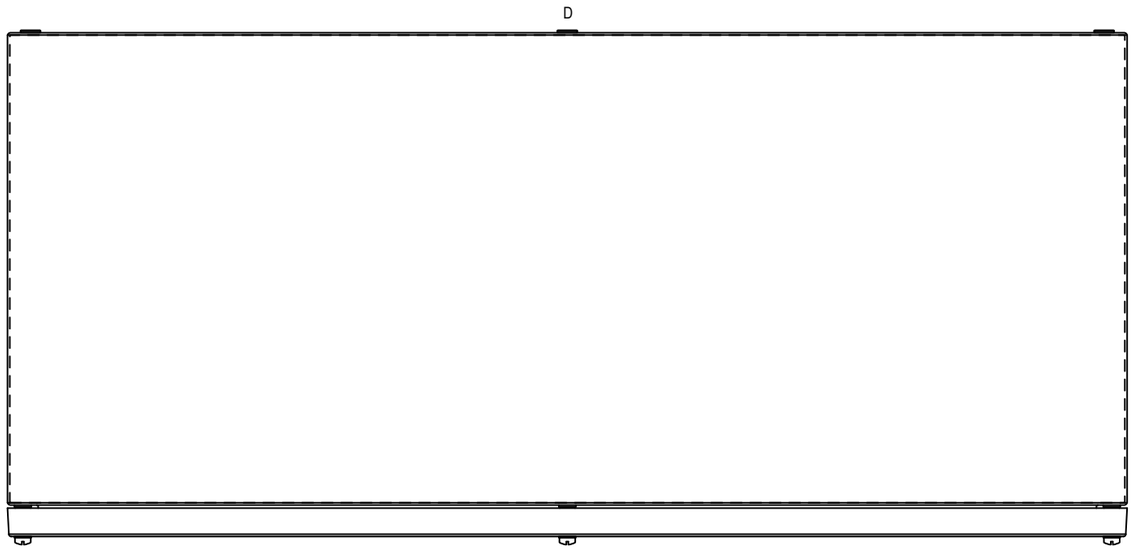

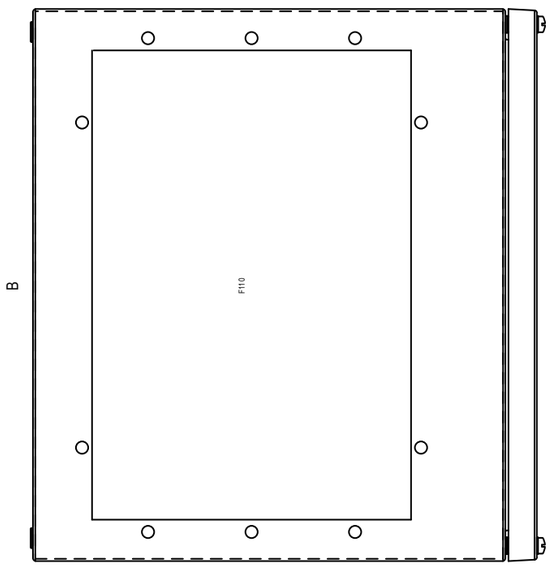

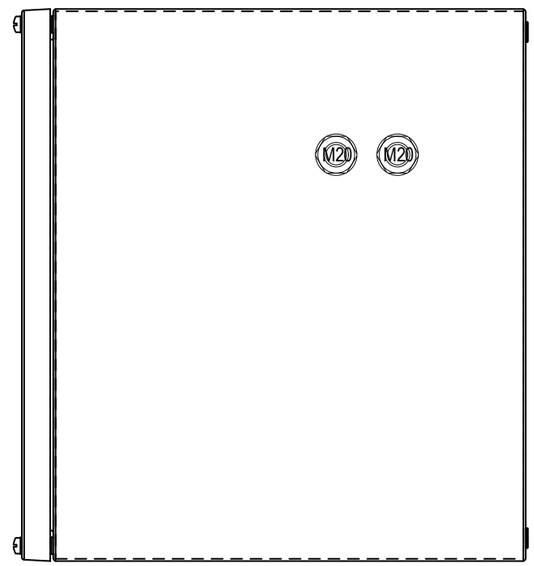

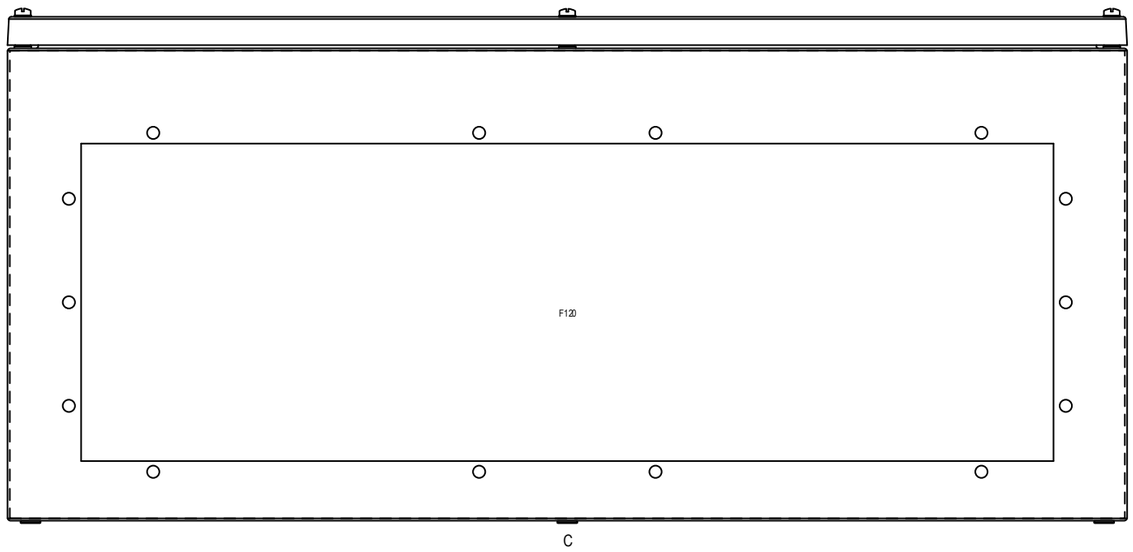

Index	Revision	Date	name				
				Drawn:	31-10-2024	elshofjo	
				Engineer:	19-9-2024	besselingmi	
				Approved:			
				Changed:			

KANON LOADING EQUIPMENT B.V.

Ref: P242068, B242352 Quote:

Order: 2011280786 Item: 001000

KANON LOADING EQUIPMENT

www.kanon.nl

Electromach B.V.
Jan Tinbergenstraat 193
7559 SP Hengelo
The Netherlands
US

Layout
-ECB2 top/bottom/sides

Int. Revision :	P242068A91
Drawing No. 2011280786-001000-24	+JOCC-ECB2
Refer to protection notice ISO 16016	Scale: 1 mm : 4 mm / A3
	Sheet: 23.3

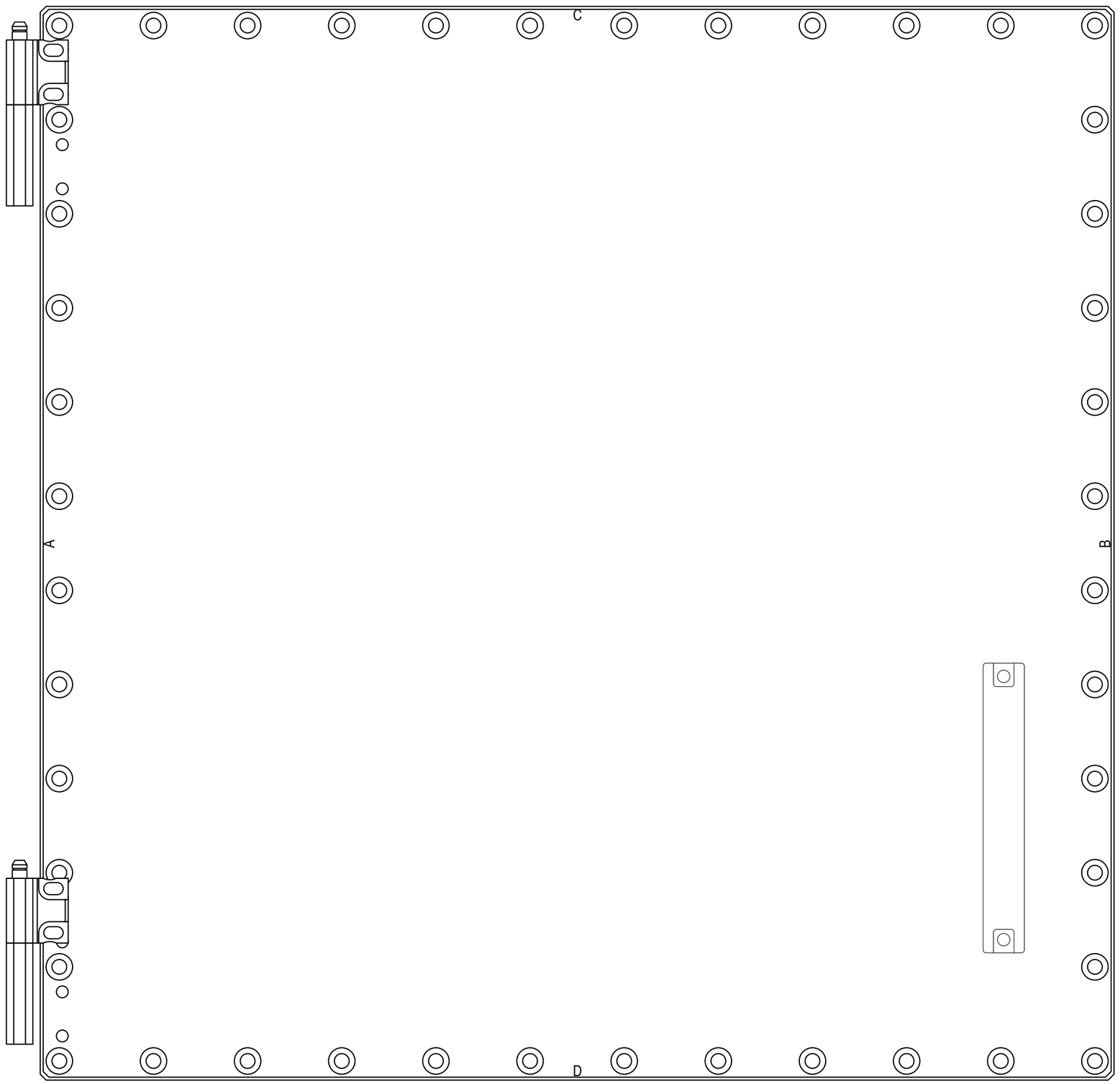

2	*Final as built*	*19-3-2025*	*M.Besseling*	Drawn:	*31-10-2024*	*elshofjo*	***KANON LOADING EQUIPMENT B.V.***		***Electromach B.V.***	Layout	Int. Revision :	*P242068A91*
1	*For approval*	*13-11-2024*	*besselingmi*	Engineer:	*19-9-2024*	*besselingmi*			*Jan Tinbergenstraat 193*	-DCB1 front	Drawing No.	*+JOCC-DCB1*
				Approved:			Ref: *P242068, B242352*	Quote:	*7559 SP Hengelo*		*2011280786-001000-24*	Scale: *1 mm : 3 mm / A3*
Index	Revision	Date	name	Changed:			Order: *2011280786*	Item: *001000*	*The Netherlands*		Refer to protection notice ISO 16016	Sheet: *24.1*

KANON LOADING EQUIPMENT
www.kanon.nl

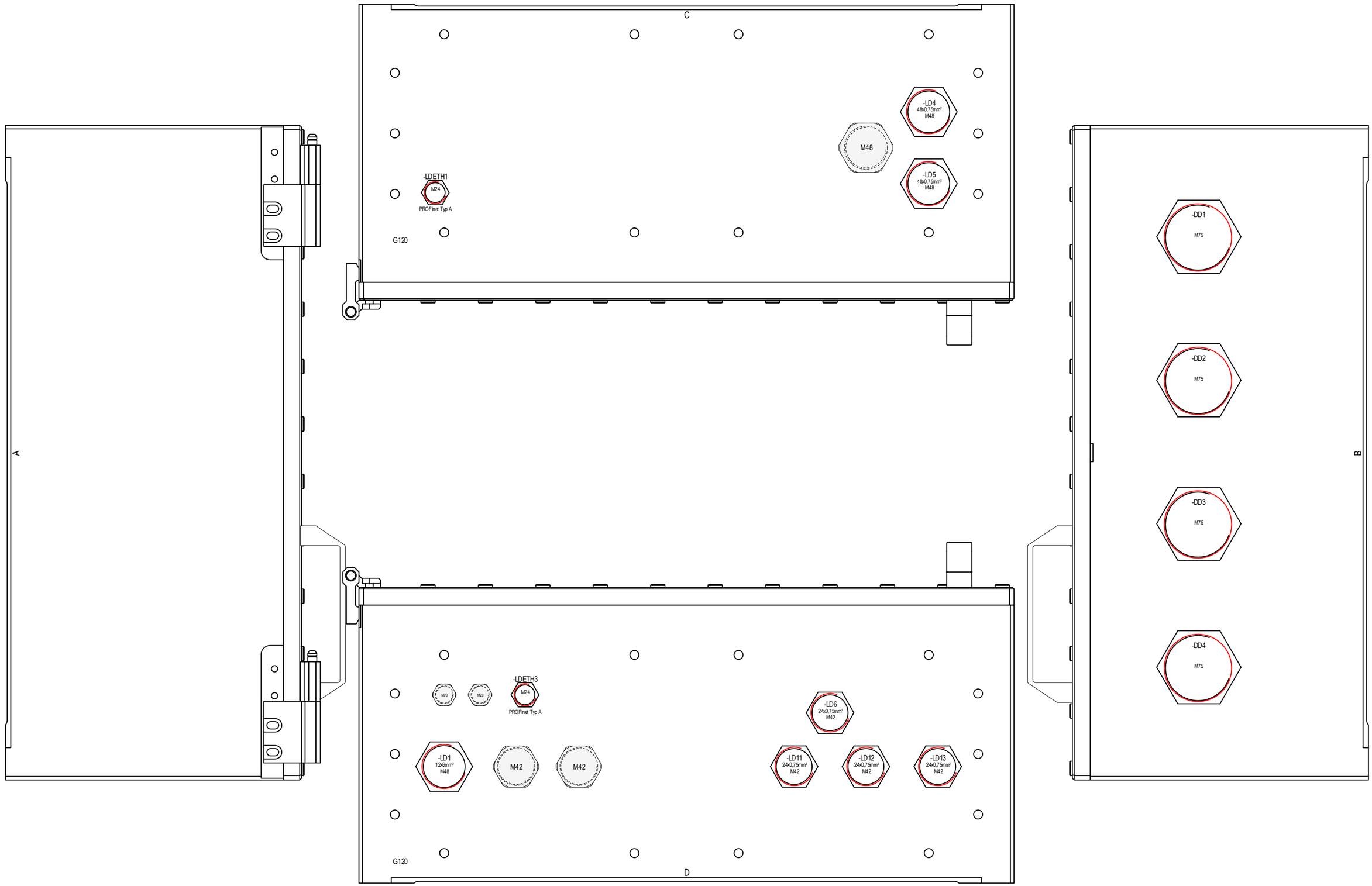

Index	Revision	Date	name			
3	Final as built	19-3-2025	M.Besseling	Drawn:	31-10-2024	elshofjo
2	Final for production	22-11-2024	besselingmi	Engineer:	19-9-2024	besselingmi
1	For approval	13-11-2024	besselingmi	Approved:		
				Changed:		

KANON LOADING EQUIPMENT B.V.

Ref: P242068, B242352 Quote:

Order: 2011280786 Item: 001000

KANON LOADING EQUIPMENT

www.kanon.nl

Electromach B.V.
Jan Tinbergenstraat 193
7559 SP Hengelo
The Netherlands
US

Layout
-DCB1 top/bottom/sides

Int. Revision :	P242068A91
Drawing No. 2011280786-001000-24	+JOCC-DCB1
Scale:	1 mm : 4 mm / A3
Refer to protection notice ISO 16016	Sheet: 24.2

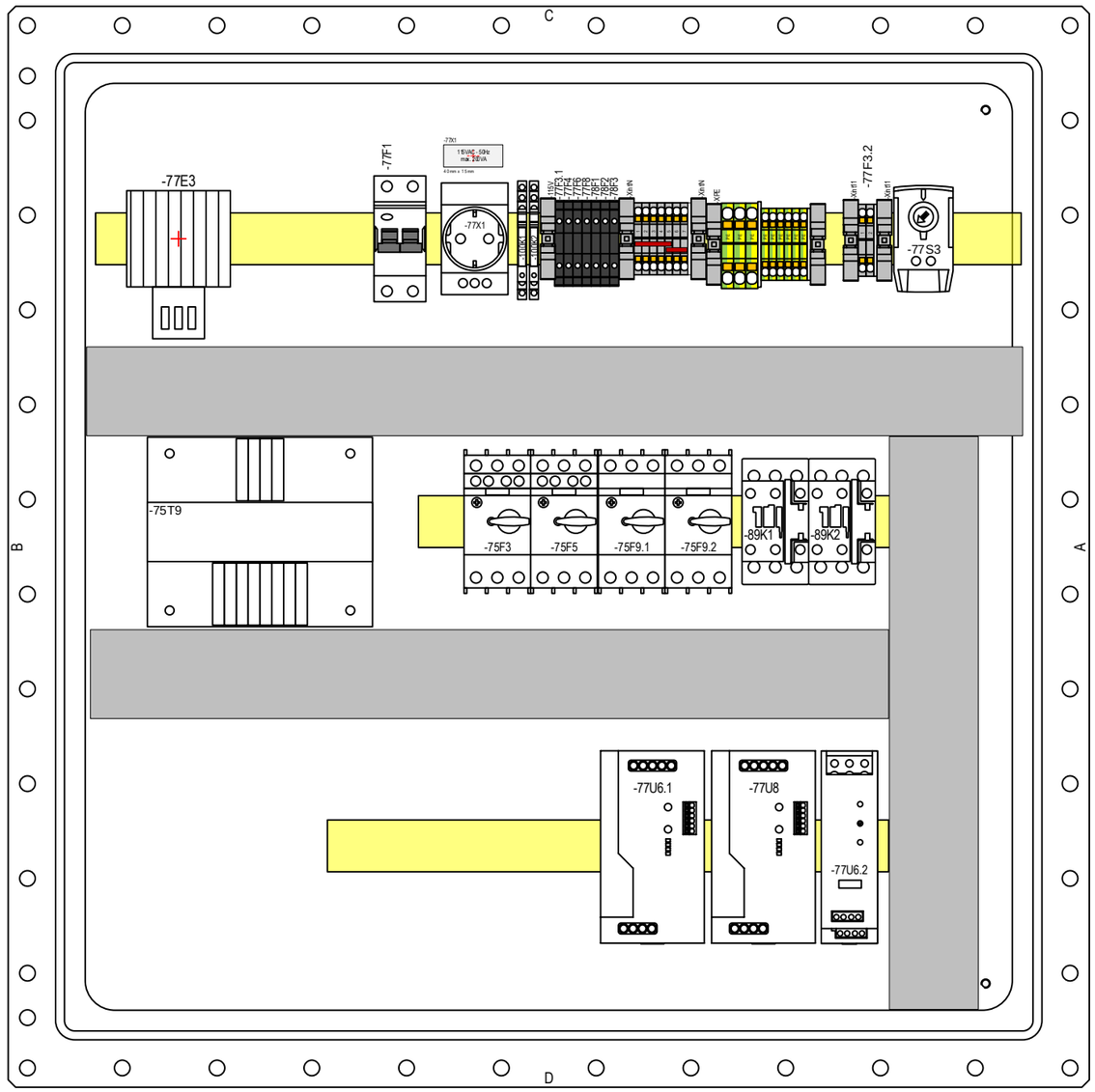

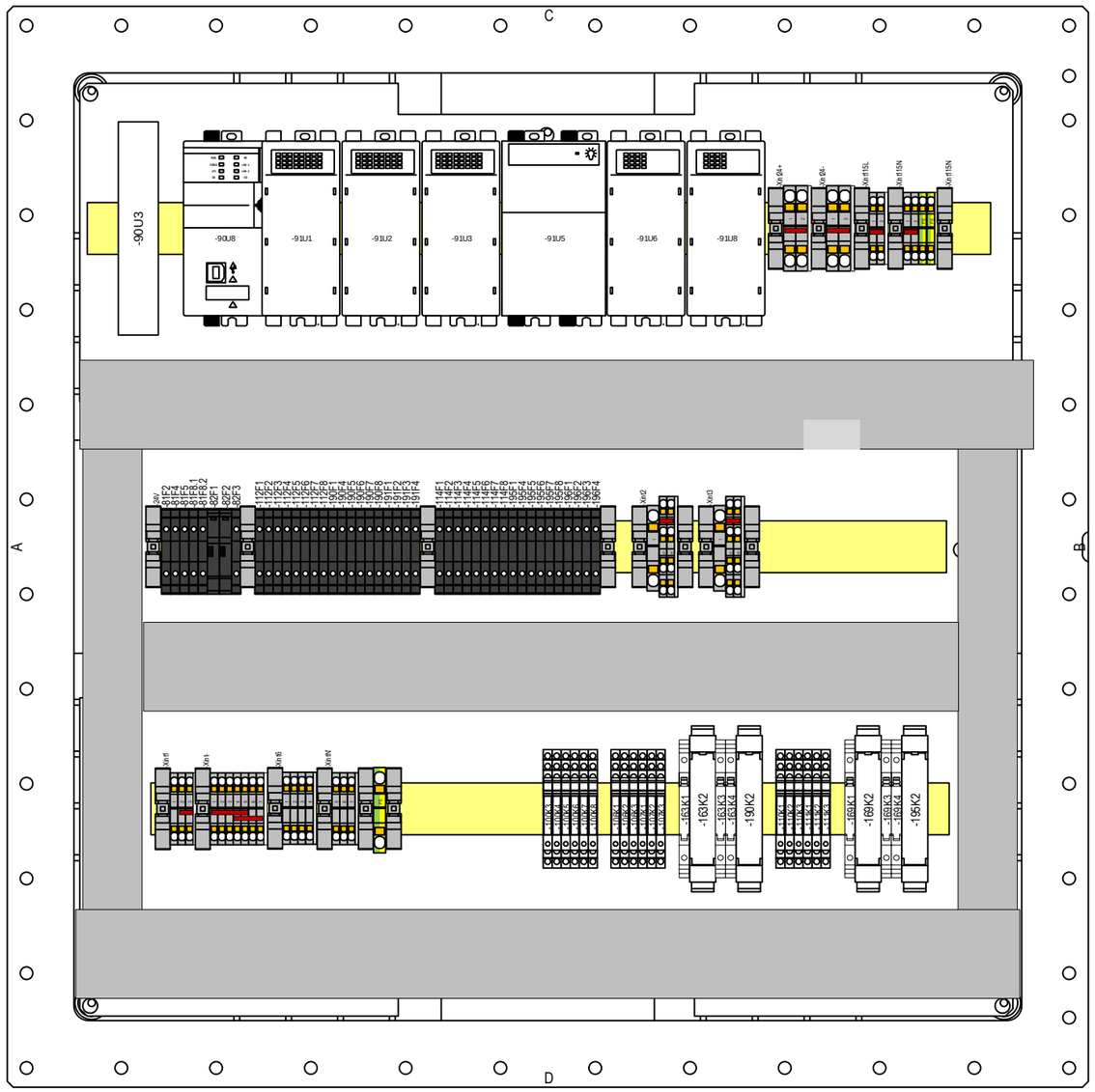

Index	Revision	Date	name			
2	Final as built	19-3-2025	M.Besseling	Drawn:	31-10-2024	elshofjo
1	For approval	13-11-2024	besselingmi	Engineer:	19-9-2024	besselingmi
				Approved:		
				Changed:		

KANON LOADING EQUIPMENT B.V.

Ref: P242068, B242352 Quote:

Order: 2011280786 Item: 001000

KANON LOADING EQUIPMENT

www.kanon.nl

Electromach B.V.
Jan Tinbergenstraat 193
7559 SP Hengelo
The Netherlands
US

Layout
-DCB1 internal

Int. Revision :	P242068A91
Drawing No.	+JOCC-DCB1
2011280786-001000-24	Scale: 1 mm : 4 mm / A3
Refer to protection notice ISO 16016	Sheet: 24.3

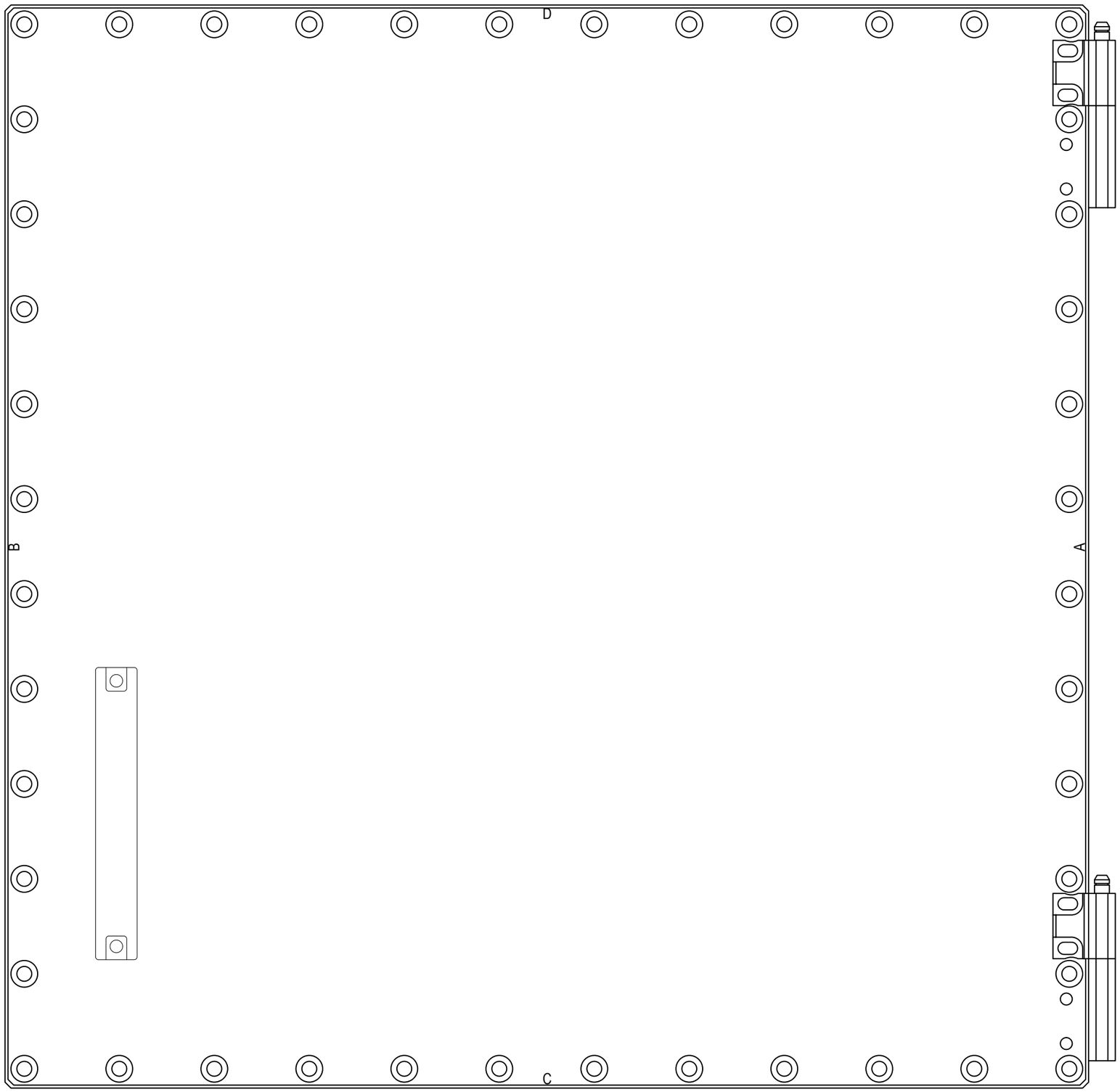

2	*Final as built*	*19-3-2025*	*M.Besseling*	Drawn:	*31-10-2024*	*elshofjo*	***KANON LOADING EQUIPMENT B.V.***		***Electromach B.V.***	Layout	Int. Revision :	*P242068A91*
1	*For approval*	*13-11-2024*	*besselingmi*	Engineer:	*19-9-2024*	*besselingmi*			*Jan Tinbergenstraat 193*	-DCB2 front	Drawing No.	*+JOCC-DCB2*
				Approved:			Ref: *P242068, B242352*	Quote:	*7559 SP Hengelo*		*2011280786-001000-24*	Scale: *1 mm : 3 mm / A3*
Index	Revision	Date	name	Changed:			Order: *2011280786*	Item: *001000*	*The Netherlands*		Refer to protection notice ISO 16016	Sheet: *25.1*

KANON LOADING EQUIPMENT
www.kanon.nl

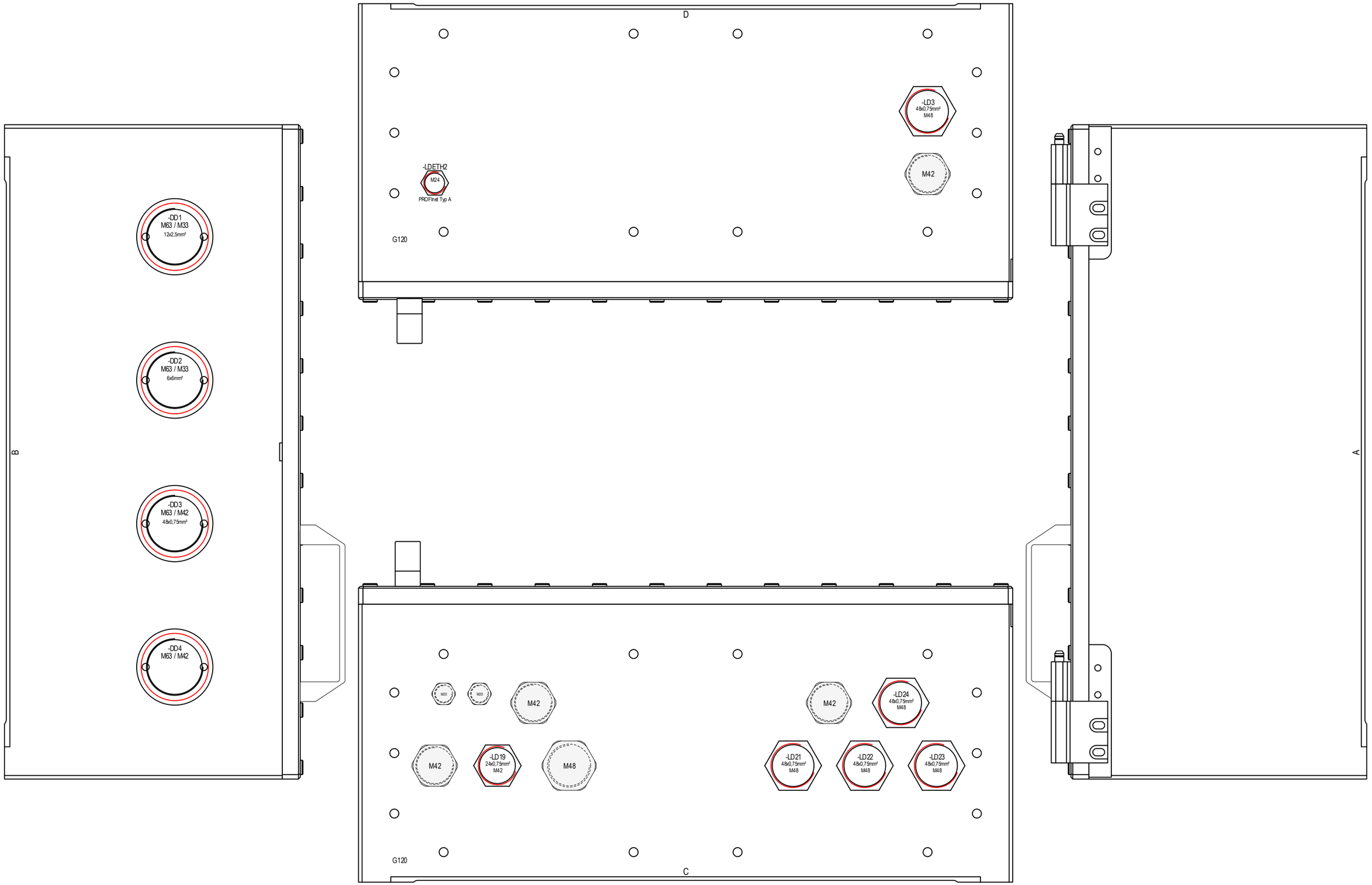

Index	Revision	Date	name			
2	Final as built	19-3-2025	M.Besseling	Drawn:	31-10-2024	elshofjo
1	For approval	13-11-2024	besselingmi	Engineer:	19-9-2024	besselingmi
				Approved:		
				Changed:		

KANON LOADING EQUIPMENT B.V.

Ref: P242068, B242352 Quote:

Order: 2011280786 Item: 001000

KANON LOADING EQUIPMENT

www.kanon.nl

Electromach B.V.
Jan Tinbergenstraat 193
7559 SP Hengelo
The Netherlands
US

Layout
-DCB2 top/bottom/sides

Int. Revision :	P242068A91
Drawing No.	+JOCC-DCB2
2011280786-001000-24	Scale: 1 mm : 4 mm / A3
Refer to protection notice ISO 16016	Sheet: 25.2

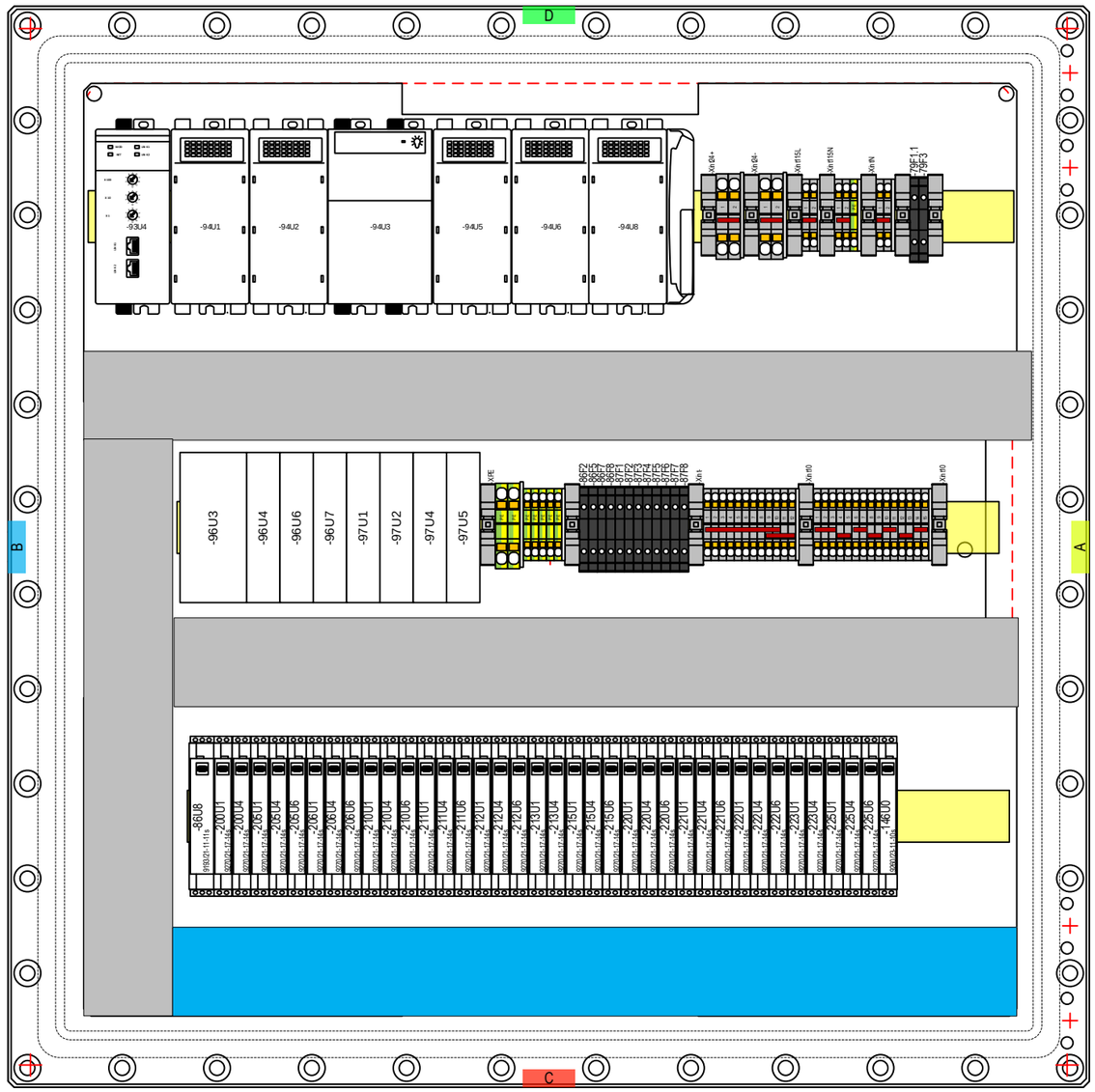

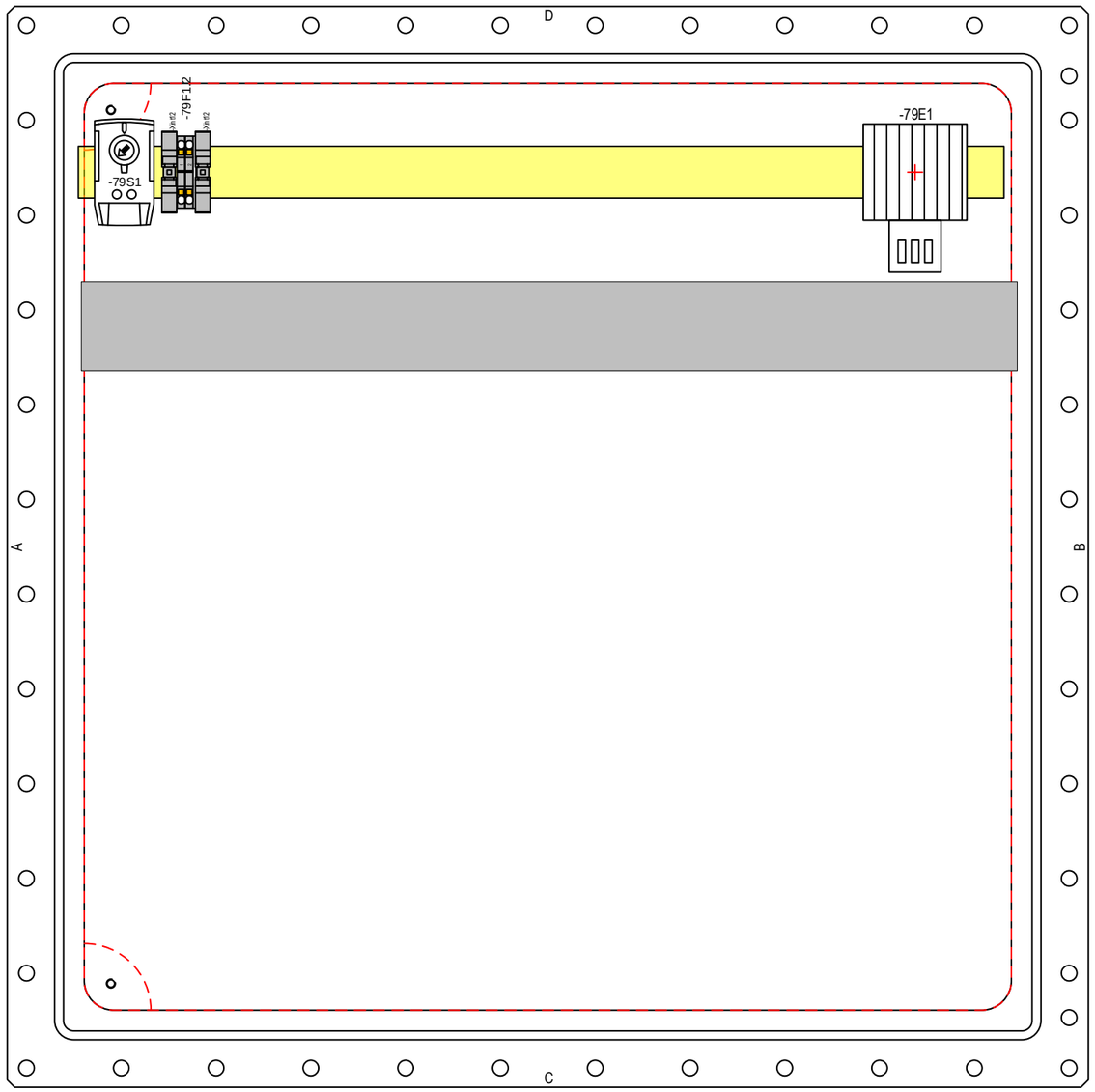

2	*Final as built*	*19-3-2025*	*M.Besseling*	Drawn:	*31-10-2024*	*elshofjo*	***KANON LOADING EQUIPMENT B.V.***		***Electromach B.V.***	Layout	Int. Revision :	*P242068A91*
1	*For approval*	*13-11-2024*	*besselingmi*	Engineer:	*19-9-2024*	*besselingmi*			*Jan Tinbergenstraat 193*	-DCB2 internal	Drawing No.	*+JOCC-DCB2*
				Approved:			Ref: *P242068, B242352*	Quote:	*7559 SP Hengelo*		*2011280786-001000-24*	Scale: *1 mm : 4 mm / A3*
Index	Revision	Date	name	Changed:			Order: *2011280786*	Item: *001000*	*The Netherlands*		Refer to protection notice ISO 16016	Sheet: *25.3*

www.kanon.nl

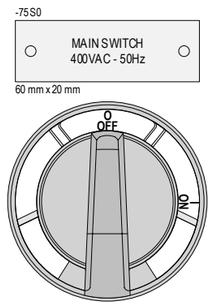

-75S0

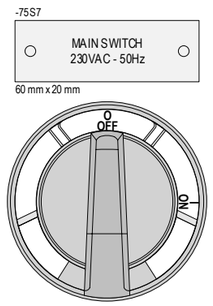

-75S7

2	*Final as built*	*19-3-2025*	*M.Besseling*	Drawn:	*31-10-2024*	*elshofjo*	***KANON LOADING EQUIPMENT B.V.***		***Electromach B.V.***	Layout	Int. Revision :	*P242068A91*
1	*For approval*	*13-11-2024*	*besselingmi*	Engineer:	*19-9-2024*	*besselingmi*			*Jan Tinbergenstraat 193*	-ETB1 front	Drawing No.	*+JOCC-ETB1*
				Approved:			Ref: *P242068, B242352*	Quote:	*7559 SP Hengelo*		*2011280786-001000-24*	Scale: *1 mm : 2 mm / A3*
Index	Revision	Date	name	Changed:			Order: *2011280786*	Item: *001000*	*The Netherlands*		Refer to protection notice ISO 16016	Sheet: *26.1*

KANON LOADING EQUIPMENT
www.kanon.nl

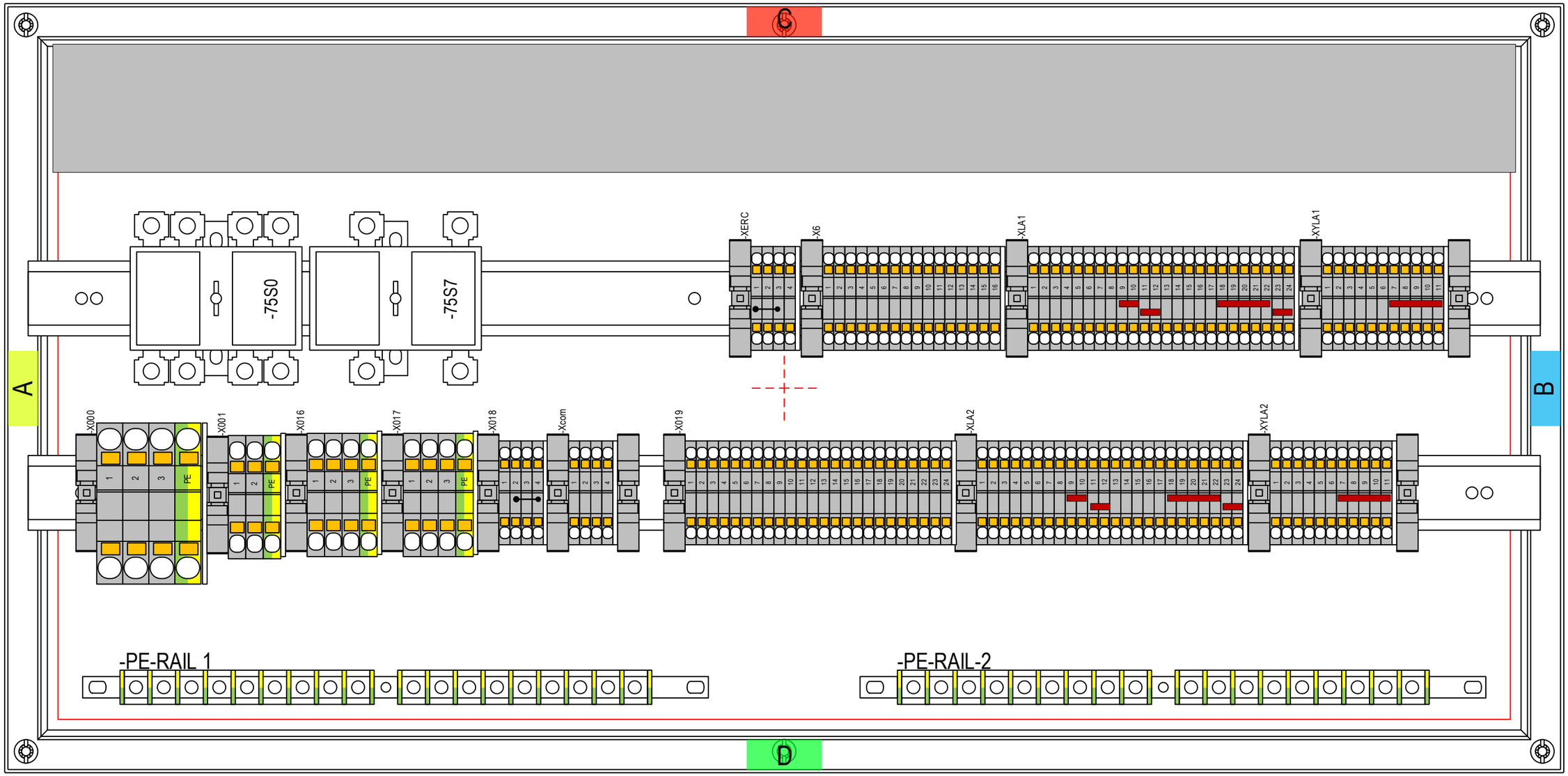

Index	Revision	Date	name			
2	Final as built	19-3-2025	M.Besseling	Drawn:	31-10-2024	elshofjo
1	For approval	13-11-2024	besselingmi	Engineer:	19-9-2024	besselingmi
				Approved:		
				Changed:		

KANON LOADING EQUIPMENT B.V.

Ref: P242068, B242352 Quote:

Order: 2011280786 Item: 001000

KANON LOADING EQUIPMENT

www.kanon.nl

Electromach B.V.
Jan Tinbergenstraat 193
7559 SP Hengelo
The Netherlands

Layout
-ETB1 internal

Int. Revision : P242068A91

Drawing No. +JOCC-ETB1

2011280786-001000-24

Scale: 1 mm : 2 mm / A3

Refer to protection notice ISO 16016

Sheet: 26.2

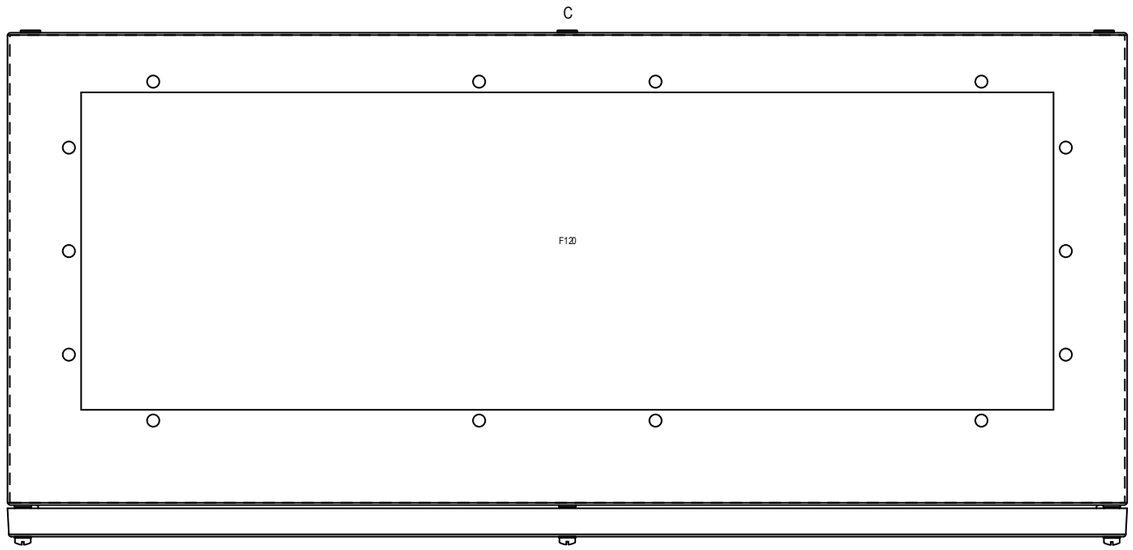

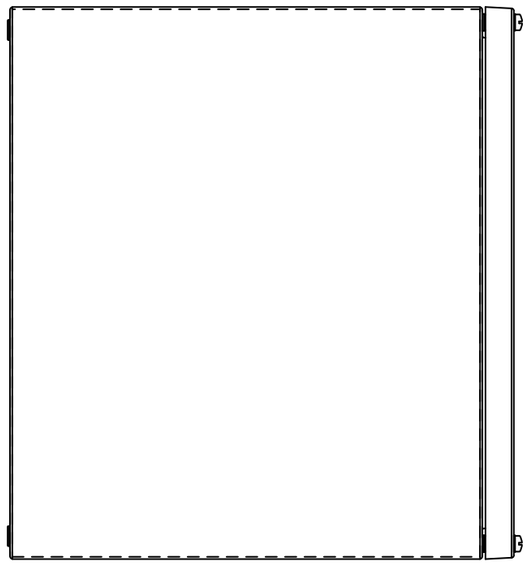

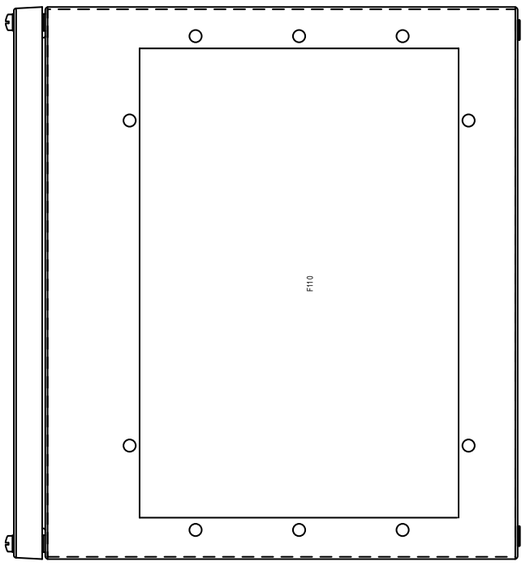

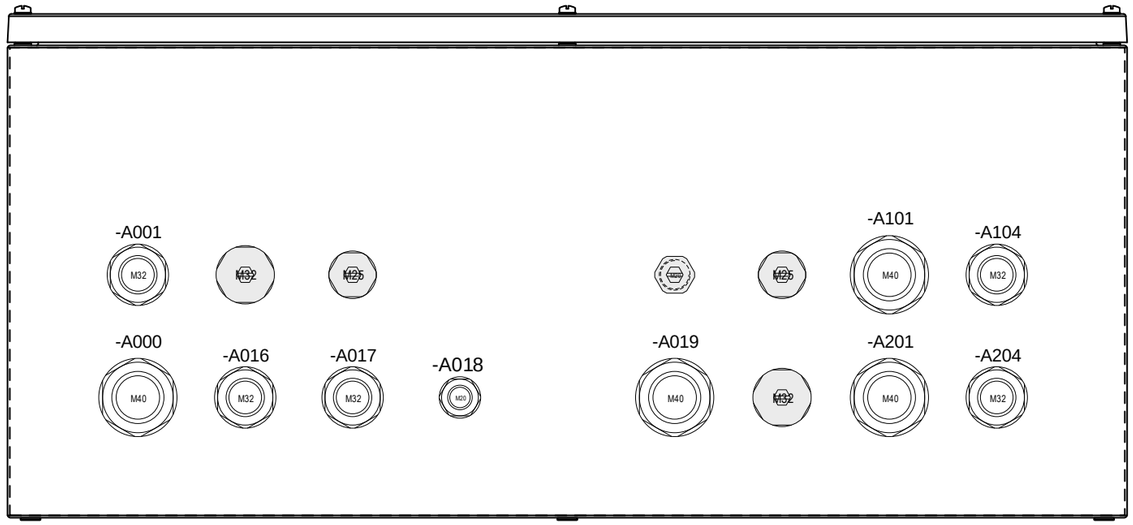

2	*Final as built*	*19-3-2025*	*M.Besseling*	Drawn:	*31-10-2024*	*elshofjo*	***KANON LOADING EQUIPMENT B.V.***		***Electromach B.V.***	Layout	Int. Revision :	*P242068A91*
1	*For approval*	*13-11-2024*	*besselingmi*	Engineer:	*19-9-2024*	*besselingmi*			*Jan Tinbergenstraat 193*	-ETB1 top/bottom/sides	Drawing No.	*+JOCC-ETB1*
				Approved:			Ref: *P242068, B242352*	Quote:	*7559 SP Hengelo*		*2011280786-001000-24*	Scale: *1 mm : 4 mm / A3*
Index	Revision	Date	name	Changed:			Order: *2011280786*	Item: *001000*	*The Netherlands*		Refer to protection notice ISO 16016	Sheet: *26.3*

www.kanon.nl

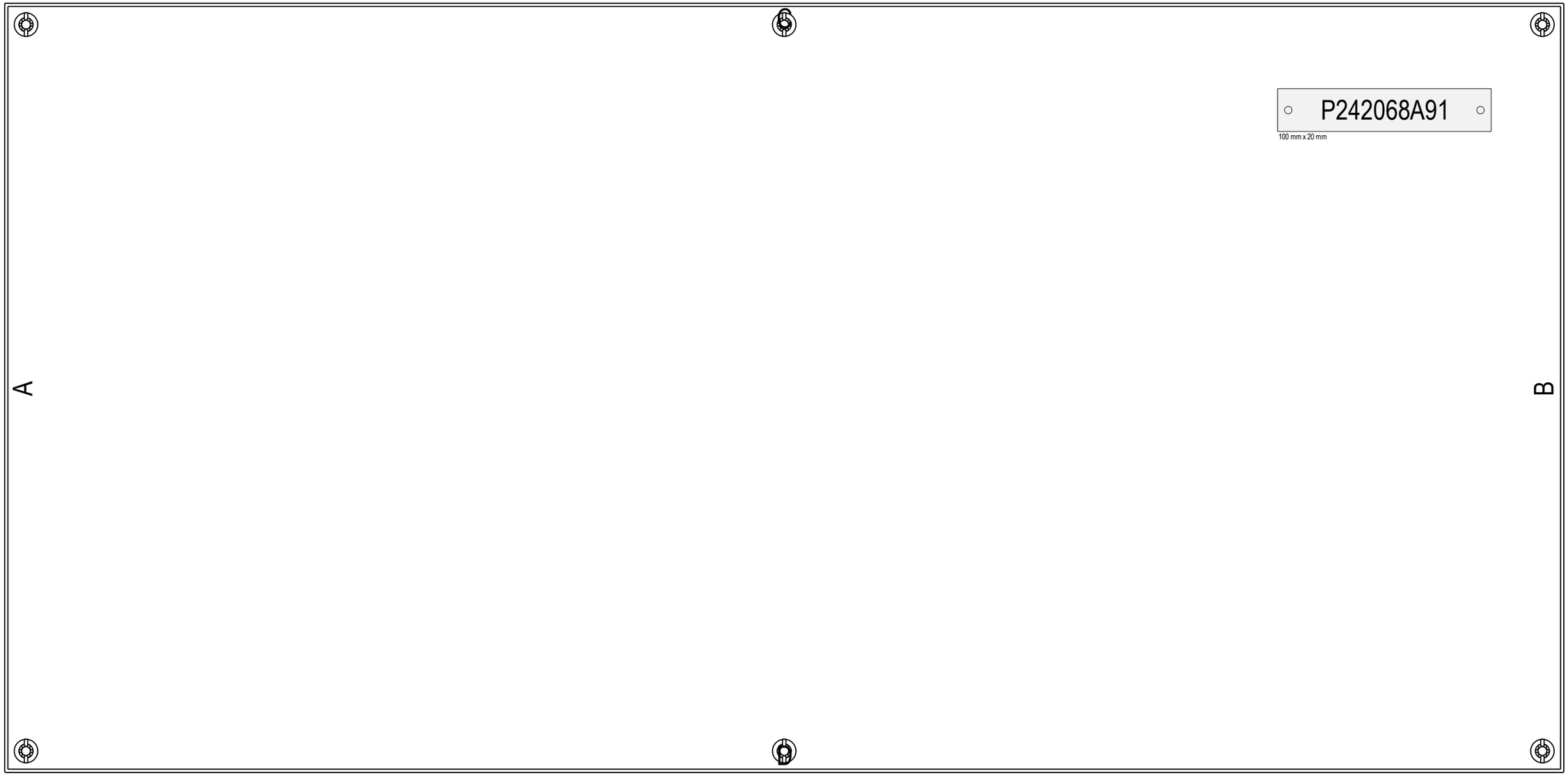

Index	Revision	Date	name			
2	Final as built	19-3-2025	M.Besseling	Drawn:	31-10-2024	elshofjo
1	For approval	13-11-2024	besselingmi	Engineer:	19-9-2024	besselingmi
				Approved:		
				Changed:		

KANON LOADING EQUIPMENT B.V.

Ref: P242068, B242352 Quote:

Order: 2011280786 Item: 001000

KANON LOADING EQUIPMENT

www.kanon.nl

Electromach B.V.
Jan Tinbergenstraat 193
7559 SP Hengelo
The Netherlands
US

Layout
-ETB2 front

Int. Revision :	P242068A91
Drawing No.	+JOCC-ETB2
2011280786-001000-24	Scale: 1 mm : 2 mm / A3
Refer to protection notice ISO 16016	Sheet: 27.1

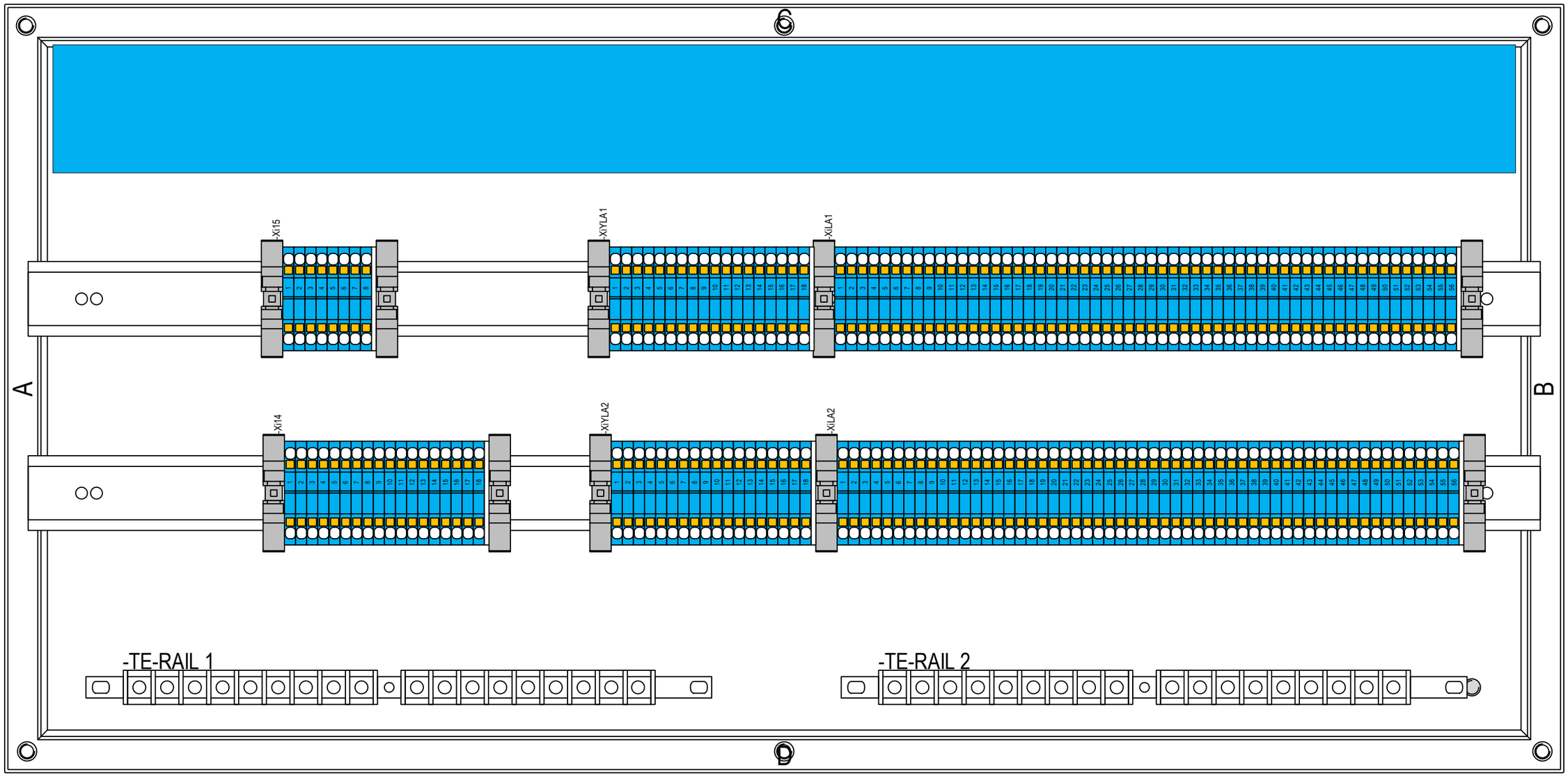

Index	Revision	Date	name	Drawn:	31-10-2024	elshofjo
2	Final as built	19-3-2025	M.Besseling	Engineer:	19-9-2024	besselingmi
1	For approval	13-11-2024	besselingmi	Approved:		
				Changed:		

KANON LOADING EQUIPMENT B.V.

Ref: P242068, B242352 Quote:

Order: 2011280786 Item: 001000

KANON LOADING EQUIPMENT

www.kanon.nl

Electromach B.V.
Jan Tinbergenstraat 193
7559 SP Hengelo
The Netherlands

Layout
-ETB2 internal

Int. Revision :	P242068A91
Drawing No.	+JOCC-ETB2
2011280786-001000-24	Scale: 1 mm : 2 mm / A3
Refer to protection notice ISO 16016	Sheet: 27.2

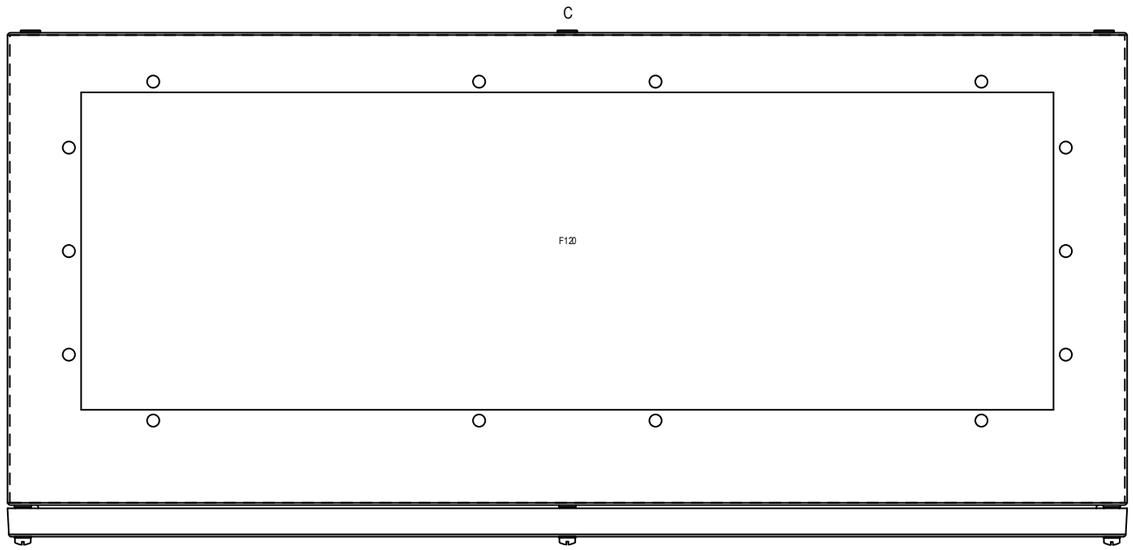

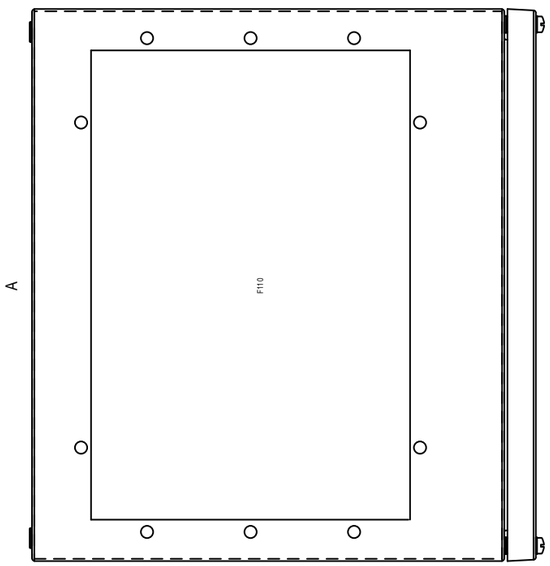

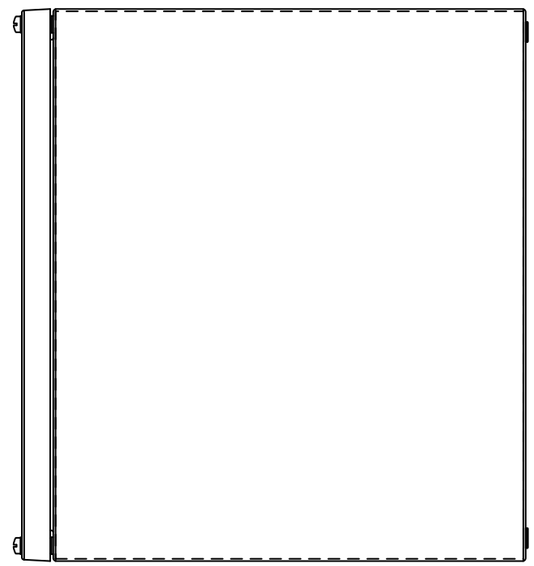

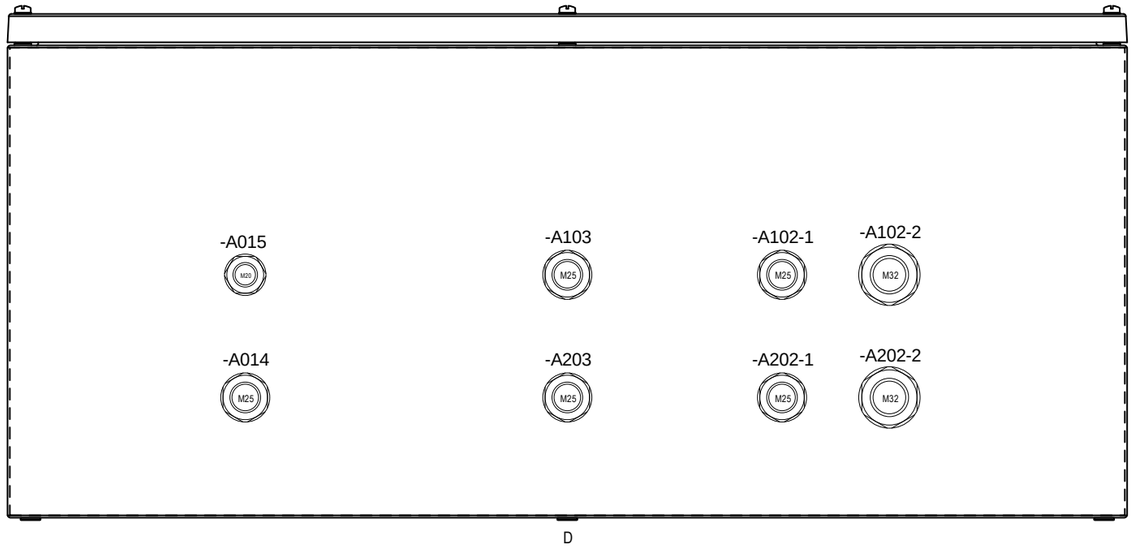

Index	Revision	Date	name
2	Final as built	19-3-2025	M.Besseling
1	For approval	13-11-2024	besselingmi

Drawn:	31-10-2024	elshofjo	
Engineer:	19-9-2024	besselingmi	
Approved:			
Changed:			

KANON LOADING EQUIPMENT B.V.

Ref: P242068, B242352 Quote:

Order: 2011280786 Item: 001000

KANON LOADING EQUIPMENT

www.kanon.nl

Electromach B.V.
Jan Tinbergenstraat 193
7559 SP Hengelo
The Netherlands
US

Layout
-ETB2 top/bottom/sides

Int. Revision :	P242068A91
Drawing No. 2011280786-001000-24	+JOCC-ETB2
Scale:	1 mm : 4 mm / A3
Refer to protection notice ISO 16016	Sheet: 27.3

Parts list

Row	Counted	{}▲ material	Free issue	▲1 part of	▲2 name	▲3 sales text	part number manufacturer	manufacturer
1	1	**300026**		+JOCC		Frame UNP 80-2x995 horizontal high		R. STAHL
2	1	**205133**		+JOCC	-185P1	FL60/C/D50/R/EU, ATX, V6 Strobe, Yodalex, Visual Alarm, IIB+H2, 24Vdc, 5		R. STAHL
3	1	**284513**		+JOCC	-185P3	YA60/21-DS0000-000002-ST0000-0000		R. STAHL
4	1	**229917**		+JOCC -185P1		8161/7-M20-1304 Cable gland M20 4 ... 13 mm Unarmoured cable types , Polya…		R. STAHL
5	1	**246648**		+JOCC -185P1		CMP-20s16PX2KREX Cable gland M20 6,1 ... 13,1 mm All armouring , Nickel-pl…	20S16PX2KREX1RA5	R. STAHL
6	1	**253025**		+JOCC -185P1		CMP-757-D-M2-5 Stopping plug With hex head , M20 , Nickel-plated brass	757DM25	CMP
7	2	**111778**		+JOCC -185P1		CMP-seal white PA M20	20ETS2	CMP
8	1	**210794**		+JOCC -185P1		Fixing kit L-Bracket 1.4404 Yodalex acc.		R. STAHL
9	1	**110865**		+JOCC -185P1		Nut M20x1,5 Ms nickel plated	10063143	WISKA
10	1	**229917**		+JOCC -185P3		8161/7-M20-1304 Cable gland M20 4 ... 13 mm Unarmoured cable types , Polya…		R. STAHL
11	1	**246648**		+JOCC -185P3		CMP-20s16PX2KREX Cable gland M20 6,1 ... 13,1 mm All armouring , Nickel-pl…	20S16PX2KREX1RA5	R. STAHL
12	1	**253025**		+JOCC -185P3		CMP-757-D-M2-5 Stopping plug With hex head , M20 , Nickel-plated brass	757DM25	CMP
13	2	**111778**		+JOCC -185P3		CMP-seal white PA M20	20ETS2	CMP
14	1	**210794**		+JOCC -185P3		Fixing kit L-Bracket 1.4404 Yodalex acc.		R. STAHL
15	1	**110865**		+JOCC -185P3		Nut M20x1,5 Ms nickel plated	10063143	WISKA
16	1	**279729**		+JOCC -DCB1		8264/-995-3..00 Empty enclosure Aluminium		R. STAHL
17	1	**243442**		+JOCC -DCB1		8264/.995-3..0 mount. equipment -60°C ATEX/IECEx (standard)		R. STAHL
18	1	**143237**		+JOCC -DCB1		8264A0240 Earth connection M6 , 10 mm2		R. STAHL
19	1	**107051**		+JOCC -DCB1		bow-type handle GN 528-PA-179-SW		GANTER
20	3	**112434**		+JOCC -DCB1		end bracket CLIPFIX 35	3022218	PHOENIX
21	2	**143309**		+JOCC -DCB1		part of the hinge		R. STAHL
22	2	**143301**		+JOCC -DCB1		part of the hinge left		R. STAHL
23	2	**216238**		+JOCC -DCB1	-75F3 -75F5	Circuit-Breaker Size S0 3P 18-25A 1NO1NC Motor Protection 3RV2021-4DA15	3RV2021-4DA15	SIEMENS
24	1	**309078**		+JOCC -DCB1	-75F9.1	Circuit breaker 3P 4.5-6.3A 1NO+1NC Size S0, transformer prot.	3RV2421-1GA10	SIEMENS
25	1	**216250**		+JOCC -DCB1	-75F9.2	Circuit-Breaker Size S00 3P 7-10A Motor Protection 3RV2011-1JA10	3RV2011-1JA10	SIEMENS
26	1	**302770**		+JOCC -DCB1	-75T9	Transformer 4AM5542-8ED40-0FA0	4AM5542-8ED40-0FA0	SIEMENS
27	1	**298383**		+JOCC -DCB1	-77E3	Heater FLH030 10-150 W with terminal	17003005007	PFANNENBER
28	1	**325534**		+JOCC -DCB1	-77F1	RCBO DS202CRM-C6/0,03	2CSR772199R1064	ABB
29	1	**111589**		+JOCC -DCB1	-77F3.2	temp. fuse 84Grad C		
30	1	**302641**		+JOCC -DCB1	-77S3	Thermostat ETR202-ULC 0-60°C 250V	ETR202	ELDON N.V.
31	1	**278487**		+JOCC -DCB1	-77U6.1	Power supply QUINT4-PS/1AC/24DC/20	2904602	PHOENIX
32	1	**278488**		+JOCC -DCB1	-77U6.2	redundancymodule QUINT-/24DC/2X20/1X40	2320186	PHOENIX
33	1	**278487**		+JOCC -DCB1	-77U8	Power supply QUINT4-PS/1AC/24DC/20	2904602	PHOENIX
34	1	**298372**		+JOCC -DCB1	-77X1	Socket EO-CF/UT/GN	0804025	PHOENIX
35	2	**306267**		+JOCC -DCB1	-89K1 -89K2	Contactor AC3:15kW/400V 1NO1NC Size S0 110V 50/60Hz	3RT2027-1AG20	SIEMENS
36	1	**312223**		+JOCC -DCB1	-90U3	Anybus X-gateway Ethernet/Ethernet 24VDC	ABC4090	HMS
37	1	**298285**		+JOCC -DCB1	-90U8	CompactLogix L3x-Processor Series 1769	1769-L30ER	ROCKWELL
38	3	**298288**		+JOCC -DCB1	-91U1...3	CompactLogix I/O Module 32-Point 24V DC	1769-OB32	ROCKWELL

Index	Revision	Date	name
2	Final as built	19-3-2025	M.Besseling
2	For approval	13-11-2024	besselingmi
2			

Drawn: 31-10-2024 elshofjo
Engineer: 19-9-2024 besselingmi
Approved:
Changed:

KANON LOADING EQUIPMENT B.V.

Ref: P242068, B242352 Quote:
Order: 2011280786 Item: 001000

KANON LOADING EQUIPMENT
www.kanon.nl

Electromach BV
Jan Tinbergenstraat 193
7559 SP Hengelo
The Netherlands

Parts list
+JOCC

Int. Revision : P242068A91
Drawing No.: 2011280786-001000-24
+JOCC
Scale: 1 mm : 1 mm / A3
Refer to protection notice ISO 16016
Sheet: 40 page 1 / 16

Parts list

Row	Counted	{}▲ material	Free issue	▲1 part of	▲2 name	▲3 sales text	part number manufacturer	manufacturer
39	1	**298293**		+JOCC -DCB1	-91U5	Power supply 1769 f. CompactLogix	1769-PB4	ROCKWELL
40	2	**303381**		+JOCC -DCB1	-91U6 -91U8	CompactLogix 16 Pt D/O Relay Module	1769-OW16	ALLEN-BRAD
41	5	**219368**		+JOCC -DCB1	-100K1...5	Relay Module PLC-RSC- 24DC/21	2966171	PHOENIX
42	1	**219393**		+JOCC -DCB1	-100K6	Solid-state relay module PLC-OSC- 24DC/ 24DC/ 2	2966634	PHOENIX
43	14	**219368**		+JOCC -DCB1	-100K7 -100K8 -106K1...3 -107K1...3 -110K1...3 -111K1...3	Relay Module PLC-RSC- 24DC/21	2966171	PHOENIX
44	16	**302007**		+JOCC -DCB1	-112F1...8 -114F1...8	G-fuse link 5x20 T 2A 250V H	179200.2	SIBA
45	1	**284672**		+JOCC -DCB1	-163K1	Relay SIL2 PSR-PS21-1NO-1NC-24DC	2700357	PHOENIX
46	1	**298366**		+JOCC -DCB1	-163K2	Coupling relay PSR-PC50-1NO-1DO-24DC-SC	2904664	PHOENIX
47	3	**284672**		+JOCC -DCB1	-163K3 -163K4 -169K1	Relay SIL2 PSR-PS21-1NO-1NC-24DC	2700357	PHOENIX
48	1	**298366**		+JOCC -DCB1	-169K2	Coupling relay PSR-PC50-1NO-1DO-24DC-SC	2904664	PHOENIX
49	2	**284672**		+JOCC -DCB1	-169K3 -169K4	Relay SIL2 PSR-PS21-1NO-1NC-24DC	2700357	PHOENIX
50	1	**298247**		+JOCC -DCB1	-190F1	G-fuse link 5X20 T 4A 1500A	179200.4	SIBA
51	5	**302007**		+JOCC -DCB1	-190F4...8	G-fuse link 5x20 T 2A 250V H	179200.2	SIBA
52	1	**300931**		+JOCC -DCB1	-190K2	Coupling Relay SIL3 PSR-PC32-2NO-1NC- 24-230UC-SC	2700581	PHOENIX
53	1	**302006**		+JOCC -DCB1	-191F1	G-fuse link 5x20 T 6,3A 250V H	179200.6,3	SIBA
54	1	**302007**		+JOCC -DCB1	-191F2	G-fuse link 5x20 T 2A 250V H	179200.2	SIBA
55	1	**302006**		+JOCC -DCB1	-191F3	G-fuse link 5x20 T 6,3A 250V H	179200.6,3	SIBA
56	1	**302007**		+JOCC -DCB1	-191F4	G-fuse link 5x20 T 2A 250V H	179200.2	SIBA
57	1	**298247**		+JOCC -DCB1	-195F1	G-fuse link 5X20 T 4A 1500A	179200.4	SIBA
58	5	**302007**		+JOCC -DCB1	-195F4...8	G-fuse link 5x20 T 2A 250V H	179200.2	SIBA
59	1	**300931**		+JOCC -DCB1	-195K2	Coupling Relay SIL3 PSR-PC32-2NO-1NC- 24-230UC-SC	2700581	PHOENIX
60	1	**302006**		+JOCC -DCB1	-196F1	G-fuse link 5x20 T 6,3A 250V H	179200.6,3	SIBA
61	1	**302007**		+JOCC -DCB1	-196F2	G-fuse link 5x20 T 2A 250V H	179200.2	SIBA
62	1	**302006**		+JOCC -DCB1	-196F3	G-fuse link 5x20 T 6,3A 250V H	179200.6,3	SIBA
63	1	**302007**		+JOCC -DCB1	-196F4	G-fuse link 5x20 T 2A 250V H	179200.2	SIBA
64	1	**139624**		+JOCC -DCB1	-DD1	8174/103-1203-11 Conductor bushing M33 12 x2,5 mm2 , Cd/Ce = 1.000 /1.000…		R. STAHL
65	1	**139727**		+JOCC -DCB1	-DD2	8174/103-0605-11 Conductor bushing M33 6 x6 mm2 , Cd/Ce = 1.000 /1.000 mm		R. STAHL
66	1	**139428**		+JOCC -DCB1	-DD3	8174/104-4801-11 Conductor bushing M42 48 x0,75 mm2 , Cd/Ce = 1.000 /1.00…		R. STAHL
67	1	**265064**		+JOCC -DCB1	-DD4	CMP-757D plug NB M42	757DM5B5	CMP
68	1	**139718**		+JOCC -DCB1	-LD1	8174/204-1205-33 Conductor bushing ø 41 12 x 6 mm2 , Ld/Le = 1,300 /1,300 …		R. STAHL
69	2	**139432**		+JOCC -DCB1	-LD4 -LD5	8174/204-4801-33 Conductor bushing 48 x 0,75 mm2 Ex d conductor length : 1.…		R. STAHL

Parts list

Row	Counted	{}▲ material	Free issue	▲1 part of	▲2 name	▲3 sales text	part number manufacturer	manufacturer
70	4	**139457**		+JOCC -DCB1	-LD6 -LD11...13	8174/203-2401-33 Conductor bushing 24 x 0,75 mm2 Ex d conductor length : 1.…		R. STAHL
71	2	**140271**		+JOCC -DCB1	-LDETH1 -LDETH3	8175/202-09-04-16-02 Conductor bushing M24 1 x 0,32 mm2 , 2 x 2 x AWG 22/…		R. STAHL
72	2	**253025**		+JOCC -DCB1	-SP20	CMP-757-D-M2-5 Stopping plug With hex head , M20 , Nickel-plated brass	757DM25	CMP
73	2	**265064**		+JOCC -DCB1	-SP42	CMP-757D plug NB M42	757DM5B5	CMP
74	1	**265065**		+JOCC -DCB1	-SP48	CMP-757D plug NB M48	757DM5H5	CMP
75	2	**112434**		+JOCC -DCB1 -24V		end bracket CLIPFIX 35	3022218	PHOENIX
76	1	**302006**		+JOCC -DCB1 -24V	-81F2	G-fuse link 5x20 T 6,3A 250V H	179200.6,3	SIBA
77	2	**298247**		+JOCC -DCB1 -24V	-81F4 -81F5	G-fuse link 5X20 T 4A 1500A	179200.4	SIBA
78	1	**312279**		+JOCC -DCB1 -24V	-81F8.1	G-fuse link 5x20 T 1,0A H	179200.1	SIBA
79	1	**302007**		+JOCC -DCB1 -24V	-81F8.2	G-fuse link 5x20 T 2A 250V H	179200.2	SIBA
80	2	**305023**		+JOCC -DCB1 -24V	-82F1 -82F2	G-fuse link 6,3x32mm, 10A, T	189140.10	SIBA
81	1	**302007**		+JOCC -DCB1 -24V	-82F3	G-fuse link 5x20 T 2A 250V H	179200.2	SIBA
82	5	**219515**		+JOCC -DCB1 -24V -81F2 +JOCC -DCB1 -24V -81F4 +JOCC -DCB1 -24V -81F5 +JOCC -DCB1 -24V -81F8.1 +JOCC -DCB1 -24V -81F8.2		UT 4-HESI (5X20) Fuse terminal , Black	3046032	PHOENIX
83	2	**219523**		+JOCC -DCB1 -24V -82F1 +JOCC -DCB1 -24V -82F2		UT 6-HESI (6,3X32) Fuse terminal , Black	3046401	PHOENIX
84	17	**219515**		+JOCC -DCB1 -24V -82F3 +JOCC -DCB1 -112F1...8 +JOCC -DCB1 -114F1...8		UT 4-HESI (5X20) Fuse terminal , Black	3046032	PHOENIX
85	2	**112434**		+JOCC -DCB1 -115V		end bracket CLIPFIX 35	3022218	PHOENIX
86	1	**298247**		+JOCC -DCB1 -115V	-77F3.1	G-fuse link 5X20 T 4A 1500A	179200.4	SIBA
87	1	**302007**		+JOCC -DCB1 -115V	-77F4	G-fuse link 5x20 T 2A 250V H	179200.2	SIBA
88	4	**302006**		+JOCC -DCB1 -115V	-77F6 -77F8 -78F1 -78F2	G-fuse link 5x20 T 6,3A 250V H	179200.6,3	SIBA
89	1	**302007**		+JOCC -DCB1 -115V	-78F3	G-fuse link 5x20 T 2A 250V H	179200.2	SIBA

Parts list

Row	Counted	{}▲ material	Free issue	▲1 part of	▲2 name	▲3 sales text	part number manufacturer	manufacturer
90	27	**219515**		+JOCC -DCB1 -115V -77F3.1 +JOCC -DCB1 -115V -77F4 +JOCC -DCB1 -115V -77F6 +JOCC -DCB1 -115V -77F8 +JOCC -DCB1 -115V -78F1...3 +JOCC -DCB1 -190F1 +JOCC -DCB1 -190F4...8 +JOCC -DCB1 -191F1...4 +JOCC -DCB1 -195F1 +JOCC -DCB1 -195F4...8 +JOCC -DCB1 -196F1...4		UT 4-HESI (5X20) Fuse terminal , Black	3046032	PHOENIX
91	2	**167098**		+JOCC -DCB1 -DD1 +JOCC -DCB1 -DD2		8193/606 Lead through M33x1,5		R. STAHL
92	2	**167099**		+JOCC -DCB1 -DD3 +JOCC -DCB1 -DD4		8193/608 Lead through M42x1,5		R. STAHL
93	3	**140038**		+JOCC -DCB1 -LD1 +JOCC -DCB1 -LD4 +JOCC -DCB1 -LD5		threaded element M48x1,5		R. STAHL
94	4	**140032**		+JOCC -DCB1 -LD6 +JOCC -DCB1 -LD11...13		Threaded element 8174 M42x1,5		R. STAHL
95	2	**111778**		+JOCC -DCB1 -SP20		CMP-seal white PA M20	20ETS2	CMP
96	1	**112591**		+JOCC -DCB1 -XPE		Cover D-ST 2,5	3030417	PHOENIX
97	1	**257782**		+JOCC -DCB1 -XPE		End plate D-PT 6 Width : 2.200 mm, Grey	3212044	PHOENIX
98	2	**112434**		+JOCC -DCB1 -XPE		end bracket CLIPFIX 35	3022218	PHOENIX
99	6	**257740**		+JOCC -DCB1 -XPE	PE	PT 2,5-PE Protective conductor terminal , Green-yellow	3209536	PHOENIX
100	3	**257772**		+JOCC -DCB1 -XPE	PE	PT 6-PE Protective conductor terminal , Green-yellow	3211822	PHOENIX
101	1	**112591**		+JOCC -DCB1 -Xint1		Cover D-ST 2,5	3030417	PHOENIX
102	1	**112928**		+JOCC -DCB1 -Xint1		Fixed jumper FBS 2-5	3030161	PHOENIX
103	1	**112434**		+JOCC -DCB1 -Xint1		end bracket CLIPFIX 35	3022218	PHOENIX
104	3	**219442**		+JOCC -DCB1 -Xint1	1...3	PT 2,5 Terminal block , Grey	3209510	PHOENIX
105	1	**257784**		+JOCC -DCB1 -Xint2		End plate D-PTTB 2,5 Width : 2,200 mm, Grey	3211634	PHOENIX
106	1	**112928**		+JOCC -DCB1 -Xint2		Fixed jumper FBS 2-5	3030161	PHOENIX
107	2	**112434**		+JOCC -DCB1 -Xint2		end bracket CLIPFIX 35	3022218	PHOENIX
108	1	**257770**		+JOCC -DCB1 -Xint2	1	PT 6 Terminal block , Grey	3211813	PHOENIX

Parts list

Row	Counted	{}▲ material	Free issue	▲1 part of	▲2 name	▲3 sales text	part number manufacturer	manufacturer
109	2	**328664**		+JOCC -DCB1 -Xint2	2,3 4,5	Component terminal diode PTTB 2,5-DIO/U-O	3210936	PHOENIX
110	1	**257784**		+JOCC -DCB1 -Xint3		End plate D-PTTB 2,5 Width : 2,200 mm, Grey	3211634	PHOENIX
111	1	**112928**		+JOCC -DCB1 -Xint3		Fixed jumper FBS 2-5	3030161	PHOENIX
112	2	**112434**		+JOCC -DCB1 -Xint3		end bracket CLIPFIX 35	3022218	PHOENIX
113	1	**257770**		+JOCC -DCB1 -Xint3	1	PT 6 Terminal block , Grey	3211813	PHOENIX
114	2	**328664**		+JOCC -DCB1 -Xint3	2,3 4,5	Component terminal diode PTTB 2,5-DIO/U-O	3210936	PHOENIX
115	1	**112591**		+JOCC -DCB1 -Xint6		Cover D-ST 2,5	3030417	PHOENIX
116	1	**113067**		+JOCC -DCB1 -Xint6		Jumper FBS 4-5	3030187	PHOENIX
117	1	**113069**		+JOCC -DCB1 -Xint6		Jumper FBS 10-5	3030213	PHOENIX
118	1	**112434**		+JOCC -DCB1 -Xint6		end bracket CLIPFIX 35	3022218	PHOENIX
119	4	**219442**		+JOCC -DCB1 -Xint6	1...4	PT 2,5 Terminal block , Grey	3209510	PHOENIX
120	1	**112591**		+JOCC -DCB1 -Xint11		Cover D-ST 2,5	3030417	PHOENIX
121	2	**112434**		+JOCC -DCB1 -Xint11		end bracket CLIPFIX 35	3022218	PHOENIX
122	2	**219442**		+JOCC -DCB1 -Xint11	1 2	PT 2,5 Terminal block , Grey	3209510	PHOENIX
123	1	**257782**		+JOCC -DCB1 -Xint24+		End plate D-PT 6 Width : 2.200 mm, Grey	3212044	PHOENIX
124	1	**113074**		+JOCC -DCB1 -Xint24+		Jumper FBS 2-8	3030284	PHOENIX
125	2	**112434**		+JOCC -DCB1 -Xint24+		end bracket CLIPFIX 35	3022218	PHOENIX
126	2	**257770**		+JOCC -DCB1 -Xint24+	1 2	PT 6 Terminal block , Grey	3211813	PHOENIX
127	1	**257782**		+JOCC -DCB1 -Xint24-		End plate D-PT 6 Width : 2.200 mm, Grey	3212044	PHOENIX
128	1	**113074**		+JOCC -DCB1 -Xint24-		Jumper FBS 2-8	3030284	PHOENIX
129	1	**112434**		+JOCC -DCB1 -Xint24-		end bracket CLIPFIX 35	3022218	PHOENIX
130	2	**257770**		+JOCC -DCB1 -Xint24-	1 2	PT 6 Terminal block , Grey	3211813	PHOENIX
131	1	**112591**		+JOCC -DCB1 -Xint115L		Cover D-ST 2,5	3030417	PHOENIX
132	1	**112928**		+JOCC -DCB1 -Xint115L		Fixed jumper FBS 2-5	3030161	PHOENIX
133	2	**112434**		+JOCC -DCB1 -Xint115L		end bracket CLIPFIX 35	3022218	PHOENIX
134	2	**219442**		+JOCC -DCB1 -Xint115L	1 2	PT 2,5 Terminal block , Grey	3209510	PHOENIX
135	1	**112591**		+JOCC -DCB1 -Xint115N		Cover D-ST 2,5	3030417	PHOENIX
136	1	**112928**		+JOCC -DCB1 -Xint115N		Fixed jumper FBS 2-5	3030161	PHOENIX
137	2	**112434**		+JOCC -DCB1 -Xint115N		end bracket CLIPFIX 35	3022218	PHOENIX

Parts list

Row	Counted	{}▲ material	Free issue	▲1 part of	▲2 name	▲3 sales text	part number manufacturer	manufacturer
138	2	**219442**		+JOCC -DCB1 -Xint115N	1 2	PT 2,5 Terminal block , Grey	3209510	PHOENIX
139	2	**257740**		+JOCC -DCB1 -Xint115N	PE	PT 2,5-PE Protective conductor terminal , Green-yellow	3209536	PHOENIX
140	1	**112591**		+JOCC -DCB1 -Xint-		Cover D-ST 2,5	3030417	PHOENIX
141	1	**113067**		+JOCC -DCB1 -Xint-		Jumper FBS 4-5	3030187	PHOENIX
142	1	**113068**		+JOCC -DCB1 -Xint-		Jumper FBS 5-5	3030190	PHOENIX
143	1	**112434**		+JOCC -DCB1 -Xint-		end bracket CLIPFIX 35	3022218	PHOENIX
144	7	**219442**		+JOCC -DCB1 -Xint-	1...7	PT 2,5 Terminal block , Grey	3209510	PHOENIX
145	1	**112591**		+JOCC -DCB1 -XintN		Cover D-ST 2,5	3030417	PHOENIX
146	1	**113066**		+JOCC -DCB1 -XintN		Jumper FBS 3-5	3030174	PHOENIX
147	1	**113068**		+JOCC -DCB1 -XintN		Jumper FBS 5-5	3030190	PHOENIX
148	2	**112434**		+JOCC -DCB1 -XintN		end bracket CLIPFIX 35	3022218	PHOENIX
149	7	**219442**		+JOCC -DCB1 -XintN	1...7	PT 2,5 Terminal block , Grey	3209510	PHOENIX
150	1	**112591**		+JOCC -DCB1 -XintN'		Cover D-ST 2,5	3030417	PHOENIX
151	1	**113066**		+JOCC -DCB1 -XintN'		Jumper FBS 3-5	3030174	PHOENIX
152	1	**113068**		+JOCC -DCB1 -XintN'		Jumper FBS 5-5	3030190	PHOENIX
153	3	**112434**		+JOCC -DCB1 -XintN'		end bracket CLIPFIX 35	3022218	PHOENIX
154	3	**219442**		+JOCC -DCB1 -XintN'	5...7	PT 2,5 Terminal block , Grey	3209510	PHOENIX
155	1	**257772**		+JOCC -DCB1 -XintN'	PE	PT 6-PE Protective conductor terminal , Green-yellow	3211822	PHOENIX
156	1	**279729**		+JOCC -DCB2		8264/-995-3..00 Empty enclosure Aluminium		R. STAHL
157	1	**243442**		+JOCC -DCB2		8264/.995-3..0 mount. equipment -60°C ATEX/IECEx (standard)		R. STAHL
158	1	**143237**		+JOCC -DCB2		8264A0240 Earth connection M6 , 10 mm2		R. STAHL
159	1	**107051**		+JOCC -DCB2		bow-type handle GN 528-PA-179-SW		GANTER
160	3	**112434**		+JOCC -DCB2		end bracket CLIPFIX 35	3022218	PHOENIX
161	2	**143292**		+JOCC -DCB2		hinge 8264 on the right side		R. STAHL
162	2	**143309**		+JOCC -DCB2		part of the hinge		R. STAHL
163	1	**298383**		+JOCC -DCB2	-79E1	Heater FLH030 10-150 W with terminal	17003005007	PFANNENBER
164	1	**298247**		+JOCC -DCB2	-79F1.1	G-fuse link 5X20 T 4A 1500A	179200.4	SIBA
165	1	**111589**		+JOCC -DCB2	-79F1.2	temp. fuse 84Grad C		
166	1	**302007**		+JOCC -DCB2	-79F3	G-fuse link 5x20 T 2A 250V H	179200.2	SIBA
167	1	**302641**		+JOCC -DCB2	-79S1	Thermostat ETR202-ULC 0-60°C 250V	ETR202	ELDON N.V.
168	1	**302006**		+JOCC -DCB2	-86F2	G-fuse link 5x20 T 6,3A 250V H	179200.6,3	SIBA
169	3	**298247**		+JOCC -DCB2	-86F5 -86F7 -86F8	G-fuse link 5X20 T 4A 1500A	179200.4	SIBA
170	1	**268183**		+JOCC -DCB2	-86U8	9193/21-11-11s Supply modul		R. STAHL
171	8	**298247**		+JOCC -DCB2	-87F1...8	G-fuse link 5X20 T 4A 1500A	179200.4	SIBA
172	1	**297786**		+JOCC -DCB2	-93U4	EtherNet/IP distributed I/O system	1769-AENTR	ALLEN-BRAD

Parts list

Row	Counted	{}▲ material	Free issue	▲1 part of	▲2 name	▲3 sales text	part number manufacturer	manufacturer
173	2	**298604**		+JOCC -DCB2	-94U1 -94U2	Compact I/O Digital-input module	1769-IQ32	ALLEN-BRAD
174	1	**298293**		+JOCC -DCB2	-94U3	Power supply 1769 f. CompactLogix	1769-PB4	ROCKWELL
175	2	**298604**		+JOCC -DCB2	-94U5 -94U6	Compact I/O Digital-input module	1769-IQ32	ALLEN-BRAD
176	1	**291609**		+JOCC -DCB2	-94U8	SPS-I/O-Module 8-Point 1769-IF8	1769-IF8	ALLEN-BRAD
177	1	**302597**		+JOCC -DCB2	-96U3	control unit LED PNOZ m B1 24V dc	772101	PILZ GMBH & CO KG
178	7	**309917**		+JOCC -DCB2	-96U4 -96U6 -96U7 -97U1 -97U2 -97U4 -97U5	Expansion module for PNOZ multi 2 8 safe digital inputs, 4 safe semiconductor …	772142	PILZ GMBH & CO KG
179	1	**261386**		+JOCC -DCB2	-146U0	9260/23-11-10s transmitter supply unit		R. STAHL
180	36	**261411**		+JOCC -DCB2	-200U1 -200U4 -205U1 -205U4 -205U6 -206U1 -206U4 -206U6 -210U1 -210U4 -210U6 -211U1 -211U4 -211U6 -212U1 -212U4 -212U6 -213U1 -213U4 -215U1 -215U4 -215U6 -220U1 -220U4 -220U6 -221U1 -221U4 -221U6 -222U1 -222U4 -222U6	9270/21-17-14s switching repeater		R. STAHL
181	1	**139432**		+JOCC -DCB2	-LD3	8174/204-4801-33 Conductor bushing 48 x 0,75 mm2 Ex d conductor length : 1.…		R. STAHL
182	1	**139457**		+JOCC -DCB2	-LD19	8174/203-2401-33 Conductor bushing 24 x 0,75 mm2 Ex d conductor length : 1.…		R. STAHL

Parts list

Row	Counted	{}▲ material	Free issue	▲1 part of	▲2 name	▲3 sales text	part number manufacturer	manufacturer
183	4	**139432**		+JOCC -DCB2	-LD21...24	8174/204-4801-33 Conductor bushing 48 x 0,75 mm2 Ex d conductor length : 1.…		R. STAHL
184	1	**140271**		+JOCC -DCB2	-LDETH2	8175/202-09-04-16-02 Conductor bushing M24 1 x 0,32 mm2 , 2 x 2 x AWG 22/…		R. STAHL
185	2	**253025**		+JOCC -DCB2	-SP20	CMP-757-D-M2-5 Stopping plug With hex head , M20 , Nickel-plated brass	757DM25	CMP
186	4	**265064**		+JOCC -DCB2	-SP42	CMP-757D plug NB M42	757DM5B5	CMP
187	1	**265065**		+JOCC -DCB2	-SP48	CMP-757D plug NB M48	757DM5H5	CMP
188	14	**219515**		+JOCC -DCB2 -79F1.1 +JOCC -DCB2 -79F3 +JOCC -DCB2 -86F2 +JOCC -DCB2 -86F5 +JOCC -DCB2 -86F7 +JOCC -DCB2 -86F8 +JOCC -DCB2 -87F1...8		UT 4-HESI (5X20) Fuse terminal , Black	3046032	PHOENIX
189	1	**298289**		+JOCC -DCB2 -94U6		CompactLogix Cable termin. IP20 1769-ECR	1769-ECR	ROCKWELL
190	1	**309916**		+JOCC -DCB2 -96U3		Set 4 Screw terminals for PNOZ m B1	750016	PILZ GMBH & CO KG
191	7	**309918**		+JOCC -DCB2 -96U4 +JOCC -DCB2 -96U6 +JOCC -DCB2 -96U7 +JOCC -DCB2 -97U1 +JOCC -DCB2 -97U2 +JOCC -DCB2 -97U4 +JOCC -DCB2 -97U5		Set of spare plug-in terminals, 4-pin in screw technology	750004	PILZ GMBH & CO KG
192	37	**262928**		+JOCC -DCB2 -146U0 +JOCC -DCB2 -200U1…		9294/31-12 pac-Bus 12,5mm		R. STAHL
193	1	**140038**		+JOCC -DCB2 -LD3		threaded element M48x1,5		R. STAHL
194	1	**140032**		+JOCC -DCB2 -LD19		Threaded element 8174 M42x1,5		R. STAHL
195	4	**140038**		+JOCC -DCB2 -LD21...24		threaded element M48x1,5		R. STAHL
196	2	**111778**		+JOCC -DCB2 -SP20		CMP-seal white PA M20	20ETS2	CMP
197	1	**112591**		+JOCC -DCB2 -XPE		Cover D-ST 2,5	3030417	PHOENIX
198	1	**257782**		+JOCC -DCB2 -XPE		End plate D-PT 6 Width : 2.200 mm, Grey	3212044	PHOENIX
199	1	**112434**		+JOCC -DCB2 -XPE		end bracket CLIPFIX 35	3022218	PHOENIX
200	5	**257740**		+JOCC -DCB2 -XPE	PE	PT 2,5-PE Protective conductor terminal , Green-yellow	3209536	PHOENIX
201	3	**257772**		+JOCC -DCB2 -XPE	PE	PT 6-PE Protective conductor terminal , Green-yellow	3211822	PHOENIX
202	1	**112591**		+JOCC -DCB2 -Xint10		Cover D-ST 2,5	3030417	PHOENIX
203	6	**112928**		+JOCC -DCB2 -Xint10		Fixed jumper FBS 2-5	3030161	PHOENIX
204	1	**113066**		+JOCC -DCB2 -Xint10		Jumper FBS 3-5	3030174	PHOENIX
205	2	**112434**		+JOCC -DCB2 -Xint10		end bracket CLIPFIX 35	3022218	PHOENIX
206	15	**219442**		+JOCC -DCB2 -Xint10	1...15	PT 2,5 Terminal block , Grey	3209510	PHOENIX
207	1	**112591**		+JOCC -DCB2 -Xint12		Cover D-ST 2,5	3030417	PHOENIX
208	2	**112434**		+JOCC -DCB2 -Xint12		end bracket CLIPFIX 35	3022218	PHOENIX
209	2	**219442**		+JOCC -DCB2 -Xint12	1 2	PT 2,5 Terminal block , Grey	3209510	PHOENIX

Parts list

Row	Counted	{}▲ material	Free issue	▲1 part of	▲2 name	▲3 sales text	part number manufacturer	manufacturer
210	1	**257782**		+JOCC -DCB2 -Xint24+		End plate D-PT 6 Width : 2.200 mm, Grey	3212044	PHOENIX
211	1	**113074**		+JOCC -DCB2 -Xint24+		Jumper FBS 2-8	3030284	PHOENIX
212	2	**112434**		+JOCC -DCB2 -Xint24+		end bracket CLIPFIX 35	3022218	PHOENIX
213	2	**257770**		+JOCC -DCB2 -Xint24+	1 2	PT 6 Terminal block , Grey	3211813	PHOENIX
214	1	**257782**		+JOCC -DCB2 -Xint24-		End plate D-PT 6 Width : 2.200 mm, Grey	3212044	PHOENIX
215	1	**113074**		+JOCC -DCB2 -Xint24-		Jumper FBS 2-8	3030284	PHOENIX
216	2	**112434**		+JOCC -DCB2 -Xint24-		end bracket CLIPFIX 35	3022218	PHOENIX
217	2	**257770**		+JOCC -DCB2 -Xint24-	1 2	PT 6 Terminal block , Grey	3211813	PHOENIX
218	1	**112591**		+JOCC -DCB2 -Xint115L		Cover D-ST 2,5	3030417	PHOENIX
219	1	**112928**		+JOCC -DCB2 -Xint115L		Fixed jumper FBS 2-5	3030161	PHOENIX
220	2	**112434**		+JOCC -DCB2 -Xint115L		end bracket CLIPFIX 35	3022218	PHOENIX
221	2	**219442**		+JOCC -DCB2 -Xint115L	1 2	PT 2,5 Terminal block , Grey	3209510	PHOENIX
222	1	**112591**		+JOCC -DCB2 -Xint115N		Cover D-ST 2,5	3030417	PHOENIX
223	1	**112928**		+JOCC -DCB2 -Xint115N		Fixed jumper FBS 2-5	3030161	PHOENIX
224	2	**112434**		+JOCC -DCB2 -Xint115N		end bracket CLIPFIX 35	3022218	PHOENIX
225	2	**219442**		+JOCC -DCB2 -Xint115N	1 2	PT 2,5 Terminal block , Grey	3209510	PHOENIX
226	1	**257740**		+JOCC -DCB2 -Xint115N	PE	PT 2,5-PE Protective conductor terminal , Green-yellow	3209536	PHOENIX
227	1	**112591**		+JOCC -DCB2 -Xint-		Cover D-ST 2,5	3030417	PHOENIX
228	1	**113067**		+JOCC -DCB2 -Xint-		Jumper FBS 4-5	3030187	PHOENIX
229	1	**113069**		+JOCC -DCB2 -Xint-		Jumper FBS 10-5	3030213	PHOENIX
230	2	**112434**		+JOCC -DCB2 -Xint-		end bracket CLIPFIX 35	3022218	PHOENIX
231	12	**219442**		+JOCC -DCB2 -Xint-	1...12	PT 2,5 Terminal block , Grey	3209510	PHOENIX
232	1	**112591**		+JOCC -DCB2 -XintN		Cover D-ST 2,5	3030417	PHOENIX
233	1	**112928**		+JOCC -DCB2 -XintN		Fixed jumper FBS 2-5	3030161	PHOENIX
234	2	**112434**		+JOCC -DCB2 -XintN		end bracket CLIPFIX 35	3022218	PHOENIX
235	2	**219442**		+JOCC -DCB2 -XintN	1 2	PT 2,5 Terminal block , Grey	3209510	PHOENIX
236	1	**310984**		+JOCC -ECB1		8150/5-E-0730-0360-330-3311 Conn.chamber		R. STAHL
237	1	**200886**		+JOCC -ECB1		8150A0074-352-251-10-E-F110 Frame		R. STAHL
238	1	**200890**		+JOCC -ECB1		8150A0074-680-251-10-D-F120 Frame		R. STAHL
239	4	**254344**		+JOCC -ECB1		Ground support 8150 H=65mm, L=280mm CC		R. STAHL

Parts list

Row	Counted	{}▲ material	Free issue	▲1 part of	▲2 name	▲3 sales text	part number manufacturer	manufacturer
240	2	**103133**		+JOCC -ECB1		label plastic engravable screwed		R. STAHL
241	1	**202827**		+JOCC -ECB1		mounting rail TS35 in enclosure 8150 for terminals length: 708mm		R. STAHL
242	26	**254802**		+JOCC -ECB1	-104P1...8 -105P1...5 -108P1...8 -109P1...5	8010A6-21-1 LED indicator lamp For front installation Ex e , Polyamide		R. STAHL
243	6	**241316**		+JOCC -ECB1	-SP1...4 -SP6 -SP8	8602A3-733-S Closing part		R. STAHL
244	2	**223117**		+JOCC -ECB1 -104P1 +JOCC -ECB1 -104P2		8602A3-054-S-C01 Indicator lamp bezel , Red		R. STAHL
245	9	**223121**		+JOCC -ECB1 -104P3...8 +JOCC -ECB1 -105P1...3		8602A3-054-S-C05 Indicator lamp bezel , Yellow		R. STAHL
246	1	**223118**		+JOCC -ECB1 -105P4		8602A3-054-S-C02 Indicator lamp bezel, Green		R. STAHL
247	3	**223117**		+JOCC -ECB1 -105P5 +JOCC -ECB1 -108P1 +JOCC -ECB1 -108P2		8602A3-054-S-C01 Indicator lamp bezel , Red		R. STAHL
248	9	**223121**		+JOCC -ECB1 -108P3...8 +JOCC -ECB1 -109P1...3		8602A3-054-S-C05 Indicator lamp bezel , Yellow		R. STAHL
249	1	**223118**		+JOCC -ECB1 -109P4		8602A3-054-S-C02 Indicator lamp bezel, Green		R. STAHL
250	1	**223117**		+JOCC -ECB1 -109P5		8602A3-054-S-C01 Indicator lamp bezel , Red		R. STAHL
251	1	**112591**		+JOCC -ECB1 -XCP4		Cover D-ST 2,5	3030417	PHOENIX
252	2	**112434**		+JOCC -ECB1 -XCP4		end bracket CLIPFIX 35	3022218	PHOENIX
253	48	**219442**		+JOCC -ECB1 -XCP4	1...48	PT 2,5 Terminal block , Grey	3209510	PHOENIX
254	1	**112591**		+JOCC -ECB1 -XCP5		Cover D-ST 2,5	3030417	PHOENIX
255	2	**112434**		+JOCC -ECB1 -XCP5		end bracket CLIPFIX 35	3022218	PHOENIX
256	48	**219442**		+JOCC -ECB1 -XCP5	1...48	PT 2,5 Terminal block , Grey	3209510	PHOENIX
257	1	**112591**		+JOCC -ECB1 -XETH		Cover D-ST 2,5	3030417	PHOENIX
258	2	**112434**		+JOCC -ECB1 -XETH		end bracket CLIPFIX 35	3022218	PHOENIX
259	4	**219442**		+JOCC -ECB1 -XETH	1...4	PT 2,5 Terminal block , Grey	3209510	PHOENIX
260	1	**319292**		+JOCC -ECB1 -XETH	TE	PT 2,5-FE terminal black-yellow	1077080	PHOENIX
261	1	**310984**		+JOCC -ECB2		8150/5-E-0730-0360-330-3311 Conn.chamber		R. STAHL
262	1	**200886**		+JOCC -ECB2		8150A0074-352-251-10-E-F110 Frame		R. STAHL
263	1	**200890**		+JOCC -ECB2		8150A0074-680-251-10-D-F120 Frame		R. STAHL
264	4	**254344**		+JOCC -ECB2		Ground support 8150 H=65mm, L=280mm CC		R. STAHL
265	1	**202827**		+JOCC -ECB2		mounting rail TS35 in enclosure 8150 for terminals length: 708mm		R. STAHL
266	8	**254802**		+JOCC -ECB2	-101P1...6 -101P8 -102P1	8010A6-21-1 LED indicator lamp For front installation Ex e , Polyamide		R. STAHL

Parts list

Row	Counted	{}▲ material	Free issue	▲1 part of	▲2 name	▲3 sales text	part number manufacturer	manufacturer
267	1	**128360**		+JOCC -ECB2	-130S1	8008/2-016 Control switch , No. of poles : 2		R. STAHL
268	2	**254855**		+JOCC -ECB2	-130S2 -130S3	8082A3-21-3-0 , Contact element For front installation Contact material : Silver-…		R. STAHL
269	1	**128346**		+JOCC -ECB2	-130S5	8008/2-113 Control switch , No. of poles : 4		R. STAHL
270	1	**128360**		+JOCC -ECB2	-130S7	8008/2-016 Control switch , No. of poles : 2		R. STAHL
271	6	**254855**		+JOCC -ECB2	-131S1...6	8082A3-21-3-0 , Contact element For front installation Contact material : Silver-…		R. STAHL
272	1	**128360**		+JOCC -ECB2	-131S7	8008/2-016 Control switch , No. of poles : 2		R. STAHL
273	9	**254855**		+JOCC -ECB2	-131S8 -132S1...8	8082A3-21-3-0 , Contact element For front installation Contact material : Silver-…		R. STAHL
274	1	**128360**		+JOCC -ECB2	-133S2	8008/2-016 Control switch , No. of poles : 2		R. STAHL
275	1	**254855**		+JOCC -ECB2	-133S4	8082A3-21-3-0 , Contact element For front installation Contact material : Silver-…		R. STAHL
276	1	**254854**		+JOCC -ECB2	-160S1	8082A3-21-3-0 , Contact element For front installation Contact material : Silver-…		R. STAHL
277	2	**229917**		+JOCC -ECB2	-A20	8161/7-M20-1304 Cable gland M20 4 ... 13 mm Unarmoured cable types , Polya…		R. STAHL
278	8	**241316**		+JOCC -ECB2	-SP1...4 -SP6...9	8602A3-733-S Closing part		R. STAHL
279	1	**223118**		+JOCC -ECB2 -101P1		8602A3-054-S-C02 Indicator lamp bezel , Green		R. STAHL
280	5	**223117**		+JOCC -ECB2 -101P2...6		8602A3-054-S-C01 Indicator lamp bezel , Red		R. STAHL
281	1	**223121**		+JOCC -ECB2 -101P8		8602A3-054-S-C05 Indicator lamp bezel , Yellow		R. STAHL
282	1	**223117**		+JOCC -ECB2 -102P1		8602A3-054-S-C01 Indicator lamp bezel , Red		R. STAHL
283	1	**264000**		+JOCC -ECB2 -130S1		8602A3-732-S-90G-E99 Rotary actuator, small , Not padlockable		R. STAHL
284	1	**261632**		+JOCC -ECB2 -130S1		Adaptor compl. 8602/3 front. f. 8008/2-0		R. STAHL
285	1	**215425**		+JOCC -ECB2 -130S2		8602/3 Button label , Black		R. STAHL
286	1	**223682**		+JOCC -ECB2 -130S2		8602A3-001-S Pushbutton		R. STAHL
287	1	**215425**		+JOCC -ECB2 -130S3		8602/3 Button label , Black		R. STAHL
288	1	**223682**		+JOCC -ECB2 -130S3		8602A3-001-S Pushbutton		R. STAHL
289	1	**264000**		+JOCC -ECB2 -130S5		8602A3-732-S-90G-E99 Rotary actuator, small , Not padlockable		R. STAHL
290	1	**261633**		+JOCC -ECB2 -130S5		Adaptor compl. 8602/3 front. f. 8008/2-1		R. STAHL
291	1	**264000**		+JOCC -ECB2 -130S7		8602A3-732-S-90G-E99 Rotary actuator, small , Not padlockable		R. STAHL
292	1	**261632**		+JOCC -ECB2 -130S7		Adaptor compl. 8602/3 front. f. 8008/2-0		R. STAHL
293	1	**227763**		+JOCC -ECB2 -131S1		8602/3 Button label , Black , Vertical arrow at 90 degrees		R. STAHL
294	1	**223682**		+JOCC -ECB2 -131S1		8602A3-001-S Pushbutton		R. STAHL
295	1	**227763**		+JOCC -ECB2 -131S2		8602/3 Button label , Black , Vertical arrow at 90 degrees		R. STAHL
296	1	**223682**		+JOCC -ECB2 -131S2		8602A3-001-S Pushbutton		R. STAHL
297	1	**227778**		+JOCC -ECB2 -131S3		8602/3 Button label , Black , Right arrow at 45 degrees		R. STAHL
298	1	**223682**		+JOCC -ECB2 -131S3		8602A3-001-S Pushbutton		R. STAHL
299	1	**227778**		+JOCC -ECB2 -131S4		8602/3 Button label , Black , Right arrow at 45 degrees		R. STAHL
300	1	**223682**		+JOCC -ECB2 -131S4		8602A3-001-S Pushbutton		R. STAHL
301	1	**227763**		+JOCC -ECB2 -131S5		8602/3 Button label , Black , Vertical arrow at 90 degrees		R. STAHL
302	1	**223682**		+JOCC -ECB2 -131S5		8602A3-001-S Pushbutton		R. STAHL

Parts list

Row	Counted	{}▲ material	Free issue	▲1 part of	▲2 name	▲3 sales text	part number manufacturer	manufacturer
303	1	**227763**		+JOCC -ECB2 -131S6		8602/3 Button label , Black , Vertical arrow at 90 degrees		R. STAHL
304	1	**223682**		+JOCC -ECB2 -131S6		8602A3-001-S Pushbutton		R. STAHL
305	1	**264000**		+JOCC -ECB2 -131S7		8602A3-732-S-90G-E99 Rotary actuator, small , Not padlockable		R. STAHL
306	1	**261632**		+JOCC -ECB2 -131S7		Adaptor compl. 8602/3 front. f. 8008/2-0		R. STAHL
307	1	**215425**		+JOCC -ECB2 -131S8		8602/3 Button label , Black		R. STAHL
308	1	**223682**		+JOCC -ECB2 -131S8		8602A3-001-S Pushbutton		R. STAHL
309	1	**215425**		+JOCC -ECB2 -132S1		8602/3 Button label , Black		R. STAHL
310	1	**223682**		+JOCC -ECB2 -132S1		8602A3-001-S Pushbutton		R. STAHL
311	1	**215425**		+JOCC -ECB2 -132S2		8602/3 Button label , Black		R. STAHL
312	1	**223682**		+JOCC -ECB2 -132S2		8602A3-001-S Pushbutton		R. STAHL
313	1	**215425**		+JOCC -ECB2 -132S3		8602/3 Button label , Black		R. STAHL
314	1	**223682**		+JOCC -ECB2 -132S3		8602A3-001-S Pushbutton		R. STAHL
315	1	**215425**		+JOCC -ECB2 -132S4		8602/3 Button label , Black		R. STAHL
316	1	**223682**		+JOCC -ECB2 -132S4		8602A3-001-S Pushbutton		R. STAHL
317	1	**244663**		+JOCC -ECB2 -132S5		8602A3-008-S-M01-02-MS01 Key-operated switch actuator , MS1		R. STAHL
318	1	**223682**		+JOCC -ECB2 -132S6		8602A3-001-S Pushbutton		R. STAHL
319	1	**308469**		+JOCC -ECB2 -132S6		Button label 8602/3-bk0126-D-1		R. STAHL
320	1	**223682**		+JOCC -ECB2 -132S7		8602A3-001-S Pushbutton		R. STAHL
321	1	**308470**		+JOCC -ECB2 -132S7		Button label 8602/3-bk0127-D-2		R. STAHL
322	1	**223682**		+JOCC -ECB2 -132S8		8602A3-001-S Pushbutton		R. STAHL
323	1	**308471**		+JOCC -ECB2 -132S8		Button label 8602/3-bk0128-D-3		R. STAHL
324	1	**264000**		+JOCC -ECB2 -133S2		8602A3-732-S-90G-E99 Rotary actuator, small , Not padlockable		R. STAHL
325	1	**261632**		+JOCC -ECB2 -133S2		Adaptor compl. 8602/3 front. f. 8008/2-0		R. STAHL
326	1	**215425**		+JOCC -ECB2 -133S4		8602/3 Button label , Black		R. STAHL
327	1	**223682**		+JOCC -ECB2 -133S4		8602A3-001-S Pushbutton		R. STAHL
328	1	**223688**		+JOCC -ECB2 -160S1		8602A3-010-S Mushroom stay-put button , EM-STOP		R. STAHL
329	1	**244868**		+JOCC -ECB2 -160S1		8602A3-758 , Silicone-free Locking device, not actuated , Mushroom stay-put b…		R. STAHL
330	2	**110865**		+JOCC -ECB2 -A20		Nut M20x1,5 Ms nickel plated	10063143	WISKA
331	1	**112591**		+JOCC -ECB2 -X4		Cover D-ST 2,5	3030417	PHOENIX
332	1	**112928**		+JOCC -ECB2 -X4		Fixed jumper FBS 2-5	3030161	PHOENIX
333	2	**112434**		+JOCC -ECB2 -X4		end bracket CLIPFIX 35	3022218	PHOENIX
334	4	**219442**		+JOCC -ECB2 -X4	1...4	PT 2,5 Terminal block , Grey	3209510	PHOENIX
335	4	**257740**		+JOCC -ECB2 -X4	PE	PT 2,5-PE Protective conductor terminal , Green-yellow	3209536	PHOENIX
336	1	**112591**		+JOCC -ECB2 -XCP3		Cover D-ST 2,5	3030417	PHOENIX
337	2	**112434**		+JOCC -ECB2 -XCP3		end bracket CLIPFIX 35	3022218	PHOENIX
338	48	**219442**		+JOCC -ECB2 -XCP3	1...48	PT 2,5 Terminal block , Grey	3209510	PHOENIX
339	1	**275289**		+JOCC -ETB1		8150/5-E-0730-0360-330-3311 Conn.chamber		R. STAHL
340	1	**200886**		+JOCC -ETB1		8150A0074-352-251-10-E-F110 Frame		R. STAHL
341	1	**200890**		+JOCC -ETB1		8150A0074-680-251-10-D-F120 Frame		R. STAHL

Parts list

Row	Counted	{}▲ material	Free issue	▲1 part of	▲2 name	▲3 sales text	part number manufacturer	manufacturer
342	1	**143522**		+JOCC -ETB1		8290/3-M20 Stopping plug M20 , Polyamide		R. STAHL
343	2	**143524**		+JOCC -ETB1		8290/3-M25 Stopping plug M25 , Polyamide		R. STAHL
344	2	**143534**		+JOCC -ETB1		8290/3-M32 Stopping plug M32 , Polyamide		R. STAHL
345	4	**254344**		+JOCC -ETB1		Ground support 8150 H=65mm, L=280mm CC		R. STAHL
346	1	**110865**		+JOCC -ETB1		Nut M20x1,5 Ms nickel plated		WISKA
347	2	**110867**		+JOCC -ETB1		Nut M25x1,5 Ms nickel plated		WISKA
348	2	**110869**		+JOCC -ETB1		Nut M32x1,5 Ms nickel plated		WISKA
349	4	**254346**		+JOCC -ETB1		Rail support 8150 H=84mm, L=98mm CC		R. STAHL
350	2	**202827**		+JOCC -ETB1		mounting rail TS35 in enclosure 8150 for terminals length: 708mm		R. STAHL
351	1	**169492**		+JOCC -ETB1	-75S0	8006/4-003-00 Load and motor switch , 4 P , 4 NO		R. STAHL
352	1	**169497**		+JOCC -ETB1	-75S7	8006/4-007-00 Load/motor switch , 2 P , 2 NO		R. STAHL
353	1	**229920**		+JOCC -ETB1	-A000	8161/7-M40-2812 Cable gland M40 12 ... 28 mm Unarmoured cable types , Poly…		R. STAHL
354	3	**229919**		+JOCC -ETB1	-A001 -A016 -A017	8161/7-M32-2109 Cable gland M32 9 ... 21 mm Unarmoured cable types , Polya…		R. STAHL
355	1	**229917**		+JOCC -ETB1	-A018	8161/7-M20-1304 Cable gland M20 4 ... 13 mm Unarmoured cable types , Polya…		R. STAHL
356	2	**229920**		+JOCC -ETB1	-A019 -A101	8161/7-M40-2812 Cable gland M40 12 ... 28 mm Unarmoured cable types , Poly…		R. STAHL
357	1	**229919**		+JOCC -ETB1	-A104	8161/7-M32-2109 Cable gland M32 9 ... 21 mm Unarmoured cable types , Polya…		R. STAHL
358	1	**229920**		+JOCC -ETB1	-A201	8161/7-M40-2812 Cable gland M40 12 ... 28 mm Unarmoured cable types , Poly…		R. STAHL
359	1	**229919**		+JOCC -ETB1	-A204	8161/7-M32-2109 Cable gland M32 9 ... 21 mm Unarmoured cable types , Polya…		R. STAHL
360	2	**136640**		+JOCC -ETB1	-PE-RAIL 1 -PE-RAIL-2	Earthing rail , 18x4 mm2 copper Uncoated , 8146		R. STAHL
361	1	**282336**		+JOCC -ETB1 -75S0		8602A3-736-S-90I-E02 Rotary handle, maxi , Black -Black		R. STAHL
362	1	**274882**		+JOCC -ETB1 -75S0		Label 8602/3 Ø58,5 mm 0/OFF I/ON , f.a.736,737		R. STAHL
363	1	**282336**		+JOCC -ETB1 -75S7		8602A3-736-S-90I-E02 Rotary handle, maxi , Black -Black		R. STAHL
364	1	**274882**		+JOCC -ETB1 -75S7		Label 8602/3 Ø58,5 mm 0/OFF I/ON , f.a.736,737		R. STAHL
365	1	**110871**		+JOCC -ETB1 -A000		Nut M40x1,5 Ms nickel plated	10063146	WISKA
366	3	**110869**		+JOCC -ETB1 -A001 +JOCC -ETB1 -A016 +JOCC -ETB1 -A017		Nut M32x1,5 Ms nickel plated		WISKA
367	1	**110865**		+JOCC -ETB1 -A018		Nut M20x1,5 Ms nickel plated	10063143	WISKA
368	2	**110871**		+JOCC -ETB1 -A019 +JOCC -ETB1 -A101		Nut M40x1,5 Ms nickel plated	10063146	WISKA
369	1	**110869**		+JOCC -ETB1 -A104		Nut M32x1,5 Ms nickel plated		WISKA
370	1	**110871**		+JOCC -ETB1 -A201		Nut M40x1,5 Ms nickel plated	10063146	WISKA
371	1	**110869**		+JOCC -ETB1 -A204		Nut M32x1,5 Ms nickel plated		WISKA
372	2	**110928**		+JOCC -ETB1 -PE-RAIL 1		Pan head screw for conversion kit of 4mm² PE/PA-Rail		R. STAHL
373	1	**148197**		+JOCC -ETB1 -PE-RAIL 1		Plate for conversion kit of 4mm² PE/PA-Rail		R. STAHL

Parts list

Row	Counted	{}▲ material	Free issue	▲1 part of	▲2 name	▲3 sales text	part number manufacturer	manufacturer
374	2	**110928**		+JOCC -ETB1 -PE-RAIL-2		Pan head screw for conversion kit of 4mm² PE/PA-Rail		R. STAHL
375	1	**148197**		+JOCC -ETB1 -PE-RAIL-2		Plate for conversion kit of 4mm² PE/PA-Rail		R. STAHL
376	1	**112591**		+JOCC -ETB1 -X6		Cover D-ST 2,5	3030417	PHOENIX
377	1	**112434**		+JOCC -ETB1 -X6		end bracket CLIPFIX 35	3022218	PHOENIX
378	16	**219442**		+JOCC -ETB1 -X6	1...16	PT 2,5 Terminal block , Grey	3209510	PHOENIX
379	1	**261022**		+JOCC -ETB1 -X000		End plate D-PT 16 Width : 2,200 mm, Grey	3212060	PHOENIX
380	1	**112434**		+JOCC -ETB1 -X000		end bracket CLIPFIX 35	3022218	PHOENIX
381	3	**261019**		+JOCC -ETB1 -X000	1...3	PT 16 N Terminal block , Grey	3212138	PHOENIX
382	1	**261021**		+JOCC -ETB1 -X000	PE	PT 16 N-PE Protective conductor terminal , Green-yellow	3212147	PHOENIX
383	1	**257782**		+JOCC -ETB1 -X001		End plate D-PT 6 Width : 2.200 mm, Grey	3212044	PHOENIX
384	1	**112434**		+JOCC -ETB1 -X001		end bracket CLIPFIX 35	3022218	PHOENIX
385	2	**257770**		+JOCC -ETB1 -X001	1 2	PT 6 Terminal block , Grey	3211813	PHOENIX
386	1	**257772**		+JOCC -ETB1 -X001	PE	PT 6-PE Protective conductor terminal , Green-yellow	3211822	PHOENIX
387	1	**257782**		+JOCC -ETB1 -X016		End plate D-PT 6 Width : 2.200 mm, Grey	3212044	PHOENIX
388	1	**112434**		+JOCC -ETB1 -X016		end bracket CLIPFIX 35	3022218	PHOENIX
389	3	**257770**		+JOCC -ETB1 -X016	1...3	PT 6 Terminal block , Grey	3211813	PHOENIX
390	1	**257772**		+JOCC -ETB1 -X016	PE	PT 6-PE Protective conductor terminal , Green-yellow	3211822	PHOENIX
391	1	**257782**		+JOCC -ETB1 -X017		End plate D-PT 6 Width : 2.200 mm, Grey	3212044	PHOENIX
392	1	**112434**		+JOCC -ETB1 -X017		end bracket CLIPFIX 35	3022218	PHOENIX
393	3	**257770**		+JOCC -ETB1 -X017	1...3	PT 6 Terminal block , Grey	3211813	PHOENIX
394	1	**257772**		+JOCC -ETB1 -X017	PE	PT 6-PE Protective conductor terminal , Green-yellow	3211822	PHOENIX
395	1	**112591**		+JOCC -ETB1 -X018		Cover D-ST 2,5	3030417	PHOENIX
396	1	**113066**		+JOCC -ETB1 -X018		Jumper FBS 3-5	3030174	PHOENIX
397	1	**112434**		+JOCC -ETB1 -X018		end bracket CLIPFIX 35	3022218	PHOENIX
398	4	**219442**		+JOCC -ETB1 -X018	1...4	PT 2,5 Terminal block , Grey	3209510	PHOENIX
399	1	**112591**		+JOCC -ETB1 -X019		End plate D-ST 2,5 Width : 2,200 mm, Grey	3030417	PHOENIX
400	1	**112434**		+JOCC -ETB1 -X019		end bracket CLIPFIX 35	3022218	PHOENIX
401	24	**219442**		+JOCC -ETB1 -X019	1...24	PT 2,5 Terminal block , Grey	3209510	PHOENIX
402	1	**112591**		+JOCC -ETB1 -XERC		Cover D-ST 2,5	3030417	PHOENIX
403	1	**113066**		+JOCC -ETB1 -XERC		Jumper FBS 3-5	3030174	PHOENIX
404	1	**112434**		+JOCC -ETB1 -XERC		end bracket CLIPFIX 35	3022218	PHOENIX
405	4	**219442**		+JOCC -ETB1 -XERC	1...4	PT 2,5 Terminal block , Grey	3209510	PHOENIX
406	1	**112591**		+JOCC -ETB1 -XLA1		Cover D-ST 2,5	3030417	PHOENIX
407	3	**112928**		+JOCC -ETB1 -XLA1		Fixed jumper FBS 2-5	3030161	PHOENIX
408	1	**113068**		+JOCC -ETB1 -XLA1		Jumper FBS 5-5	3030190	PHOENIX
409	1	**112434**		+JOCC -ETB1 -XLA1		end bracket CLIPFIX 35	3022218	PHOENIX
410	24	**219442**		+JOCC -ETB1 -XLA1	1...24	PT 2,5 Terminal block , Grey	3209510	PHOENIX

Parts list

Row	Counted	{}▲ material	Free issue	▲1 part of	▲2 name	▲3 sales text	part number manufacturer	manufacturer
411	1	**112591**		+JOCC -ETB1 -XLA2		Cover D-ST 2,5	3030417	PHOENIX
412	3	**112928**		+JOCC -ETB1 -XLA2		Fixed jumper FBS 2-5	3030161	PHOENIX
413	1	**113068**		+JOCC -ETB1 -XLA2		Jumper FBS 5-5	3030190	PHOENIX
414	1	**112434**		+JOCC -ETB1 -XLA2		end bracket CLIPFIX 35	3022218	PHOENIX
415	24	**219442**		+JOCC -ETB1 -XLA2	1...24	PT 2,5 Terminal block , Grey	3209510	PHOENIX
416	1	**112591**		+JOCC -ETB1 -XYLA1		Cover D-ST 2,5	3030417	PHOENIX
417	1	**113068**		+JOCC -ETB1 -XYLA1		Jumper FBS 5-5	3030190	PHOENIX
418	2	**112434**		+JOCC -ETB1 -XYLA1		end bracket CLIPFIX 35	3022218	PHOENIX
419	11	**219442**		+JOCC -ETB1 -XYLA1	1...11	PT 2,5 Terminal block , Grey	3209510	PHOENIX
420	1	**112591**		+JOCC -ETB1 -XYLA2		Cover D-ST 2,5	3030417	PHOENIX
421	1	**113068**		+JOCC -ETB1 -XYLA2		Jumper FBS 5-5	3030190	PHOENIX
422	2	**112434**		+JOCC -ETB1 -XYLA2		end bracket CLIPFIX 35	3022218	PHOENIX
423	11	**219442**		+JOCC -ETB1 -XYLA2	1...11	PT 2,5 Terminal block , Grey	3209510	PHOENIX
424	1	**112591**		+JOCC -ETB1 -Xcom		Cover D-ST 2,5	3030417	PHOENIX
425	2	**112434**		+JOCC -ETB1 -Xcom		end bracket CLIPFIX 35	3022218	PHOENIX
426	4	**219442**		+JOCC -ETB1 -Xcom	1...4	PT 2,5 Terminal block , Grey	3209510	PHOENIX
427	1	**275289**		+JOCC -ETB2		8150/5-E-0730-0360-330-3311 Conn.chamber		R. STAHL
428	1	**200886**		+JOCC -ETB2		8150A0074-352-251-10-E-F110 Frame		R. STAHL
429	1	**200890**		+JOCC -ETB2		8150A0074-680-251-10-D-F120 Frame		R. STAHL
430	4	**254344**		+JOCC -ETB2		Ground support 8150 H=65mm, L=280mm CC		R. STAHL
431	4	**254346**		+JOCC -ETB2		Rail support 8150 H=84mm, L=98mm CC		R. STAHL
432	2	**202827**		+JOCC -ETB2		mounting rail TS35 in enclosure 8150 for terminals length: 708mm		R. STAHL
433	1	**229956**		+JOCC -ETB2	-A014	8161/8-M25-1707 , 7 ... 17 mm Cable gland M25 , Polyamide Blue		R. STAHL
434	1	**229955**		+JOCC -ETB2	-A015	8161/8-M20-1304 , 4 ... 13 mm Cable gland M20 , Polyamide Blue		R. STAHL
435	1	**229956**		+JOCC -ETB2	-A102-1	8161/8-M25-1707 , 7 ... 17 mm Cable gland M25 , Polyamide Blue		R. STAHL
436	1	**229957**		+JOCC -ETB2	-A102-2	8161/8-M32-2109 Cable gland M32 9 ... 21 mm Unarmoured cable types , Polya…		R. STAHL
437	2	**229956**		+JOCC -ETB2	-A103 -A202-1	8161/8-M25-1707 , 7 ... 17 mm Cable gland M25 , Polyamide Blue		R. STAHL
438	1	**229957**		+JOCC -ETB2	-A202-2	8161/8-M32-2109 Cable gland M32 9 ... 21 mm Unarmoured cable types , Polya…		R. STAHL
439	1	**229956**		+JOCC -ETB2	-A203	8161/8-M25-1707 , 7 ... 17 mm Cable gland M25 , Polyamide Blue		R. STAHL
440	2	**136622**		+JOCC -ETB2	-TE-RAIL 1 -TE-RAIL 2	Neutral conductor bar , 18x4 mm2 copper Uncoated , 8146		R. STAHL
441	1	**110867**		+JOCC -ETB2 -A014		Nut M25x1,5 Ms nickel plated	10063144	WISKA
442	1	**110865**		+JOCC -ETB2 -A015		Nut M20x1,5 Ms nickel plated	10063143	WISKA
443	1	**110867**		+JOCC -ETB2 -A102-1		Nut M25x1,5 Ms nickel plated	10063144	WISKA
444	1	**110869**		+JOCC -ETB2 -A102-2		Nut M32x1,5 Ms nickel plated		WISKA
445	2	**110867**		+JOCC -ETB2 -A103 +JOCC -ETB2 -A202-1		Nut M25x1,5 Ms nickel plated	10063144	WISKA
446	1	**110869**		+JOCC -ETB2 -A202-2		Nut M32x1,5 Ms nickel plated		WISKA
447	1	**110867**		+JOCC -ETB2 -A203		Nut M25x1,5 Ms nickel plated	10063144	WISKA

Parts list

Row	Counted	{}▲ material	Free issue	▲1 part of	▲2 name	▲3 sales text	part number manufacturer	manufacturer
448	1	**112591**		+JOCC -ETB2 -Xi14		Cover D-ST 2,5	3030417	PHOENIX
449	2	**112434**		+JOCC -ETB2 -Xi14		end bracket CLIPFIX 35	3022218	PHOENIX
450	18	**257739**		+JOCC -ETB2 -Xi14	1...18	PT 2,5 BU Terminal block , Blue	3209523	PHOENIX
451	1	**112591**		+JOCC -ETB2 -Xi15		Cover D-ST 2,5	3030417	PHOENIX
452	2	**112434**		+JOCC -ETB2 -Xi15		end bracket CLIPFIX 35	3022218	PHOENIX
453	8	**257739**		+JOCC -ETB2 -Xi15	1...8	PT 2,5 BU Terminal block , Blue	3209523	PHOENIX
454	1	**112591**		+JOCC -ETB2 -XiLA1		Cover D-ST 2,5	3030417	PHOENIX
455	2	**112434**		+JOCC -ETB2 -XiLA1		end bracket CLIPFIX 35	3022218	PHOENIX
456	56	**257739**		+JOCC -ETB2 -XiLA1	1...56	PT 2,5 BU Terminal block , Blue	3209523	PHOENIX
457	1	**112591**		+JOCC -ETB2 -XiLA2		Cover D-ST 2,5	3030417	PHOENIX
458	2	**112434**		+JOCC -ETB2 -XiLA2		end bracket CLIPFIX 35	3022218	PHOENIX
459	56	**257739**		+JOCC -ETB2 -XiLA2	1...56	PT 2,5 BU Terminal block , Blue	3209523	PHOENIX
460	1	**112591**		+JOCC -ETB2 -XiYLA1		Cover D-ST 2,5	3030417	PHOENIX
461	2	**112434**		+JOCC -ETB2 -XiYLA1		end bracket CLIPFIX 35	3022218	PHOENIX
462	18	**257739**		+JOCC -ETB2 -XiYLA1	1...18	PT 2,5 BU Terminal block , Blue	3209523	PHOENIX
463	1	**112591**		+JOCC -ETB2 -XiYLA2		Cover D-ST 2,5	3030417	PHOENIX
464	2	**112434**		+JOCC -ETB2 -XiYLA2		end bracket CLIPFIX 35	3022218	PHOENIX
465	18	**257739**		+JOCC -ETB2 -XiYLA2	1...18	PT 2,5 BU Terminal block , Blue	3209523	PHOENIX
466	4	**297352**		+JOCC -W011 +JOCC -W012		Cable KVCY 3X0,75 mm2 PVC GY		

2	Final as built	19-3-2025	M.Besseling	Drawn:	31-10-2024	elshofjo	**KANON LOADING EQUIPMENT B.V.**		**Electromach BV** Jan Tinbergenstraat 193 7559 SP Hengelo The Netherlands	Parts list +JOCC	Int. Revision :	P242068A91
2	For approval	13-11-2024	besselingmi	Engineer:	19-9-2024	besselingmi					Drawing No.:	+JOCC
2				Approved:			Ref: P242068, B242352	Quote:			2011280786-001000-24	Scale: 1 mm : 1 mm / A3
Index	Revision	Date	name	Changed:			Order: 2011280786	Item: 001000	www.kanon.nl		Refer to protection notice ISO 16016	Sheet: 40 page 16 / 16

List of nameplates

Part of	Text 1	Text 2	Text 3	Material	Width	Height	Fixing	Char. Height	Backgr. Color	Letter Color
+JOCC -DCB1 -77X1	115VAC - 50Hz	max. 200VA		plastic	40,00 mm	15,00 mm	pasted	3 mm	White	Black
+JOCC -ECB1	MLA-A			plastic	222,00 mm	20,00 mm	screwed	5 mm	White	Black
+JOCC -ECB1	MLA-B			plastic	222,00 mm	20,00 mm	screwed	5 mm	White	Black
+JOCC -ECB1 -104P1	ARM	IN ALARM		plastic	55,00 mm	20,00 mm	screwed	3 mm	White	Black
+JOCC -ECB1 -104P2	MANUAL	ERC ALARM		plastic	55,00 mm	20,00 mm	screwed	3 mm	White	Black
+JOCC -ECB1 -104P3	FREEWHEEL			plastic	55,00 mm	20,00 mm	screwed	3 mm	White	Black
+JOCC -ECB1 -104P4	MANOEUVRING			plastic	55,00 mm	20,00 mm	screwed	3 mm	White	Black
+JOCC -ECB1 -104P5	ERC	ARMED		plastic	55,00 mm	20,00 mm	screwed	3 mm	White	Black
+JOCC -ECB1 -104P6	ERC	DISARMED		plastic	55,00 mm	20,00 mm	screwed	3 mm	White	Black
+JOCC -ECB1 -104P7	VESSEL	CONNECTED		plastic	55,00 mm	20,00 mm	screwed	3 mm	White	Black
+JOCC -ECB1 -104P8	VESSEL	DISCONNECTED		plastic	55,00 mm	20,00 mm	screwed	3 mm	White	Black
+JOCC -ECB1 -105P1	ARM	LOCKED		plastic	55,00 mm	20,00 mm	screwed	3 mm	White	Black
+JOCC -ECB1 -105P2	ERC VALVES	OPENED		plastic	55,00 mm	20,00 mm	screwed	3 mm	White	Black
+JOCC -ECB1 -105P3	ERC VALVES	CLOSED		plastic	55,00 mm	20,00 mm	screwed	3 mm	White	Black
+JOCC -ECB1 -105P4	ERC	AVAILABLE		plastic	55,00 mm	20,00 mm	screwed	3 mm	White	Black
+JOCC -ECB1 -105P5	ERC SOLENOID	TEST NEEDED		plastic	55,00 mm	20,00 mm	screwed	3 mm	White	Black
+JOCC -ECB1 -108P1	ARM	IN ALARM		plastic	55,00 mm	20,00 mm	screwed	3 mm	White	Black
+JOCC -ECB1 -108P2	MANUAL	ERC ALARM		plastic	55,00 mm	20,00 mm	screwed	3 mm	White	Black
+JOCC -ECB1 -108P3	FREEWHEEL			plastic	55,00 mm	20,00 mm	screwed	3 mm	White	Black
+JOCC -ECB1 -108P4	MANOEUVRING			plastic	55,00 mm	20,00 mm	screwed	3 mm	White	Black
+JOCC -ECB1 -108P5	ERC	ARMED		plastic	55,00 mm	20,00 mm	screwed	3 mm	White	Black
+JOCC -ECB1 -108P6	ERC	DISARMED		plastic	55,00 mm	20,00 mm	screwed	3 mm	White	Black
+JOCC -ECB1 -108P7	VESSEL	CONNECTED		plastic	55,00 mm	20,00 mm	screwed	3 mm	White	Black
+JOCC -ECB1 -108P8	VESSEL	DISCONNECTED		plastic	55,00 mm	20,00 mm	screwed	3 mm	White	Black
+JOCC -ECB1 -109P1	ARM	LOCKED		plastic	55,00 mm	20,00 mm	screwed	3 mm	White	Black
+JOCC -ECB1 -109P2	ERC VALVES	OPENED		plastic	55,00 mm	20,00 mm	screwed	3 mm	White	Black
+JOCC -ECB1 -109P3	ERC VALVES	CLOSED		plastic	55,00 mm	20,00 mm	screwed	3 mm	White	Black
+JOCC -ECB1 -109P4	ERC	AVAILABLE		plastic	55,00 mm	20,00 mm	screwed	3 mm	White	Black
+JOCC -ECB1 -109P5	ERC SOLENOID	TEST NEEDED		plastic	55,00 mm	20,00 mm	screwed	3 mm	White	Black
+JOCC -ECB1 -SP1				plastic	55,00 mm	20,00 mm	screwed	3 mm	White	Black
+JOCC -ECB1 -SP2				plastic	55,00 mm	20,00 mm	screwed	3 mm	White	Black
+JOCC -ECB1 -SP3				plastic	55,00 mm	20,00 mm	screwed	3 mm	White	Black
+JOCC -ECB1 -SP4				plastic	55,00 mm	20,00 mm	screwed	3 mm	White	Black
+JOCC -ECB1 -SP6				plastic	55,00 mm	20,00 mm	screwed	3 mm	White	Black
+JOCC -ECB1 -SP8				plastic	55,00 mm	20,00 mm	screwed	3 mm	White	Black
+JOCC -ECB2 -101P1	POWER ON			plastic	55,00 mm	20,00 mm	screwed	3 mm	White	Black
+JOCC -ECB2 -101P2	LOW OIL	LEVEL ALARM		plastic	55,00 mm	20,00 mm	screwed	3 mm	White	Black
+JOCC -ECB2 -101P3	LOW OIL	PRESS. ALARM		plastic	55,00 mm	20,00 mm	screwed	3 mm	White	Black
+JOCC -ECB2 -101P4	COMMON FUSE	ALARM		plastic	55,00 mm	20,00 mm	screwed	3 mm	White	Black
+JOCC -ECB2 -101P5	ARM IN MNVR.	ERC ARMED		plastic	55,00 mm	20,00 mm	screwed	3 mm	White	Black

Index	Revision	Date	name			
2	Final as built	19-3-2025	M.Besseling	Drawn:	31-10-2024	elshofjo
2	For approval	13-11-2024	besselingmi	Engineer:	19-9-2024	besselingmi
2				Approved:		
				Changed:		

KANON LOADING EQUIPMENT B.V.

Ref: P242068, B242352 Quote:
Order: 2011280786 Item: 001000

KANON LOADING EQUIPMENT
www.kanon.nl

Electromach BV
Jan Tinbergenstraat 193
7559 SP Hengelo
The Netherlands

List of nameplates
+JOCC

Int. Revision :	P242068A91
Drawing No.: 2011280786-001000-24	+JOCC
Refer to protection notice ISO 16016	Scale: 1 mm : 1 mm / A3
	Sheet: 41 page 1 / 2

List of nameplates

Part of	Text 1	Text 2	Text 3	Material	Width	Height	Fixing	Char. Height	Backgr. Color	Letter Color
+JOCC -ECB2 -101P6	SOLENOID FEEDBACK	FAILURE		plastic	55,00 mm	20,00 mm	screwed	3 mm	White	Black
+JOCC -ECB2 -101P8	ERC SOLENOID	TEST ACTIVATED		plastic	55,00 mm	20,00 mm	screwed	3 mm	White	Black
+JOCC -ECB2 -102P1	ERC TEST	FAILURE		plastic	55,00 mm	20,00 mm	screwed	3 mm	White	Black
+JOCC -ECB2 -130S1	POWER	OFF / ON		plastic	55,00 mm	20,00 mm	screwed	3 mm	White	Black
+JOCC -ECB2 -130S2	LAMP	TEST		plastic	55,00 mm	20,00 mm	screwed	3 mm	White	Black
+JOCC -ECB2 -130S3	ALARM	ACKNOWLEDGE		plastic	55,00 mm	20,00 mm	screwed	3 mm	White	Black
+JOCC -ECB2 -130S5	CONTROL	LOC. / PEN. / RAD.		plastic	55,00 mm	20,00 mm	screwed	3 mm	White	Black
+JOCC -ECB2 -130S7	PUMP SELECTION	1 / 2		plastic	55,00 mm	20,00 mm	screwed	3 mm	White	Black
+JOCC -ECB2 -131S1	UP			plastic	55,00 mm	20,00 mm	screwed	5 mm	White	Black
+JOCC -ECB2 -131S2	DOWN			plastic	55,00 mm	20,00 mm	screwed	5 mm	White	Black
+JOCC -ECB2 -131S3	SHORE			plastic	55,00 mm	20,00 mm	screwed	5 mm	White	Black
+JOCC -ECB2 -131S4	SHIP			plastic	55,00 mm	20,00 mm	screwed	5 mm	White	Black
+JOCC -ECB2 -131S5	RIGHT			plastic	55,00 mm	20,00 mm	screwed	5 mm	White	Black
+JOCC -ECB2 -131S6	LEFT			plastic	55,00 mm	20,00 mm	screwed	5 mm	White	Black
+JOCC -ECB2 -131S7	SLOW / FAST			plastic	55,00 mm	20,00 mm	screwed	3 mm	White	Black
+JOCC -ECB2 -131S8	FREEWHEEL			plastic	55,00 mm	20,00 mm	screwed	3 mm	White	Black
+JOCC -ECB2 -132S1	COUPLER	OPEN		plastic	55,00 mm	20,00 mm	screwed	3 mm	White	Black
+JOCC -ECB2 -132S2	COUPLER	CLOSE		plastic	55,00 mm	20,00 mm	screwed	3 mm	White	Black
+JOCC -ECB2 -132S3	ERC VALVES	OPEN		plastic	55,00 mm	20,00 mm	screwed	3 mm	White	Black
+JOCC -ECB2 -132S4	ERC VALVES	CLOSE		plastic	55,00 mm	20,00 mm	screwed	3 mm	White	Black
+JOCC -ECB2 -132S5	TEST	OVERRIDE		plastic	55,00 mm	20,00 mm	screwed	3 mm	White	Black
+JOCC -ECB2 -132S6	RESET	ERC ALARM		plastic	55,00 mm	20,00 mm	screwed	3 mm	White	Black
+JOCC -ECB2 -132S7	RESET	PRE ALARM		plastic	55,00 mm	20,00 mm	screwed	3 mm	White	Black
+JOCC -ECB2 -132S8	POWER	RESET		plastic	55,00 mm	20,00 mm	screwed	3 mm	White	Black
+JOCC -ECB2 -133S2	MLA SELECTION	A / B		plastic	55,00 mm	20,00 mm	screwed	3 mm	White	Black
+JOCC -ECB2 -133S4	START	ERC TEST		plastic	55,00 mm	20,00 mm	screwed	3 mm	White	Black
+JOCC -ECB2 -160S1	MANUAL	ERC RELEASE		plastic	55,00 mm	20,00 mm	screwed	3 mm	White	Black
+JOCC -ECB2 -SP1				plastic	55,00 mm	20,00 mm	screwed	3 mm	White	Black
+JOCC -ECB2 -SP2				plastic	55,00 mm	20,00 mm	screwed	3 mm	White	Black
+JOCC -ECB2 -SP3				plastic	55,00 mm	20,00 mm	screwed	3 mm	White	Black
+JOCC -ECB2 -SP4				plastic	55,00 mm	20,00 mm	screwed	3 mm	White	Black
+JOCC -ECB2 -SP6				plastic	55,00 mm	20,00 mm	screwed	3 mm	White	Black
+JOCC -ECB2 -SP7				plastic	55,00 mm	20,00 mm	screwed	3 mm	White	Black
+JOCC -ECB2 -SP8				plastic	55,00 mm	20,00 mm	screwed	3 mm	White	Black
+JOCC -ECB2 -SP9				plastic	55,00 mm	20,00 mm	screwed	3 mm	White	Black
+JOCC -ETB1 -75S0	MAIN SWITCH	400VAC - 50Hz		plastic	60,00 mm	20,00 mm	screwed	3 mm	White	Black
+JOCC -ETB1 -75S7	MAIN SWITCH	230VAC - 50Hz		plastic	60,00 mm	20,00 mm	screwed	3 mm	White	Black
+JOCC -ETB2	P242068A91			plastic	100,00 mm	20,00 mm	screwed	10 mm	White	Black

Index	Revision	Date	name
2	Final as built	19-3-2025	M.Besseling
2	For approval	13-11-2024	besselingmi
2			

Drawn: 31-10-2024 elshofjo
Engineer: 19-9-2024 besselingmi
Approved:
Changed:

KANON LOADING EQUIPMENT B.V.

Ref: P242068, B242352 Quote:
Order: 2011280786 Item: 001000

KANON LOADING EQUIPMENT
www.kanon.nl

Electromach BV
Jan Tinbergenstraat 193
7559 SP Hengelo
The Netherlands
US

List of nameplates
+JOCC

Int. Revision :
Drawing No.:
2011280786-001000-24
Refer to protection notice ISO 16016

P242068A91
+JOCC
Scale: 1 mm : 1 mm / A3
Sheet: 41 page 2 / 2

List of warning labels

material	plate	Comment	Text 1	Text 2	Text 3
274882	Label 8602/3 Ø58,5 mm 0/OFF I/ON , f.a.736,737			0/OFF	I/ON
274882	Label 8602/3 Ø58,5 mm 0/OFF I/ON , f.a.736,737			0/OFF	I/ON
204082	Warning label Polyester foil , Orange , Glued 52 mm x 20 , Text colour : Black		WARNUNG! Nicht unter Spannung öffnen.	WARNING! Do not open when energized.	AVERTISSEMENT! Ne pas ouvrir sous tension.

Index	Revision	Date	name			
2	Final as built	19-3-2025	M.Besseling	Drawn:	31-10-2024	elshofjo
2	For approval	13-11-2024	besselingmi	Engineer:	19-9-2024	besselingmi
2				Approved:		
				Changed:		

KANON LOADING EQUIPMENT B.V.

Ref: P242068, B242352 Quote:

Order: 2011280786 Item: 001000

KANON LOADING EQUIPMENT

www.kanon.nl

Electromach BV
Jan Tinbergenstraat 193
7559 SP Hengelo
The Netherlands
US

List of warning labels
+JOCC

Int. Revision :	P242068A91
Drawing No.: 2011280786-001000-24	+JOCC
	Scale: 1 mm : 1 mm / A3
Refer to protection notice ISO 16016	Sheet: 42 page 1 / 1

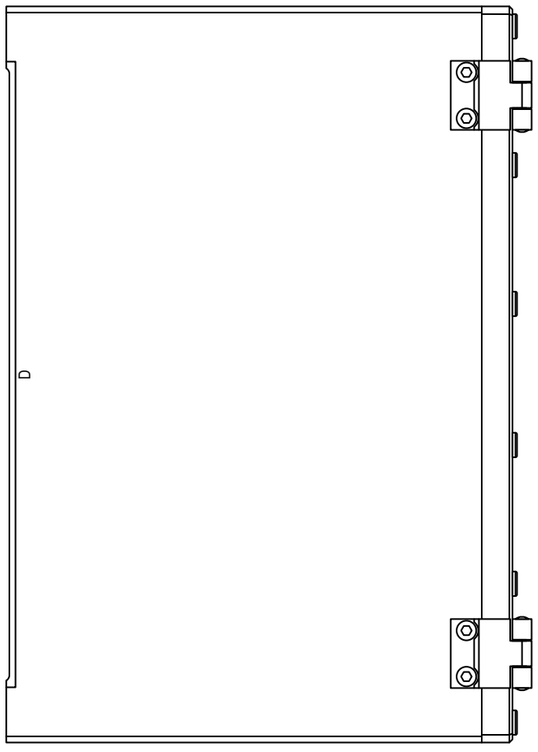

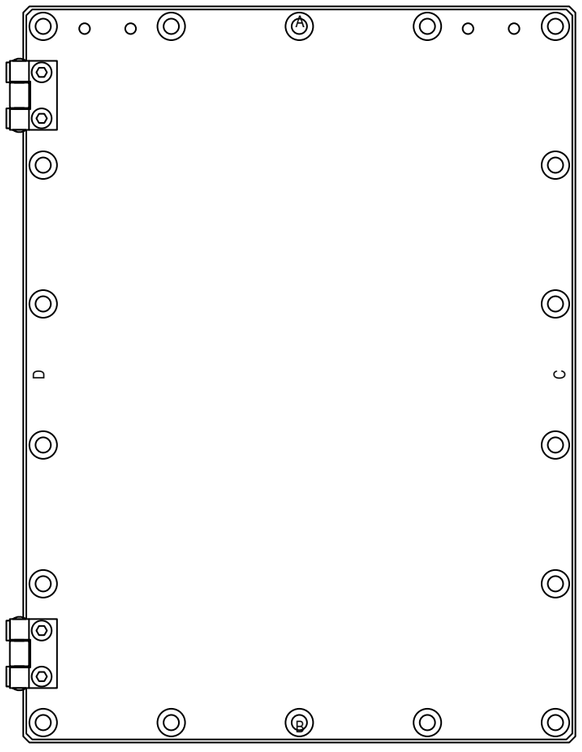

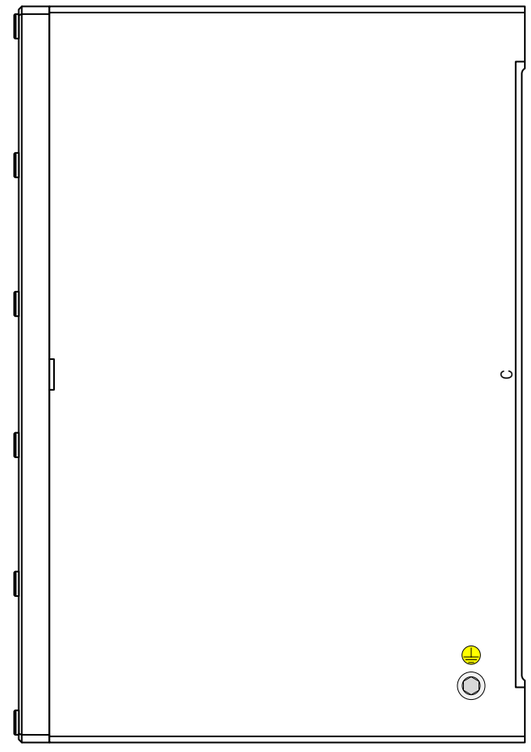

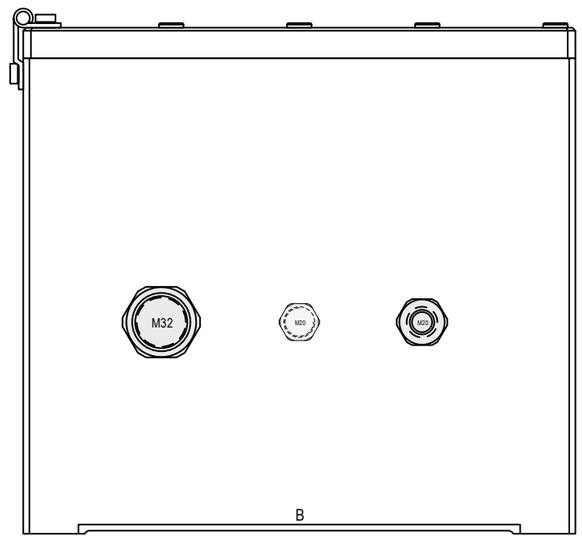

Index	Revision	Date	name			
2	Final as built	19-3-2025	M.Besseling	Drawn:	31-10-2024	elshofjo
1	For approval	13-11-2024	besselingmi	Engineer:	19-9-2024	besselingmi
				Approved:		
				Changed:		

KANON LOADING EQUIPMENT B.V.

Ref: P242068, B242352 Quote:

Order: 2011280786 Item: 001000

KANON LOADING EQUIPMENT

www.kanon.nl

Electromach B.V.
Jan Tinbergenstraat 193
7559 SP Hengelo
The Netherlands
US

Layout
-DRB1 external

Int. Revision :	P242068A91
Drawing No.	+HPP-DRB1
2011280786-001000-24	Scale: 1 mm : 4 mm / A3
Refer to protection notice ISO 16016	Sheet: 45.1

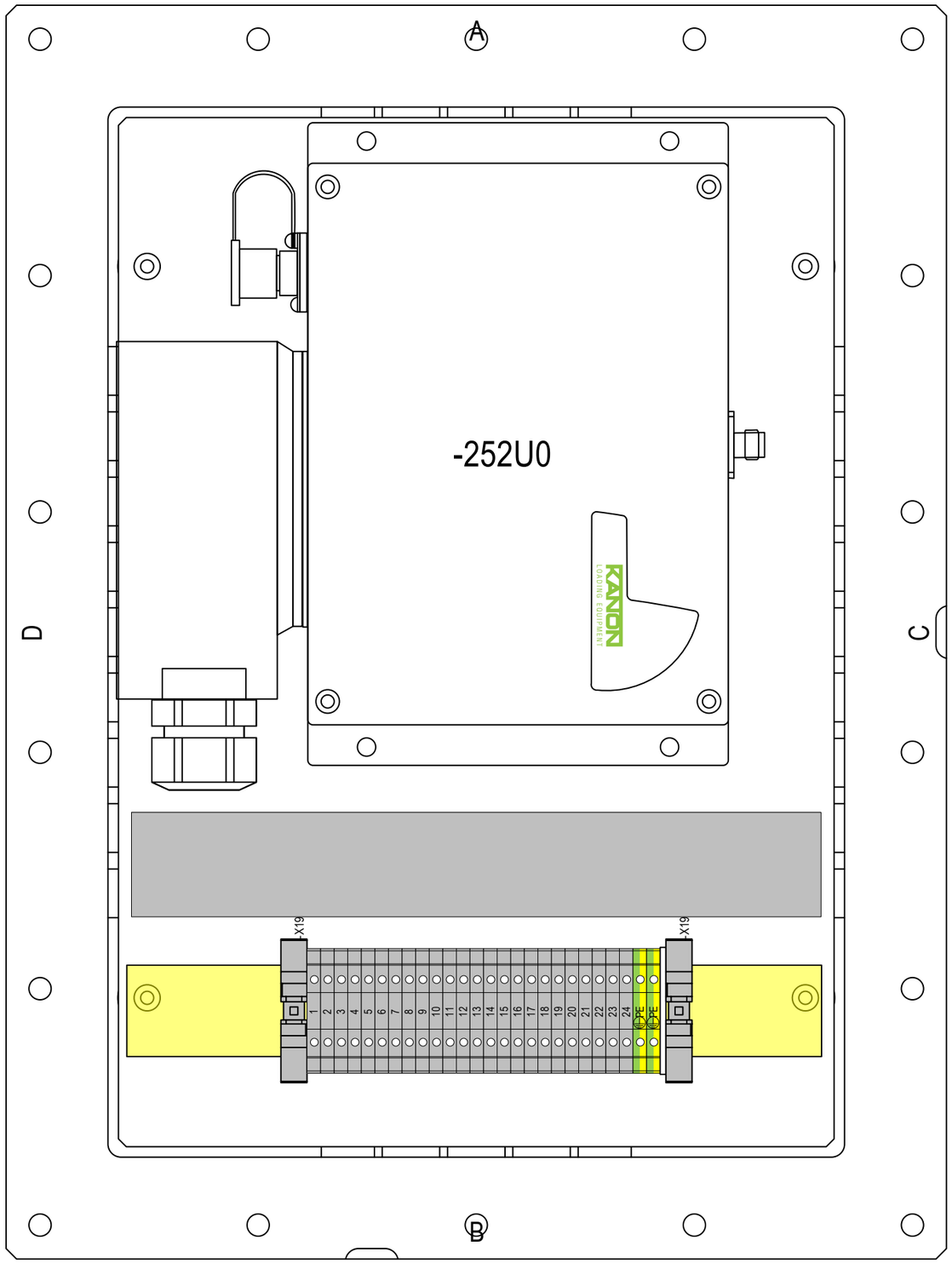

Index	Revision	Date	name								
2	Final as built	19-3-2025	M.Besseling	Drawn:	31-10-2024	elshofjo	**KANON LOADING EQUIPMENT B.V.**		KANON LOADING EQUIPMENT www.kanon.nl	**Electromach B.V.** Jan Tinbergenstraat 193 7559 SP Hengelo The Netherlands US	Layout -DRB1 internal	Int. Revision :	P242068A91
1	For approval	13-11-2024	besselingmi	Engineer:	19-9-2024	besselingmi						Drawing No. 2011280786-001000-24	+HPP-DRB1
				Approved:			Ref: P242068, B242352	Quote:					Scale: 1 mm : 2 mm / A3
				Changed:			Order: 2011280786	Item: 001000				Refer to protection notice ISO 16016	Sheet: 45.2

Parts list

Row	qty.	{}▲ material	Free issue	▲1 part of	▲2 name	▲3 sales text	part number manufacturer	manufacturer
1	1	**279724**		+HPP -DRB1		8264/-325-3..00 Empty enclosure Aluminium		R. STAHL
2	1	**227793**		+HPP -DRB1		8264/.324 -/.325-3..0 mount.equip. -60°C ATEX/IECEx (standard)		R. STAHL
3	1	**143237**		+HPP -DRB1		8264A0240 Earth connection M6 , 10 mm2 , without brass plate		R. STAHL
4	2	**143235**		+HPP -DRB1		cover hinge 8264		R. STAHL
5	1	**246604**		+HPP -DRB1	-A20s16	CMP-20s16PXSS2KREX Cable gland M20 3,1 ... 8,6 mm Unarmoured cable types , Nickel…	20S16PXSS2KREX1RA5	R. STAHL
6	1	**246651**		+HPP -DRB1	-A32	CMP-32PX2KREX Cable gland M32 23,7 ... 33,9 mm All armouring , Nickel-plated brass	32PX2KREX1RA5	R. STAHL
7	1	**111780**		+HPP -DRB1 -A32		CMP-seal white PA M32	32ETS2	CMP
8	1	**253025**		+HPP -DRB1	-SP20	CMP-757-D-M2-5 Stopping plug With hex head , M20 , Nickel-plated brass	757DM25	CMP
9	1	**111778**		+HPP -DRB1 -SP20		CMP-seal white PA M20	20ETS2	CMP
10	1	**112591**		+HPP -DRB1 -X19		End plate D-ST 2,5 Width : 2,200 mm, Grey	3030417	PHOENIX
11	2	**112434**		+HPP -DRB1 -X19		end bracket CLIPFIX 35	3022218	PHOENIX
12	24	**219442**		+HPP -DRB1 -X19	1...24	PT 2,5 Terminal block , Grey	3209510	PHOENIX
13	2	**257740**		+HPP -DRB1 -X19	PE	PT 2,5-PE Protective conductor terminal , Green-yellow	3209536	PHOENIX

Index	Revision	Date	name					
2	Final as built	19-3-2025	M.Besseling	Drawn:	31-10-2024	elshofjo		
2	For approval	13-11-2024	besselingmi	Engineer:	19-9-2024	besselingmi		
2				Approved:				
				Changed:				

KANON LOADING EQUIPMENT B.V.

Ref: P242068, B242352 Quote:

Order: 2011280786 Item: 001000

KANON LOADING EQUIPMENT

www.kanon.nl

Electromach BV
Jan Tinbergenstraat 193
7559 SP Hengelo
The Netherlands
US

Parts list
-DRB1

Int. Revision :	P242068A91
Drawing No.: 2011280786-001000-24	+HPP-DRB1
	Scale: 1 mm : 1 mm / A3
Refer to protection notice ISO 16016	Sheet: 45.3 page 1 / 1

List of nameplates

Part of	Text 1	Text 2	Text 3	Material	Width	Height	Fixing	Char. Height	Backgr. Color	Letter Color

Index	Revision	Date	name			
2	*Final as built*	*19-3-2025*	*M.Besseling*	Drawn:	*31-10-2024*	*elshofjo*
2	*For approval*	*13-11-2024*	*besselingmi*	Engineer:	*19-9-2024*	*besselingmi*
2				Approved:		
Index	Revision	Date	name	Changed:		

KANON LOADING EQUIPMENT B.V.

Ref: *P242068, B242352* Quote:

Order: *2011280786* Item: *001000*

KANON LOADING EQUIPMENT

www.kanon.nl

Electromach BV
Jan Tinbergenstraat 193
7559 SP Hengelo
The Netherlands

List of nameplates
-DRB1

Int. Revision :	*P242068A91*
Drawing No.:	*+HPP-DRB1*
2011280786-001000-24	Scale: *1 mm : 1 mm / A3*
Refer to protection notice ISO 16016	Sheet: *45.4* page *1 / 1*

List of warning labels

material	plate	Comment	Text 1	Text 2	Text 3
204082	Warning label Polyester foil , Orange , Glued 52 mm x 20 , Text colour : Black		WARNUNG! Nicht unter Spannung öffnen.	WARNING! Do not open when energized.	AVERTISSEMENT! Ne pas ouvrir sous tension.

Index	Revision	Date	name			
2	Final as built	19-3-2025	M.Besseling	Drawn:	31-10-2024	elshofjo
2	For approval	13-11-2024	besselingmi	Engineer:	19-9-2024	besselingmi
2				Approved:		
				Changed:		

KANON LOADING EQUIPMENT B.V.

Ref: P242068, B242352 Quote:

Order: 2011280786 Item: 001000

KANON LOADING EQUIPMENT

www.kanon.nl

Electromach BV
Jan Tinbergenstraat 193
7559 SP Hengelo
The Netherlands
US

List of warning labels
-DRB1

Int. Revision : P242068A91

Drawing No.: 2011280786-001000-24 +HPP-DRB1

Scale: 1 mm : 1 mm / A3

Refer to protection notice ISO 16016

Sheet: 45.5 page 1 / 1

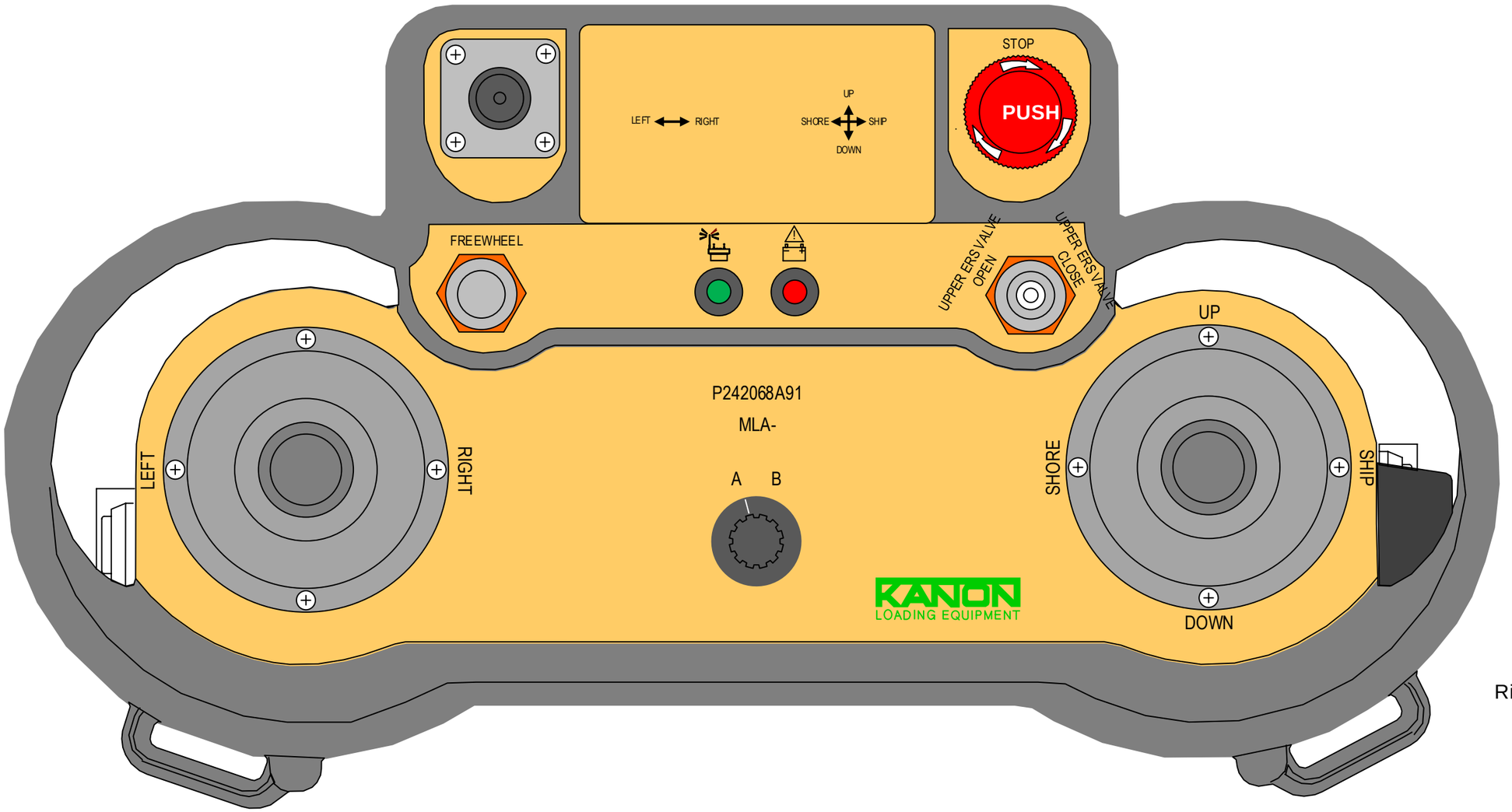

COUPLER

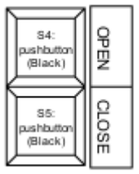

Left side view

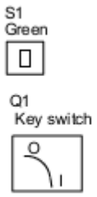

Right side view

Qty	: 1x
Approx. weight	: 2,5 kg
Ex type	: ATEX
Ex classification	: Ex ia IIC T4 Gb
IP rating	: IP65
Radio frequency	: 434.400 Mhz
Country of destination	: Egypt

Two speed control integrated in all joystick directions.
First step is slow, second step is fast operation.
Client to verify the radio frequency will not interfere with Plant Radio Communication and is compliant with the local radio communication rules.

Index	Revision	Date	name

Drawn:	31-10-2024	elshofjo
Engineer:	19-9-2024	besselingmi
Approved:		
Changed:		

KANON LOADING EQUIPMENT B.V.

Ref:	P242068, B242352	Quote:	
Order:	2011280786	Item:	001000

KANON LOADING EQUIPMENT
www.kanon.nl

Electromach B.V.
Jan Tinbergenstraat 193
7559 SP Hengelo
The Netherlands

Layout
Radio controller

Int. Revision :	P242068A91
Drawing No.	
2011280786-001000-24	Scale: 1 mm : 1 mm / A3
Refer to protection notice ISO 16016	Sheet: 46

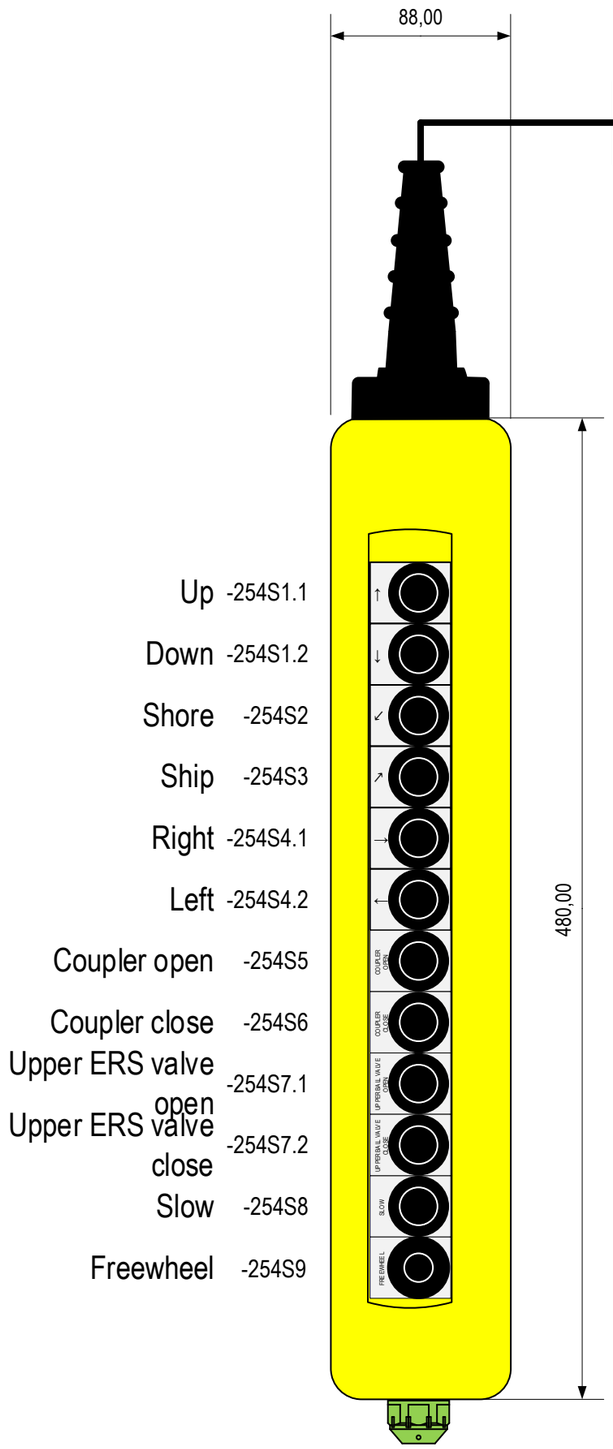

Qty [mtr]	Description (EN)
30	Cable OZ-BL-CY 18x0,75 BU

PENDANT			
-1	Com+	2x BN(+)	Up / Down
-2	Up	BU(-)	
-3	Down	BU(-)	
-4	Com+	2x BN(+)	Shore / Ship
-5	Shore	BU(-)	
-6	Ship	BU(-)	
-7	Com+	2x BN(+)	Right / Left
-8	Right	BU(-)	
-9	Left	BU(-)	
-10	Com+	2x BN(+)	Coupler open / close
-11	Open	BU(-)	
-12	Close	BU(-)	
-13	Com+	2x BN(+)	Upper ERS valve open / close
-14	Open	BU(-)	
-15	Close	BU(-)	
-16	Com+	2x BN(+)	Slow Freewheel
-17	Slow	BU(-)	
18	Freew.	BU(-)	
Screen	TE		TE

www.electromach.com NL-7559SP

STAHL ELECTROMACH

PUSHBUTTON
CONTROL UNIT XAC-A

II 2G Ex ia IIB T6 Gb
KEMA REPORT No. 2089426

Ser.: 2011xxxxxx-xxxxxx d.d. mm/yy CE

-Label (Inside/outside box)
Material : Thermoprint alu.polyester foil ace d.
Colour : Black lettering

Index	Revision	Date	name

Drawn:	31-10-2024	elshofjo	
Engineer:	19-9-2024	besselingmi	
Approved:			
Changed:			

KANON LOADING EQUIPMENT B.V.

Ref: P242068, B242352 Quote:
Order: 2011280786 Item: 001000

KANON LOADING EQUIPMENT
www.kanon.nl

Electromach B.V.
Jan Tinbergenstraat 193
7559 SP Hengelo
The Netherlands

Layout
-Pendant

Int. Revision :	P242068A91
Drawing No. 2011280786-001000-24	+HPP-Pendant
Refer to protection notice ISO 16016	Scale: 1 mm : 3 mm / A3
	Sheet: 49.1

Parts list

Row	qty.	{}▲ material	Free issue	▲1 part of	▲2 name	▲3 sales text	part number manufacturer	manufacturer
1	1	**298589**		+HPP		Hose holder 350x140mm AL	14050003	BOTT
2	1	**138578**		+HPP -Pendant		8162/1-25-1 , Breather M25 With nut , Polyamide	138578	R. STAHL
3	2	**297648**		+HPP -Pendant		Blindstop ZB2SZ3 BK	ZB2SZ3	SCHNEIDER
4	1	**297645**		+HPP -Pendant		Housing f. hanging switch XAC-A 12 holes	XACA12	SCHNEIDER
5	30	**297346**		+HPP -Pendant -W01…		Cable OZ-BL-CY 18x0,75 BU		
6	1	**297580**		+HPP -Pendant	-254S1.1	Inductive sensor NJ1,5-8GM-N	106361	PEPPERL + FUCHS AG
7	1	**297646**		+HPP -Pendant -254S…		Pushbutton XACA9412 BK w.protectiv cap	XACA9412	SCHNEIDER
8	1	**297580**		+HPP -Pendant	-254S1.2	Inductive sensor NJ1,5-8GM-N	106361	PEPPERL + FUCHS AG
9	1	**297646**		+HPP -Pendant -254S…		Pushbutton XACA9412 BK w.protectiv cap	XACA9412	SCHNEIDER
10	1	**297580**		+HPP -Pendant	-254S2	Inductive sensor NJ1,5-8GM-N	106361	PEPPERL + FUCHS AG
11	1	**297646**		+HPP -Pendant -254S2		Pushbutton XACA9412 BK w.protectiv cap	XACA9412	SCHNEIDER
12	1	**297580**		+HPP -Pendant	-254S3	Inductive sensor NJ1,5-8GM-N	106361	PEPPERL + FUCHS AG
13	1	**297646**		+HPP -Pendant -254S3		Pushbutton XACA9412 BK w.protectiv cap	XACA9412	SCHNEIDER
14	1	**297580**		+HPP -Pendant	-254S4.1	Inductive sensor NJ1,5-8GM-N	106361	PEPPERL + FUCHS AG
15	1	**297646**		+HPP -Pendant -254S…		Pushbutton XACA9412 BK w.protectiv cap	XACA9412	SCHNEIDER
16	1	**297580**		+HPP -Pendant	-254S4.2	Inductive sensor NJ1,5-8GM-N	106361	PEPPERL + FUCHS AG
17	1	**297646**		+HPP -Pendant -254S…		Pushbutton XACA9412 BK w.protectiv cap	XACA9412	SCHNEIDER
18	1	**297580**		+HPP -Pendant	-254S5	Inductive sensor NJ1,5-8GM-N	106361	PEPPERL + FUCHS AG
19	1	**297646**		+HPP -Pendant -254S5		Pushbutton XACA9412 BK w.protectiv cap	XACA9412	SCHNEIDER
20	1	**297580**		+HPP -Pendant	-254S6	Inductive sensor NJ1,5-8GM-N	106361	PEPPERL + FUCHS AG
21	1	**297646**		+HPP -Pendant -254S6		Pushbutton XACA9412 BK w.protectiv cap	XACA9412	SCHNEIDER
22	1	**297580**		+HPP -Pendant	-254S7.1	Inductive sensor NJ1,5-8GM-N	106361	PEPPERL + FUCHS AG
23	1	**297646**		+HPP -Pendant -254S…		Pushbutton XACA9412 BK w.protectiv cap	XACA9412	SCHNEIDER
24	1	**297580**		+HPP -Pendant	-254S7.2	Inductive sensor NJ1,5-8GM-N	106361	PEPPERL + FUCHS AG
25	1	**297646**		+HPP -Pendant -254S…		Pushbutton XACA9412 BK w.protectiv cap	XACA9412	SCHNEIDER
26	1	**297580**		+HPP -Pendant	-254S8	Inductive sensor NJ1,5-8GM-N	106361	PEPPERL + FUCHS AG
27	1	**297646**		+HPP -Pendant -254S8		Pushbutton XACA9412 BK w.protectiv cap	XACA9412	SCHNEIDER
28	1	**297580**		+HPP -Pendant	-254S9	Inductive sensor NJ1,5-8GM-N	106361	PEPPERL + FUCHS AG
29	1	**297646**		+HPP -Pendant -254S9		Pushbutton XACA9412 BK w.protectiv cap	XACA9412	SCHNEIDER

Index	Revision	Date	name					
2	Final as built	19-3-2025	M.Besseling	Drawn:	31-10-2024	elshofjo	**KANON LOADING EQUIPMENT B.V.**	
2	For approval	13-11-2024	besselingmi	Engineer:	19-9-2024	besselingmi		
2				Approved:			Ref: P242068, B242352	Quote:
				Changed:			Order: 2011280786	Item: 001000

KANON LOADING EQUIPMENT
www.kanon.nl

Electromach BV
Jan Tinbergenstraat 193
7559 SP Hengelo
The Netherlands

Parts list
-Pendant

Int. Revision :	P242068A91
Drawing No.: 2011280786-001000-24	+HPP-Pendant
	Scale: 1 mm : 1 mm / A3
Refer to protection notice ISO 16016	Sheet: 49.2 page 1 / 1

List of nameplates

Part of	Text 1	Text 2	Text 3	Material	Width	Height	Fixing	Char. Height	Backgr. Color	Letter Color
+HPP -Pendant				plastic	39,50 mm	30,00 mm	pasted	3 mm	White	Black
+HPP -Pendant				plastic	39,50 mm	30,00 mm	pasted	3 mm	White	Black
+HPP -Pendant -254S1.1	↑			plastic	39,50 mm	30,00 mm	pasted	3 mm	White	Black
+HPP -Pendant -254S1.2	↓			plastic	39,50 mm	30,00 mm	pasted	3 mm	White	Black
+HPP -Pendant -254S2	↙			plastic	39,50 mm	30,00 mm	pasted	3 mm	White	Black
+HPP -Pendant -254S3	↗			plastic	39,50 mm	30,00 mm	pasted	3 mm	White	Black
+HPP -Pendant -254S4.1	→			plastic	39,50 mm	30,00 mm	pasted	3 mm	White	Black
+HPP -Pendant -254S4.2	←			plastic	39,50 mm	30,00 mm	pasted	3 mm	White	Black
+HPP -Pendant -254S5	COUPLER	OPEN		plastic	39,50 mm	30,00 mm	pasted	3 mm	White	Black
+HPP -Pendant -254S6	COUPLER	CLOSE		plastic	39,50 mm	30,00 mm	pasted	3 mm	White	Black
+HPP -Pendant -254S7.1	UPPER BALL VALVE	OPEN		plastic	39,50 mm	30,00 mm	pasted	3 mm	White	Black
+HPP -Pendant -254S7.2	UPPER BALL VALVE	CLOSE		plastic	39,50 mm	30,00 mm	pasted	3 mm	White	Black
+HPP -Pendant -254S8	SLOW			plastic	39,50 mm	30,00 mm	pasted	3 mm	White	Black
+HPP -Pendant -254S9	FREEWHEEL			plastic	39,50 mm	30,00 mm	pasted	3 mm	White	Black

Index	Revision	Date	name
2	Final as built	19-3-2025	M.Besseling
2	For approval	13-11-2024	besselingmi
2			

Drawn:	31-10-2024	elshofjo
Engineer:	19-9-2024	besselingmi
Approved:		
Changed:		

KANON LOADING EQUIPMENT B.V.

Ref: P242068, B242352 Quote:

Order: 2011280786 Item: 001000

KANON LOADING EQUIPMENT

www.kanon.nl

Electromach BV
Jan Tinbergenstraat 193
7559 SP Hengelo
The Netherlands

List of nameplates
-Pendant

Int. Revision :

Drawing No.:
2011280786-001000-24

Refer to protection notice ISO 16016

P242068A91

+HPP-Pendant

Scale: 1 mm : 1 mm / A3

Sheet: 49.3 page 1 / 1

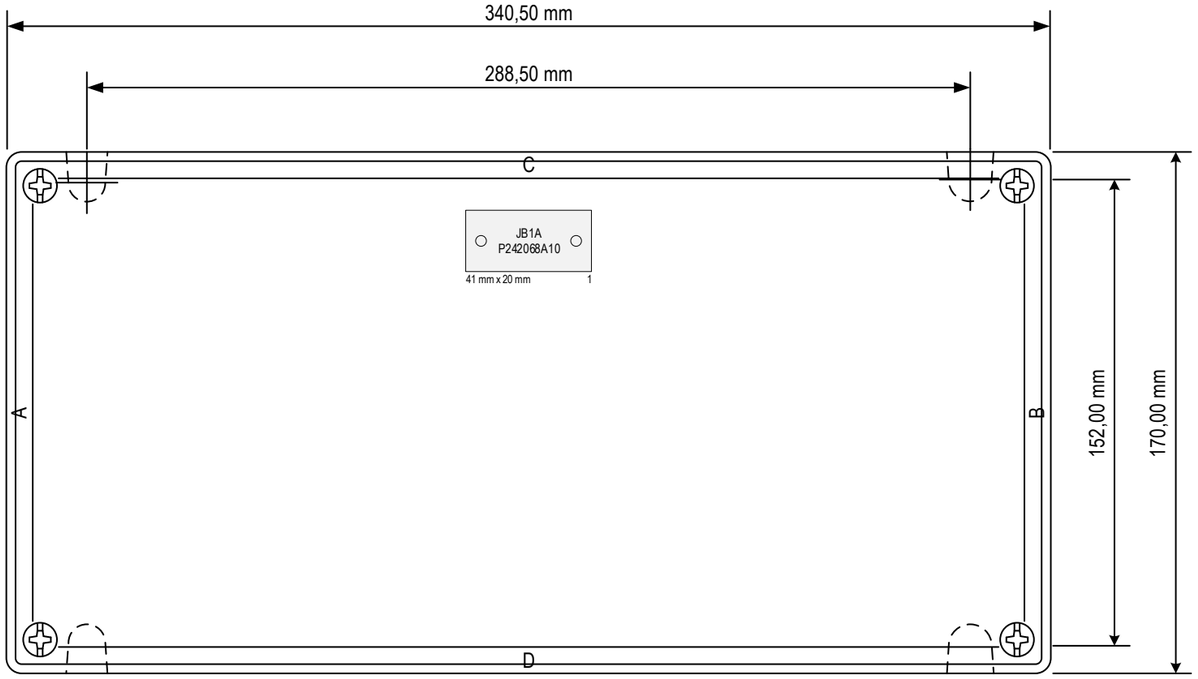

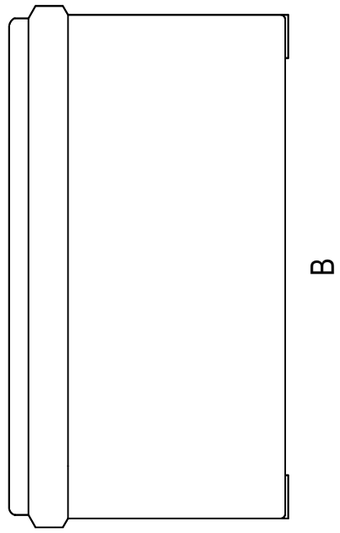

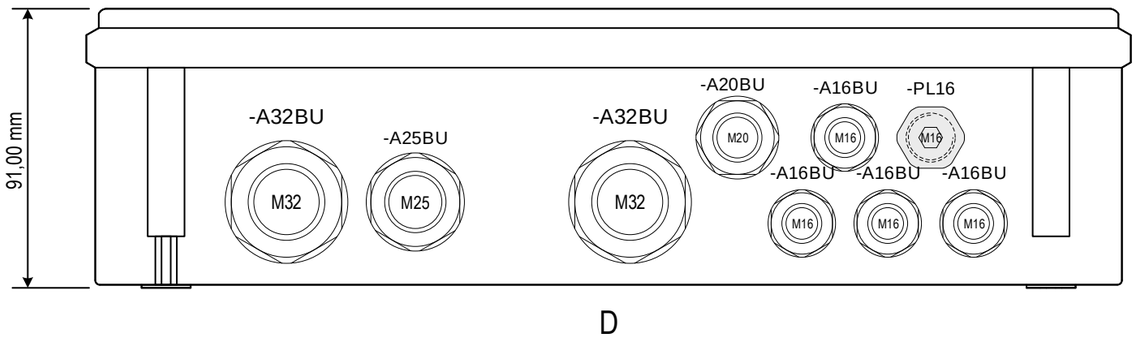

Type designation:	8146/2071
ATEX certificate:	PTB 01 ATEX 1016
ATEX Explosion protection:	II 2 G Ex ia ib IIC T6 Gb
IECEx certificate:	IECEx PTB 06.0046
IECEx Explosion protection:	Ex ia ib IIC T6 Gb
Further certificate:	NA
Further Explosion protection:	NA
PESO certificate:	NA
Degree of protection:	IP66
Ambient temperature:	Ta -20°C...+75°C
Rated Voltage:	60V
Connection cross-section	2,5mm²
Rated current	NA
Rated frequency:	NA
Material labels:	Polyester foil
Fixing labels:	Adhesive label
Nice label number:	138064

Index	Revision	Date	name
2	Final as built	19-3-2025	M.Besseling
1	For approval	13-11-2024	besselingmi

Drawn: 31-10-2024 elshofjo
Engineer: 19-9-2024 besselingmi
Approved:
Changed:

KANON LOADING EQUIPMENT B.V.

Ref: P242068, B242352 Quote:
Order: 2011280786 Item: 001000

KANON LOADING EQUIPMENT
www.kanon.nl

Electromach B.V.
Jan Tinbergenstraat 193
7559 SP Hengelo
The Netherlands
US

Layout
JB1. external

Int. Revision : P242068A91
Drawing No. 2011280786-001000-24
+MLA-A-JB1A
Scale: 1 mm : 2 mm / A3
Refer to protection notice ISO 16016
Sheet: 51.1

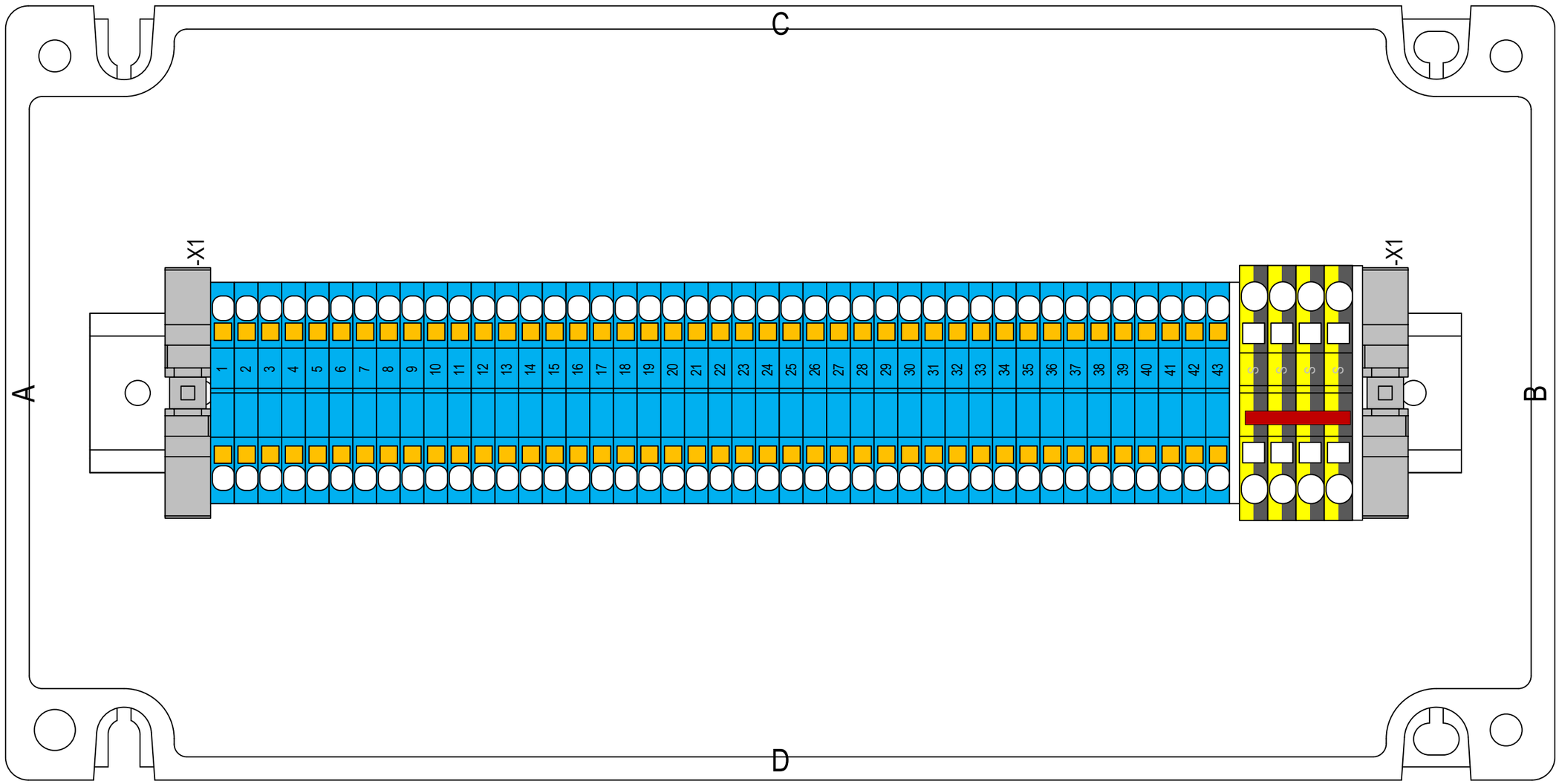

2	*Final as built*	*19-3-2025*	*M.Besseling*	Drawn:	*31-10-2024*	*elshofjo*	***KANON LOADING EQUIPMENT B.V.***		***Electromach B.V.***	Layout	Int. Revision :	*P242068A91*
1	*For approval*	*13-11-2024*	*besselingmi*	Engineer:	*19-9-2024*	*besselingmi*			*Jan Tinbergenstraat 193*	JB1. internal	Drawing No.	*+MLA-A-JB1A*
				Approved:			Ref: *P242068, B242352*	Quote:	*7559 SP Hengelo*		*2011280786-001000-24*	Scale: *1 mm : 1 mm / A3*
Index	Revision	Date	name	Changed:			Order: *2011280786*	Item: *001000*	*The Netherlands*		Refer to protection notice ISO 16016	Sheet: *51.2*

www.kanon.nl

Parts list

Row	Qty.	{}▲ SAP	Free issue	▲1 part of	▲2 name	▲3 Description	part number manufactu…	manufacturer
1	1	**286225**		+MLA-A -JB1A		8146A-071 Ex e empty enclosure Polyester resin Glass fibre reinforced		R. STAHL
2	1	**137983**		+MLA-A -JB1A		mounting rail TS35 in enclosure 8146 for terminals length: 301mm		R. STAHL
3	4	**229954**		+MLA-A -JB1A	-A16BU	8161/8-M16-0902 , 2 ... 9 mm Cable gland M16 , Polyamide Blue		R. STAHL
4	1	**229955**		+MLA-A -JB1A	-A20BU	8161/8-M20-1304 , 4 ... 13 mm Cable gland M20 , Polyamide Blue		R. STAHL
5	1	**229956**		+MLA-A -JB1A	-A25BU	8161/8-M25-1707 , 7 ... 17 mm Cable gland M25 , Polyamide Blue		R. STAHL
6	2	**229957**		+MLA-A -JB1A	-A32BU	8161/8-M32-2109 Cable gland M32 9 ... 21 mm Unarmoured cable types , Polyamide , Blue		R. STAHL
7	1	**245532**		+MLA-A -JB1A	-Ex label	Marking KDE 8146/2 ATEX/IEC		R. STAHL
8	1	**143554**		+MLA-A -JB1A	-PL16	8290/3-M16 Stopping plug M16 , Polyamide		R. STAHL
9	4	**110863**		+MLA-A -JB1A -A16BU		Nut M16x1,5 Ms nickel plated	10063142	WISKA
10	1	**110865**		+MLA-A -JB1A -A20BU		Nut M20x1,5 Ms nickel plated	10063143	WISKA
11	1	**110867**		+MLA-A -JB1A -A25BU		Nut M25x1,5 Ms nickel plated	10063144	WISKA
12	2	**110869**		+MLA-A -JB1A -A32BU		Nut M32x1,5 Ms nickel plated		WISKA
13	1	**110863**		+MLA-A -JB1A -PL16		Nut M16x1,5 Ms nickel plated	10063142	WISKA
14	1	**112591**		+MLA-A -JB1A -X1		Cover D-ST 2,5	3030417	PHOENIX
15	1	**112921**		+MLA-A -JB1A -X1		End plate D-ST 4 Width : 2.200 mm, Grey	3030420	PHOENIX
16	1	**113071**		+MLA-A -JB1A -X1		Jumper FBS 4-6	3030255	PHOENIX
17	2	**112434**		+MLA-A -JB1A -X1		end bracket CLIPFIX 35	3022218	PHOENIX
18	43	**257739**		+MLA-A -JB1A -X1	1...43	PT 2,5 BU Terminal block , Blue	3209523	PHOENIX
19	4	**319293**		+MLA-A -JB1A -X1	S	PT 4-FE terminal black-yellow	1077082	PHOENIX

Index	Revision	Date	name			
2	*Final as built*	*19-3-2025*	*M.Besseling*	Drawn:	*31-10-2024*	*elshofjo*
2	*For approval*	*13-11-2024*	*besselingmi*	Engineer:	*19-9-2024*	*besselingmi*
2				Approved:		
				Changed:		

KANON LOADING EQUIPMENT B.V.

Ref: *P242068, B242352* Quote:

Order: *2011280786* Item: *001000*

KANON LOADING EQUIPMENT

www.kanon.nl

Electromach BV
Jan Tinbergenstraat 193
7559 SP Hengelo
The Netherlands

Parts list
JB1

Int. Revision : *P242068A91*

Drawing No.: *+MLA-A-JB1A*

2011280786-001000-24

Scale: *1 mm : 1 mm / A3*

Refer to protection notice ISO 16016

Sheet: *51.3* page *1 / 1*

List of nameplates

Part of	Designation	Text 1	Text 2	Text 3	Material	Width	Height	Fixing	Char. Height	Backgr. Color	Letter Color
+MLA-A -JB1A		JB1A	P242068A10		plastic	41,00 mm	20,00 mm	screwed	5 / 3 mm	White	Black
+MLA-A -JB1A		JB1B	P242068B10		plastic	41,00 mm	20,00 mm	screwed	5 / 3 mm	White	Black

Index	Revision	Date	name					
2	Final as built	19-3-2025	M.Besseling	Drawn:	31-10-2024	elshofjo	**KANON LOADING EQUIPMENT B.V.**	
2	For approval	13-11-2024	besselingmi	Engineer:	19-9-2024	besselingmi		
2				Approved:			Ref: P242068, B242352	Quote:
				Changed:			Order: 2011280786	Item: 001000

KANON LOADING EQUIPMENT
www.kanon.nl

Electromach BV
Jan Tinbergenstraat 193
7559 SP Hengelo
The Netherlands
US

List of nameplates
JB1

Int. Revision :	P242068A91
Drawing No.: 2011280786-001000-24	+MLA-A-JB1A
Refer to protection notice ISO 16016	Scale: 1 mm : 1 mm / A3
	Sheet: 51.4 page 1 / 1

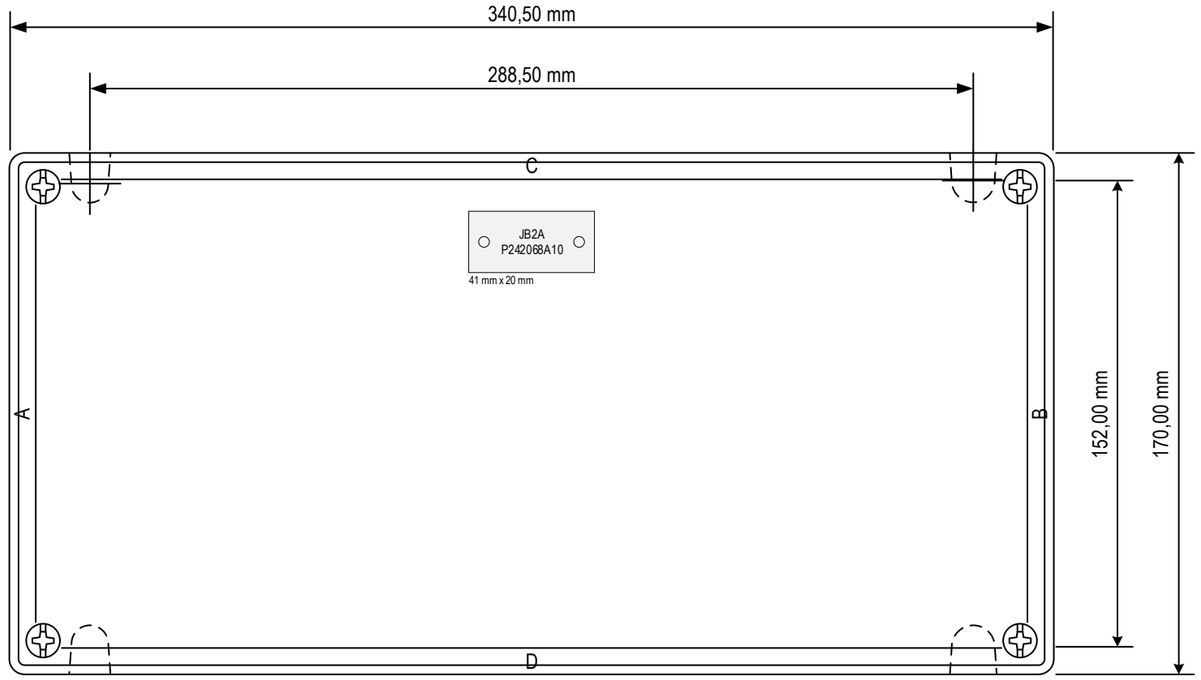

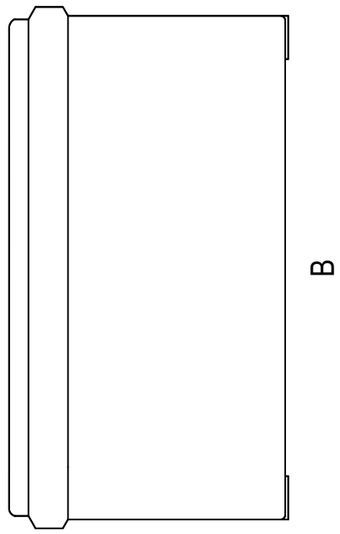

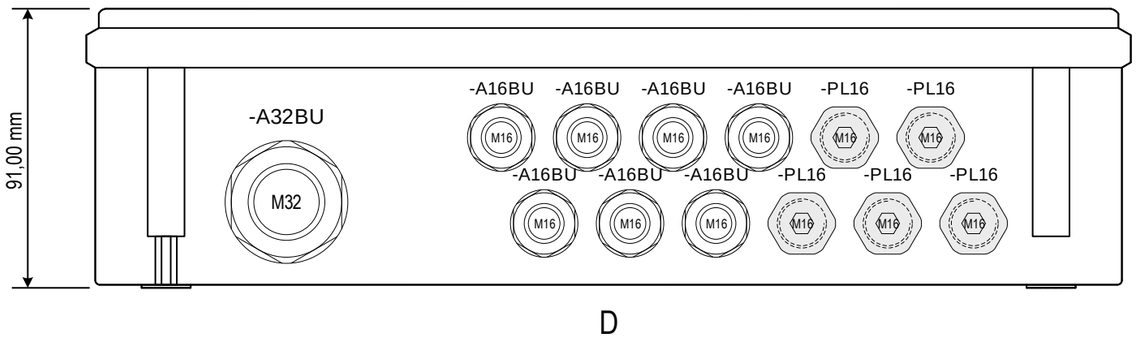

Type designation:	8146/2071
ATEX certificate:	PTB 01 ATEX 1016
ATEX Explosion protection:	II 2 G Ex ia ib IIC T6 Gb
IECEx certificate:	IECEx PTB 06.0046
IECEx Explosion protection:	Ex ia ib IIC T6 Gb
Further certificate:	NA
Further Explosion protection:	NA
PESO certificate:	NA
Degree of protection:	IP66
Ambient temperature:	Ta -20°C...+75°C
Rated Voltage:	60V
Connection cross-section	2,5mm²
Rated current	NA
Rated frequency:	NA
Material labels:	Polyester foil
Fixing labels:	Adhesive label
Nice label number:	138064

Index	Revision	Date	name
2	Final as built	19-3-2025	M.Besseling
1	For approval	13-11-2024	besselingmi

Drawn:	31-10-2024	elshofjo	
Engineer:	19-9-2024	besselingmi	
Approved:			
Changed:			

KANON LOADING EQUIPMENT B.V.

Ref: P242068, B242352 Quote:

Order: 2011280786 Item: 001000

KANON LOADING EQUIPMENT
www.kanon.nl

Electromach B.V.
Jan Tinbergenstraat 193
7559 SP Hengelo
The Netherlands
US

Layout
JB2. external

Int. Revision :	P242068A91
Drawing No.	+MLA-A-JB2A
2011280786-001000-24	Scale: 1 mm : 2 mm / A3
Refer to protection notice ISO 16016	Sheet: 52.1

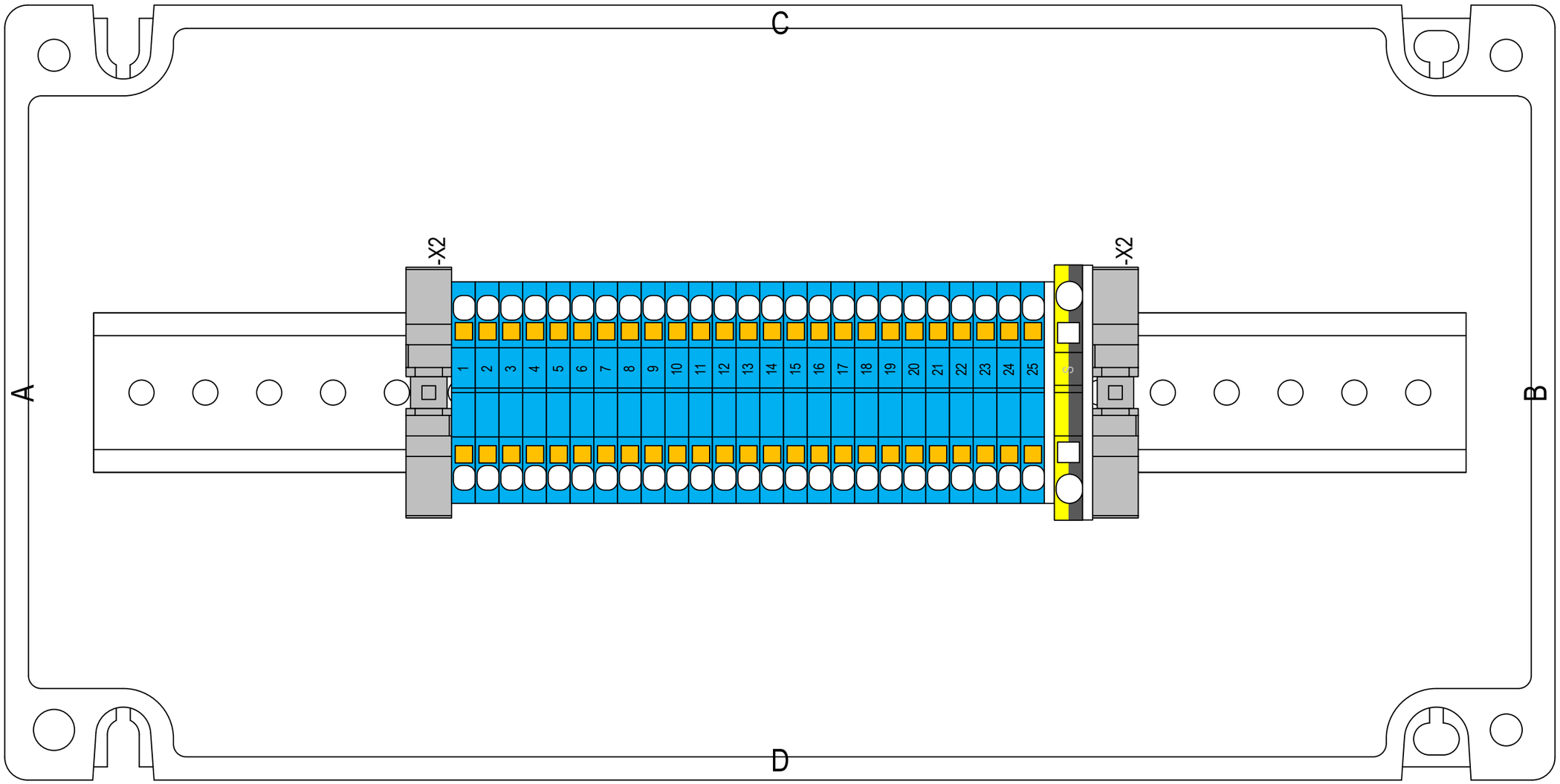

2	*Final as built*	*19-3-2025*	*M.Besseling*	Drawn:	*31-10-2024*	*elshofjo*	***KANON LOADING EQUIPMENT B.V.***		***Electromach B.V.***	Layout	Int. Revision :	*P242068A91*
1	*For approval*	*13-11-2024*	*besselingmi*	Engineer:	*19-9-2024*	*besselingmi*			*Jan Tinbergenstraat 193*	JB2. internal	Drawing No.	*+MLA-A-JB2A*
				Approved:			Ref: *P242068, B242352*	Quote:	*7559 SP Hengelo*		*2011280786-001000-24*	Scale: *1 mm : 1 mm / A3*
Index	Revision	Date	name	Changed:			Order: *2011280786*	Item: *001000*	*The Netherlands*		Refer to protection notice ISO 16016	Sheet: *52.2*

KANON LOADING EQUIPMENT
www.kanon.nl

Parts list

Row	Qty.	{}▲ SAP	Free issue	▲1 part of	▲2 name	▲3 Description	part number manufactu…	manufacturer
1	1	**286225**		+MLA-A -JB2A		8146A-071 Ex e empty enclosure Polyester resin Glass fibre reinforced		R. STAHL
2	1	**137983**		+MLA-A -JB2A		mounting rail TS35 in enclosure 8146 for terminals length: 301mm		R. STAHL
3	1	**229954**		+MLA-A -JB2A	-A16BU	8161/8-M16-0902 , 2 ... 9 mm Cable gland M16 , Polyamide Blue		R. STAHL
4	1	**110863**		+MLA-A -JB2A -A16BU		Nut M16x1,5 Ms nickel plated	10063142	WISKA
5	1	**229954**		+MLA-A -JB2A	-A16BU	8161/8-M16-0902 , 2 ... 9 mm Cable gland M16 , Polyamide Blue		R. STAHL
6	1	**110863**		+MLA-A -JB2A -A16BU		Nut M16x1,5 Ms nickel plated	10063142	WISKA
7	1	**229954**		+MLA-A -JB2A	-A16BU	8161/8-M16-0902 , 2 ... 9 mm Cable gland M16 , Polyamide Blue		R. STAHL
8	1	**110863**		+MLA-A -JB2A -A16BU		Nut M16x1,5 Ms nickel plated	10063142	WISKA
9	1	**229954**		+MLA-A -JB2A	-A16BU	8161/8-M16-0902 , 2 ... 9 mm Cable gland M16 , Polyamide Blue		R. STAHL
10	1	**110863**		+MLA-A -JB2A -A16BU		Nut M16x1,5 Ms nickel plated	10063142	WISKA
11	1	**229954**		+MLA-A -JB2A	-A16BU	8161/8-M16-0902 , 2 ... 9 mm Cable gland M16 , Polyamide Blue		R. STAHL
12	1	**110863**		+MLA-A -JB2A -A16BU		Nut M16x1,5 Ms nickel plated	10063142	WISKA
13	1	**229954**		+MLA-A -JB2A	-A16BU	8161/8-M16-0902 , 2 ... 9 mm Cable gland M16 , Polyamide Blue		R. STAHL
14	1	**110863**		+MLA-A -JB2A -A16BU		Nut M16x1,5 Ms nickel plated	10063142	WISKA
15	1	**229954**		+MLA-A -JB2A	-A16BU	8161/8-M16-0902 , 2 ... 9 mm Cable gland M16 , Polyamide Blue		R. STAHL
16	1	**110863**		+MLA-A -JB2A -A16BU		Nut M16x1,5 Ms nickel plated	10063142	WISKA
17	1	**229957**		+MLA-A -JB2A	-A32BU	8161/8-M32-2109 Cable gland M32 9 ... 21 mm Unarmoured cable types , Polyamide , Blue		R. STAHL
18	1	**110869**		+MLA-A -JB2A -A32BU		Nut M32x1,5 Ms nickel plated		WISKA
19	1	**245532**		+MLA-A -JB2A	-Ex label	Marking KDE 8146/2 ATEX/IEC		R. STAHL
20	1	**143554**		+MLA-A -JB2A	-PL16	8290/3-M16 Stopping plug M16 , Polyamide		R. STAHL
21	1	**110863**		+MLA-A -JB2A -PL16		Nut M16x1,5 Ms nickel plated	10063142	WISKA
22	1	**143554**		+MLA-A -JB2A	-PL16	8290/3-M16 Stopping plug M16 , Polyamide		R. STAHL
23	1	**110863**		+MLA-A -JB2A -PL16		Nut M16x1,5 Ms nickel plated	10063142	WISKA
24	1	**143554**		+MLA-A -JB2A	-PL16	8290/3-M16 Stopping plug M16 , Polyamide		R. STAHL
25	1	**110863**		+MLA-A -JB2A -PL16		Nut M16x1,5 Ms nickel plated	10063142	WISKA
26	1	**143554**		+MLA-A -JB2A	-PL16	8290/3-M16 Stopping plug M16 , Polyamide		R. STAHL
27	1	**110863**		+MLA-A -JB2A -PL16		Nut M16x1,5 Ms nickel plated	10063142	WISKA
28	1	**143554**		+MLA-A -JB2A	-PL16	8290/3-M16 Stopping plug M16 , Polyamide		R. STAHL
29	1	**110863**		+MLA-A -JB2A -PL16		Nut M16x1,5 Ms nickel plated	10063142	WISKA
30	1	**112591**		+MLA-A -JB2A -X2		Cover D-ST 2,5	3030417	PHOENIX
31	1	**112921**		+MLA-A -JB2A -X2		End plate D-ST 4 Width : 2.200 mm, Grey	3030420	PHOENIX
32	2	**112434**		+MLA-A -JB2A -X2		end bracket CLIPFIX 35	3022218	PHOENIX
33	25	**257739**		+MLA-A -JB2A -X2	1...25	PT 2,5 BU Terminal block , Blue	3209523	PHOENIX
34	1	**319293**		+MLA-A -JB2A -X2	S	PT 4-FE terminal black-yellow	1077082	PHOENIX

Index	Revision	Date	name					
2	Final as built	19-3-2025	M.Besseling	Drawn:	31-10-2024	elshofjo	**KANON LOADING EQUIPMENT B.V.**	
2	For approval	13-11-2024	besselingmi	Engineer:	19-9-2024	besselingmi		
2				Approved:			Ref: P242068, B242352	Quote:
				Changed:			Order: 2011280786	Item: 001000

KANON LOADING EQUIPMENT
www.kanon.nl

Electromach BV
Jan Tinbergenstraat 193
7559 SP Hengelo
The Netherlands

Parts list
JB2.

Int. Revision :	P242068A91
Drawing No.:	+MLA-A-JB2A
2011280786-001000-24	Scale: 1 mm : 1 mm / A3
Refer to protection notice ISO 16016	Sheet: 52.3 page 1 / 1

List of nameplates

Part of	Designation	Text 1	Text 2	Text 3	Material	Width	Height	Fixing	Char. Height	Backgr. Color	Letter Color
+MLA-A -JB2A		JB2A	P242068A10		plastic	41,00 mm	20,00 mm	screwed	5 / 3 mm	White	Black
+MLA-A -JB2A		JB2B	P242068B10		plastic	41,00 mm	20,00 mm	screwed	5 / 3 mm	White	Black

Index	Revision	Date	name				
2	Final as built	19-3-2025	M.Besseling	Drawn:	31-10-2024	elshofjo	
2	For approval	13-11-2024	besselingmi	Engineer:	19-9-2024	besselingmi	
2				Approved:			
				Changed:			

KANON LOADING EQUIPMENT B.V.

Ref: P242068, B242352 Quote:

Order: 2011280786 Item: 001000

KANON LOADING EQUIPMENT

www.kanon.nl

Electromach BV
Jan Tinbergenstraat 193
7559 SP Hengelo
The Netherlands
US

List of nameplates
JB2.

Int. Revision :	P242068A91
Drawing No.: 2011280786-001000-24	+MLA-A-JB2A
Refer to protection notice ISO 16016	Scale: 1 mm : 1 mm / A3
	Sheet: 52.4 page 1 / 1

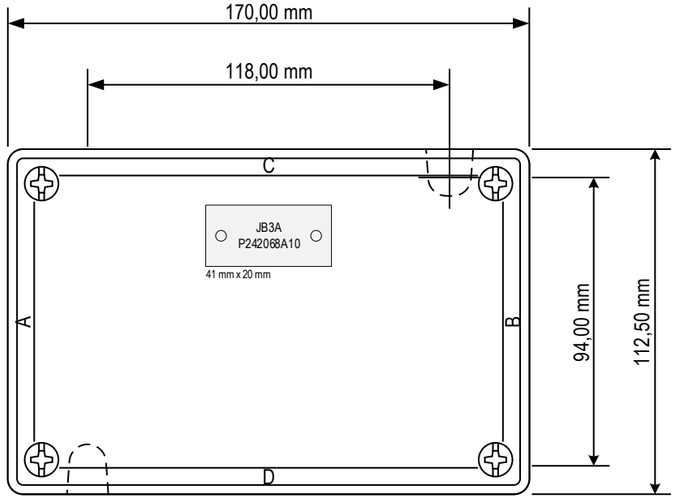

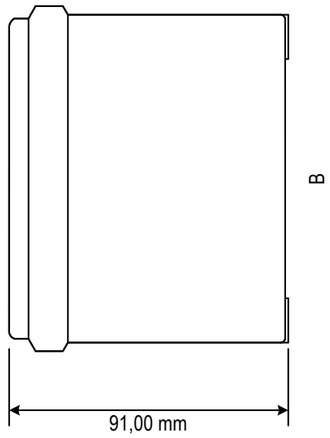

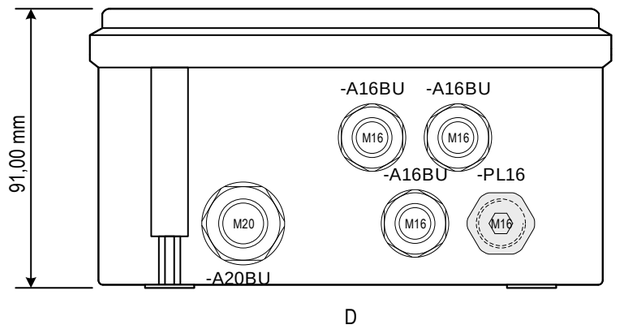

Type designation:	8146/2041
ATEX certificate:	PTB 01 ATEX 1016
ATEX Explosion protection:	II 2 G Ex ia ib IIC T6 Gb
IECEx certificate:	IECEx PTB 06.0046
IECEx Explosion protection:	Ex ia ib IIC T6 Gb
Further certificate:	NA
Further Explosion protection:	NA
PESO certificate:	NA
Degree of protection:	IP66
Ambient temperature:	Ta -20°C...+75°C
Rated Voltage:	60V
Connection cross-section	2,5mm²
Rated current	NA
Rated frequency:	NA
Material labels:	Polyester foil
Fixing labels:	Adhesive label
Nice label number:	138064

Index	Revision	Date	name			
2	Final as built	19-3-2025	M.Besseling	Drawn:	31-10-2024	elshofjo
1	For approval	13-11-2024	besselingmi	Engineer:	19-9-2024	besselingmi
				Approved:		
				Changed:		

KANON LOADING EQUIPMENT B.V.

Ref: P242068, B242352 Quote:
Order: 2011280786 Item: 001000

KANON LOADING EQUIPMENT
www.kanon.nl

Electromach B.V.
Jan Tinbergenstraat 193
7559 SP Hengelo
The Netherlands
US

Layout
JB3. external

Int. Revision :	P242068A91
Drawing No.	+MLA-A-JB3A
2011280786-001000-24	Scale: 1 mm : 2 mm / A3
Refer to protection notice ISO 16016	Sheet: 53.1

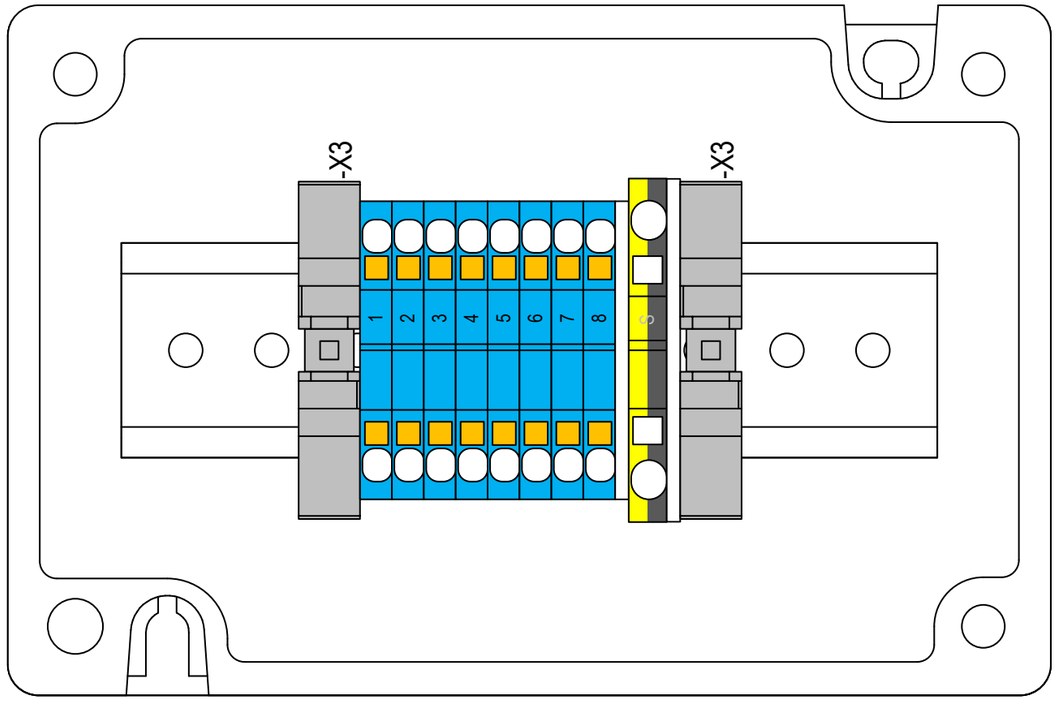

Index	Revision	Date	name			
2	Final as built	19-3-2025	M.Besseling	Drawn:	31-10-2024	elshofjo
1	For approval	13-11-2024	besselingmi	Engineer:	19-9-2024	besselingmi
				Approved:		
				Changed:		

KANON LOADING EQUIPMENT B.V.

Ref: P242068, B242352 Quote:

Order: 2011280786 Item: 001000

KANON LOADING EQUIPMENT

www.kanon.nl

Electromach B.V.
Jan Tinbergenstraat 193
7559 SP Hengelo
The Netherlands
US

Layout
JB3. internal

Int. Revision :	P242068A91
Drawing No.	+MLA-A-JB3A
2011280786-001000-24	Scale: 1 mm : 1 mm / A3
Refer to protection notice ISO 16016	Sheet: 53.2

Parts list

Row	Qty.	{}▲ SAP	Free issue	▲1 part of	▲2 name	▲3 Description	part number manufactu…	manufacturer
1	1	**286138**		+MLA-A -JB3A		8146A-041 Empty enclosure Ex e Polyester resin Glass fibre reinforced		R. STAHL
2	1	**137970**		+MLA-A -JB3A		mounting rail TS35 in enclosure 8146 for terminals length: 133mm		R. STAHL
3	1	**229954**		+MLA-A -JB3A	-A16BU	8161/8-M16-0902 , 2 ... 9 mm Cable gland M16 , Polyamide Blue		R. STAHL
4	1	**110863**		+MLA-A -JB3A -A16BU		Nut M16x1,5 Ms nickel plated	10063142	WISKA
5	1	**229954**		+MLA-A -JB3A	-A16BU	8161/8-M16-0902 , 2 ... 9 mm Cable gland M16 , Polyamide Blue		R. STAHL
6	1	**110863**		+MLA-A -JB3A -A16BU		Nut M16x1,5 Ms nickel plated	10063142	WISKA
7	1	**229954**		+MLA-A -JB3A	-A16BU	8161/8-M16-0902 , 2 ... 9 mm Cable gland M16 , Polyamide Blue		R. STAHL
8	1	**110863**		+MLA-A -JB3A -A16BU		Nut M16x1,5 Ms nickel plated	10063142	WISKA
9	1	**229955**		+MLA-A -JB3A	-A20BU	8161/8-M20-1304 , 4 ... 13 mm Cable gland M20 , Polyamide Blue		R. STAHL
10	1	**110865**		+MLA-A -JB3A -A20BU		Nut M20x1,5 Ms nickel plated	10063143	WISKA
11	1	**245532**		+MLA-A -JB3A	-Ex label	Marking KDE 8146/2 ATEX/IEC		R. STAHL
12	1	**143554**		+MLA-A -JB3A	-PL16	8290/3-M16 Stopping plug M16 , Polyamide		R. STAHL
13	1	**110863**		+MLA-A -JB3A -PL16		Nut M16x1,5 Ms nickel plated	10063142	WISKA
14	1	**112591**		+MLA-A -JB3A -X3		Cover D-ST 2,5	3030417	PHOENIX
15	1	**112921**		+MLA-A -JB3A -X3		End plate D-ST 4 Width : 2.200 mm, Grey	3030420	PHOENIX
16	2	**112434**		+MLA-A -JB3A -X3		end bracket CLIPFIX 35	3022218	PHOENIX
17	8	**257739**		+MLA-A -JB3A -X3	1...8	PT 2,5 BU Terminal block , Blue	3209523	PHOENIX
18	1	**319293**		+MLA-A -JB3A -X3	S	PT 4-FE terminal black-yellow	1077082	PHOENIX

Index	Revision	Date	name			
2	*Final as built*	*19-3-2025*	*M.Besseling*	Drawn:	*31-10-2024*	*elshofjo*
2	*For approval*	*13-11-2024*	*besselingmi*	Engineer:	*19-9-2024*	*besselingmi*
2				Approved:		
				Changed:		

KANON LOADING EQUIPMENT B.V.

Ref: *P242068, B242352* Quote:

Order: *2011280786* Item: *001000*

KANON LOADING EQUIPMENT

www.kanon.nl

Electromach BV
Jan Tinbergenstraat 193
7559 SP Hengelo
The Netherlands

Parts list
JB3.

Int. Revision : *P242068A91*
Drawing No.: *+MLA-A-JB3A*
2011280786-001000-24
Scale: *1 mm : 1 mm / A3*
Refer to protection notice ISO 16016
Sheet: *53.3* page *1 / 1*

List of nameplates

Part of	Designation	Text 1	Text 2	Text 3	Material	Width	Height	Fixing	Char. Height	Backgr. Color	Letter Color
+MLA-A -JB3A		JB3A	P242068A10		plastic	41,00 mm	20,00 mm	screwed	5 / 3 mm	White	Black
+MLA-A -JB3A		JB3B	P242068B10		plastic	41,00 mm	20,00 mm	screwed	5 / 3 mm	White	Black

Index	Revision	Date	name				
2	Final as built	19-3-2025	M.Besseling	Drawn:	31-10-2024	elshofjo	
2	For approval	13-11-2024	besselingmi	Engineer:	19-9-2024	besselingmi	
2				Approved:			
				Changed:			

KANON LOADING EQUIPMENT B.V.

Ref: P242068, B242352 Quote:

Order: 2011280786 Item: 001000

KANON LOADING EQUIPMENT

www.kanon.nl

Electromach BV
Jan Tinbergenstraat 193
7559 SP Hengelo
The Netherlands
US

List of nameplates
JB3.

Int. Revision :	P242068A91
Drawing No.: 2011280786-001000-24	+MLA-A-JB3A
Refer to protection notice ISO 16016	Scale: 1 mm : 1 mm / A3
	Sheet: 53.4 page 1 / 1

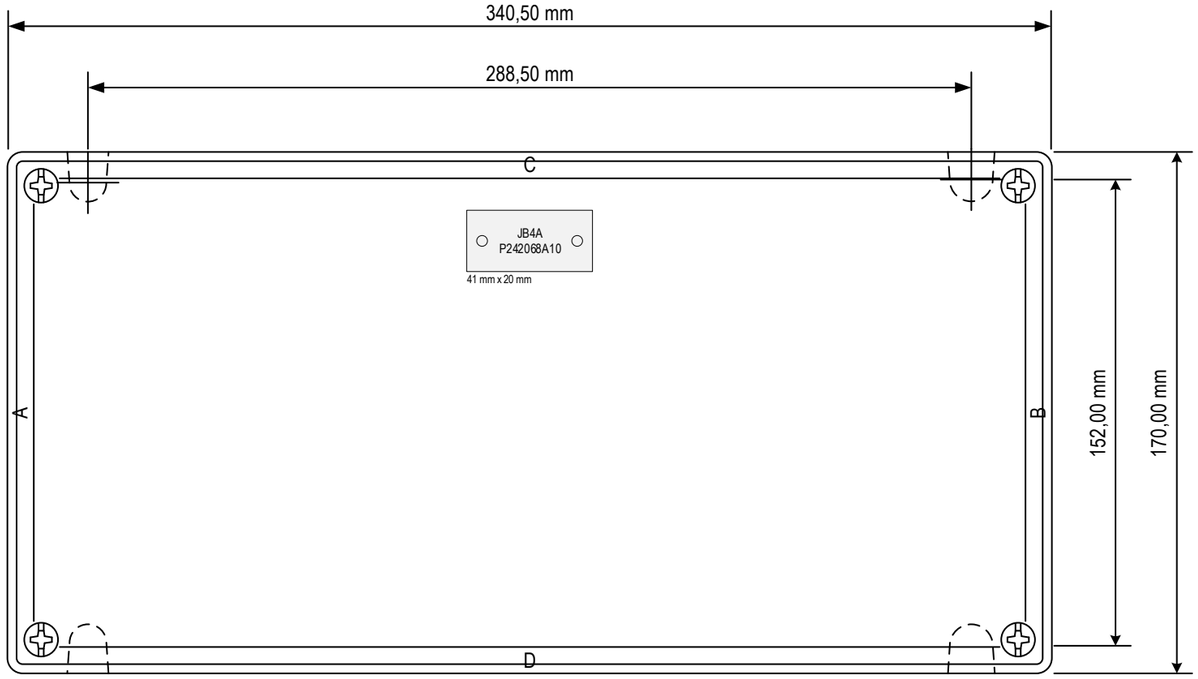

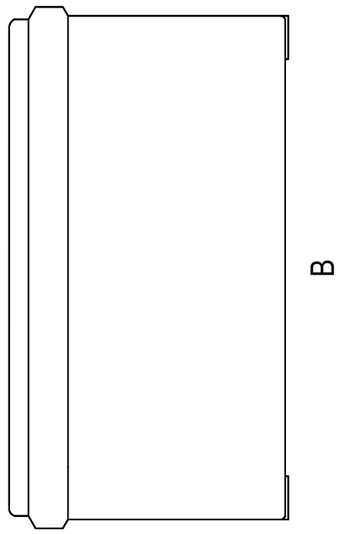

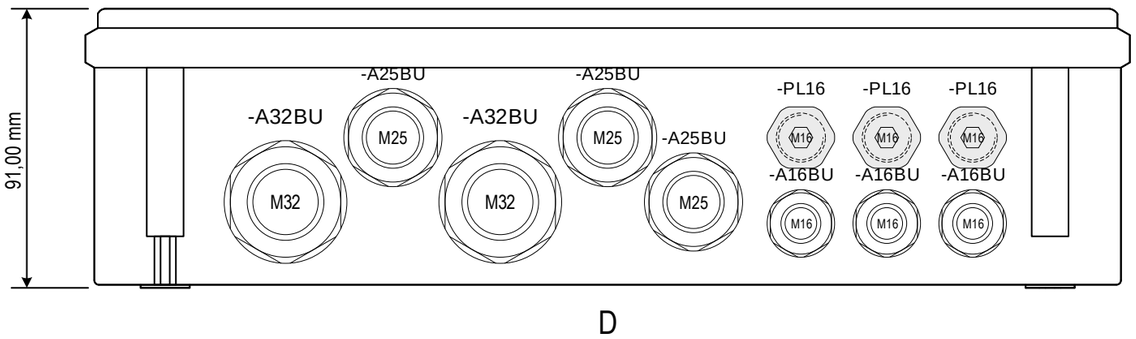

D

Type designation:	8146/2071
ATEX certificate:	PTB 01 ATEX 1016
ATEX Explosion protection:	II 2 G Ex ia ib IIC T6 Gb
IECEx certificate:	IECEx PTB 06.0046
IECEx Explosion protection:	Ex ia ib IIC T6 Gb
Further certificate:	NA
Further Explosion protection:	NA
PESO certificate:	NA
Degree of protection:	IP66
Ambient temperature:	Ta -20°C...+75°C
Rated Voltage:	60V
Connection cross-section	2,5mm²
Rated current	NA
Rated frequency:	NA
Material labels:	Polyester foil
Fixing labels:	Adhesive label
Nice label number:	138064

Index	Revision	Date	name
2	Final as built	19-3-2025	M.Besseling
1	For approval	13-11-2024	besselingmi

Drawn:	31-10-2024	elshofjo	
Engineer:	19-9-2024	besselingmi	
Approved:			
Changed:			

KANON LOADING EQUIPMENT B.V.

Ref: P242068, B242352 Quote:

Order: 2011280786 Item: 001000

KANON LOADING EQUIPMENT
www.kanon.nl

Electromach B.V.
Jan Tinbergenstraat 193
7559 SP Hengelo
The Netherlands
US

Layout
JB4. external

Int. Revision :	P242068A91
Drawing No.	+MLA-A-JB4A
2011280786-001000-24	Scale: 1 mm : 2 mm / A3
Refer to protection notice ISO 16016	Sheet: 54.1

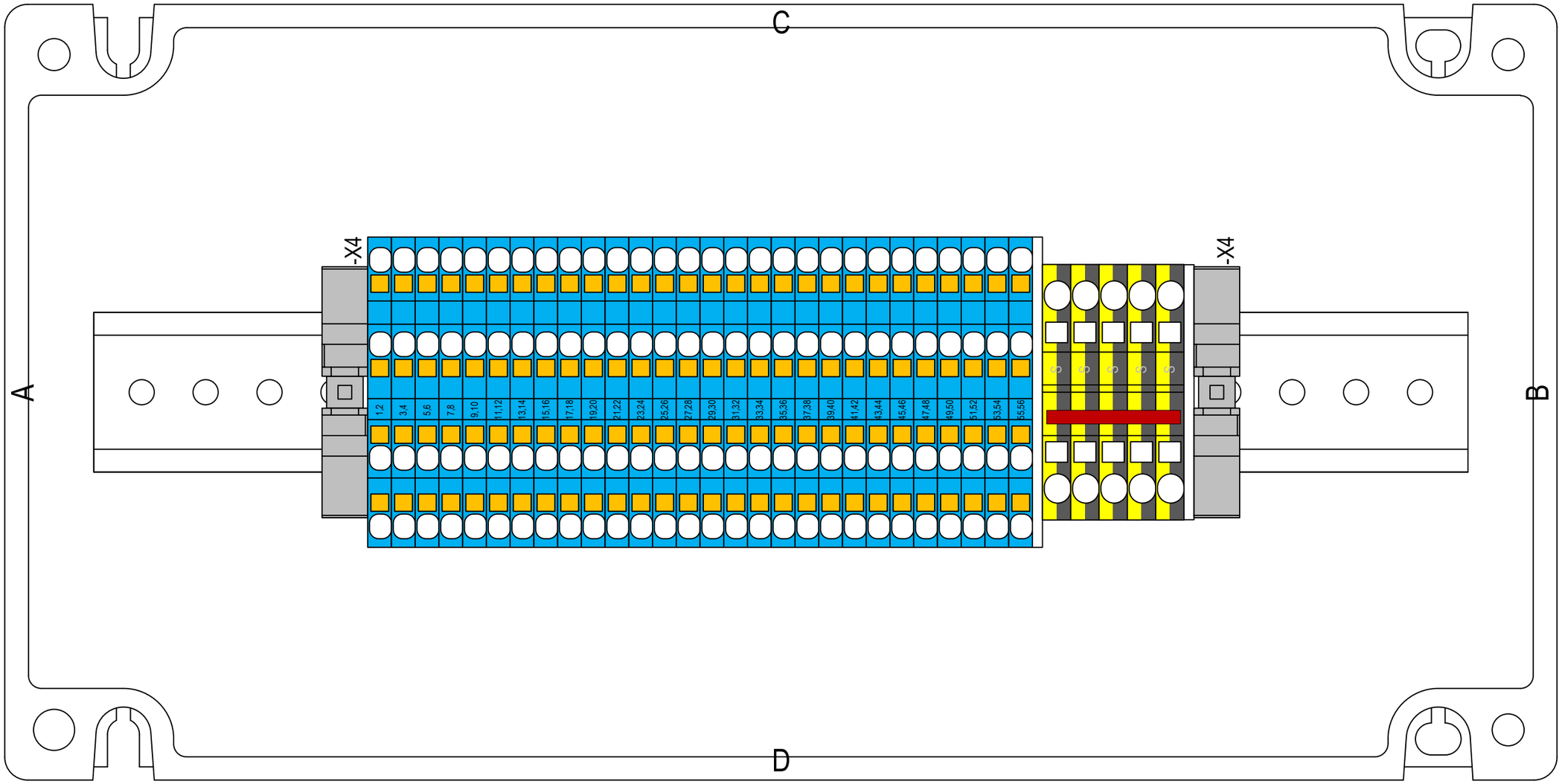

Index	Revision	Date	name			
2	Final as built	19-3-2025	M.Besseling	Drawn:	31-10-2024	elshofjo
1	For approval	13-11-2024	besselingmi	Engineer:	19-9-2024	besselingmi
				Approved:		
				Changed:		

KANON LOADING EQUIPMENT B.V.

Ref: P242068, B242352 Quote:

Order: 2011280786 Item: 001000

KANON LOADING EQUIPMENT

www.kanon.nl

Electromach B.V.
Jan Tinbergenstraat 193
7559 SP Hengelo
The Netherlands
US

Layout
JB4. internal

Int. Revision :	P242068A91
Drawing No.	+MLA-A-JB4A
2011280786-001000-24	Scale: 1 mm : 1 mm / A3
Refer to protection notice ISO 16016	Sheet: 54.2

Parts list

Row	Qty.	{}▲ SAP	Free issue	▲1 part of	▲2 name	▲3 Description	part number manufactu…	manufacturer
1	1	**286225**		+MLA-A -JB4A		8146A-071 Ex e empty enclosure Polyester resin Glass fibre reinforced		R. STAHL
2	1	**137983**		+MLA-A -JB4A		mounting rail TS35 in enclosure 8146 for terminals length: 301mm		R. STAHL
3	1	**229954**		+MLA-A -JB4A	-A16BU	8161/8-M16-0902 , 2 ... 9 mm Cable gland M16 , Polyamide Blue		R. STAHL
4	1	**110863**		+MLA-A -JB4A -A16BU		Nut M16x1,5 Ms nickel plated	10063142	WISKA
5	1	**229954**		+MLA-A -JB4A	-A16BU	8161/8-M16-0902 , 2 ... 9 mm Cable gland M16 , Polyamide Blue		R. STAHL
6	1	**110863**		+MLA-A -JB4A -A16BU		Nut M16x1,5 Ms nickel plated	10063142	WISKA
7	1	**229954**		+MLA-A -JB4A	-A16BU	8161/8-M16-0902 , 2 ... 9 mm Cable gland M16 , Polyamide Blue		R. STAHL
8	1	**110863**		+MLA-A -JB4A -A16BU		Nut M16x1,5 Ms nickel plated	10063142	WISKA
9	1	**229956**		+MLA-A -JB4A	-A25BU	8161/8-M25-1707 , 7 ... 17 mm Cable gland M25 , Polyamide Blue		R. STAHL
10	1	**110867**		+MLA-A -JB4A -A25BU		Nut M25x1,5 Ms nickel plated	10063144	WISKA
11	1	**229956**		+MLA-A -JB4A	-A25BU	8161/8-M25-1707 , 7 ... 17 mm Cable gland M25 , Polyamide Blue		R. STAHL
12	1	**110867**		+MLA-A -JB4A -A25BU		Nut M25x1,5 Ms nickel plated	10063144	WISKA
13	1	**229956**		+MLA-A -JB4A	-A25BU	8161/8-M25-1707 , 7 ... 17 mm Cable gland M25 , Polyamide Blue		R. STAHL
14	1	**110867**		+MLA-A -JB4A -A25BU		Nut M25x1,5 Ms nickel plated	10063144	WISKA
15	1	**229957**		+MLA-A -JB4A	-A32BU	8161/8-M32-2109 Cable gland M32 9 ... 21 mm Unarmoured cable types , Polyamide , Blue		R. STAHL
16	1	**110869**		+MLA-A -JB4A -A32BU		Nut M32x1,5 Ms nickel plated		WISKA
17	1	**229957**		+MLA-A -JB4A	-A32BU	8161/8-M32-2109 Cable gland M32 9 ... 21 mm Unarmoured cable types , Polyamide , Blue		R. STAHL
18	1	**110869**		+MLA-A -JB4A -A32BU		Nut M32x1,5 Ms nickel plated		WISKA
19	1	**245532**		+MLA-A -JB4A	-Ex label	Marking KDE 8146/2 ATEX/IEC		R. STAHL
20	1	**143554**		+MLA-A -JB4A	-PL16	8290/3-M16 Stopping plug M16 , Polyamide		R. STAHL
21	1	**110863**		+MLA-A -JB4A -PL16		Nut M16x1,5 Ms nickel plated	10063142	WISKA
22	1	**143554**		+MLA-A -JB4A	-PL16	8290/3-M16 Stopping plug M16 , Polyamide		R. STAHL
23	1	**110863**		+MLA-A -JB4A -PL16		Nut M16x1,5 Ms nickel plated	10063142	WISKA
24	1	**143554**		+MLA-A -JB4A	-PL16	8290/3-M16 Stopping plug M16 , Polyamide		R. STAHL
25	1	**110863**		+MLA-A -JB4A -PL16		Nut M16x1,5 Ms nickel plated	10063142	WISKA
26	1	**257784**		+MLA-A -JB4A -X4		End plate D-PTTB 2,5 Width : 2,200 mm, Grey	3211634	PHOENIX
27	1	**112921**		+MLA-A -JB4A -X4		End plate D-ST 4 Width : 2.200 mm, Grey	3030420	PHOENIX
28	1	**113072**		+MLA-A -JB4A -X4		Jumper FBS 5-6	3030349	PHOENIX
29	2	**112434**		+MLA-A -JB4A -X4		end bracket CLIPFIX 35	3022218	PHOENIX

Index	Revision	Date	name					
2	*Final as built*	*19-3-2025*	*M.Besseling*	Drawn:	*31-10-2024*	*elshofjo*		
2	*For approval*	*13-11-2024*	*besselingmi*	Engineer:	*19-9-2024*	*besselingmi*		
2				Approved:				
				Changed:				

KANON LOADING EQUIPMENT B.V.

Ref:	*P242068, B242352*	Quote:	
Order:	*2011280786*	Item:	*001000*

KANON LOADING EQUIPMENT

www.kanon.nl

Electromach BV
Jan Tinbergenstraat 193
7559 SP Hengelo
The Netherlands
US

Parts list
JB4.

Int. Revision :	*P242068A91*
Drawing No.:	*+MLA-A-JB4A*
2011280786-001000-24	Scale: *1 mm : 1 mm / A3*
Refer to protection notice ISO 16016	Sheet: *54.3* page *1 / 2*

Parts list

Row	Qty.	{}▲ SAP	Free issue	▲1 part of	▲2 name	▲3 Description	part number manufactu…	manufacturer
30	28	**257786**		+MLA-A -JB4A -X4	1,2, 3,4, 5,6, 7,8, 9,10, 11,12, 13,14, 15,16, 17,18, 19,20, 21,22, 23,24, 25,26, 27,28, 29,30, 31,32, 33,34, 35,36, 37,38, 39,40, 41,42, 43,44, 45,46, 47,48, 49,50, 51,52, 53,54, 55,56	PTTB 2,5 BU Multi-level terminal , Blue	3210570	PHOENIX
31	5	**319293**		+MLA-A -JB4A -X4	S	PT 4-FE terminal black-yellow	1077082	PHOENIX

Index	Revision	Date	name
2	Final as built	19-3-2025	M.Besseling
2	For approval	13-11-2024	besselingmi
2			

Drawn:	31-10-2024	elshofjo	
Engineer:	19-9-2024	besselingmi	
Approved:			
Changed:			

KANON LOADING EQUIPMENT B.V.

Ref:	P242068, B242352	Quote:	
Order:	2011280786	Item:	001000

KANON LOADING EQUIPMENT
www.kanon.nl

Electromach BV
Jan Tinbergenstraat 193
7559 SP Hengelo
The Netherlands
US

Parts list
JB4.

Int. Revision :	P242068A91
Drawing No.:	+MLA-A-JB4A
2011280786-001000-24	Scale: 1 mm : 1 mm / A3
Refer to protection notice ISO 16016	Sheet: 54.3 page 2 / 2

List of nameplates

Part of	Designation	Text 1	Text 2	Text 3	Material	Width	Height	Fixing	Char. Height	Backgr. Color	Letter Color
+MLA-A -JB4A		JB4A	P242068A10		plastic	41,00 mm	20,00 mm	screwed	5 / 3 mm	White	Black
+MLA-A -JB4A		JB4B	P242068B10		plastic	41,00 mm	20,00 mm	screwed	5 / 3 mm	White	Black

Index	Revision	Date	name
2	Final as built	19-3-2025	M.Besseling
2	For approval	13-11-2024	besselingmi
2			

Drawn:	31-10-2024	elshofjo
Engineer:	19-9-2024	besselingmi
Approved:		
Changed:		

KANON LOADING EQUIPMENT B.V.

Ref: P242068, B242352 Quote:

Order: 2011280786 Item: 001000

KANON LOADING EQUIPMENT

www.kanon.nl

Electromach BV
Jan Tinbergenstraat 193
7559 SP Hengelo
The Netherlands

List of nameplates
JB4.

Int. Revision :	P242068A91
Drawing No.: 2011280786-001000-24	+MLA-A-JB4A
Refer to protection notice ISO 16016	Scale: 1 mm : 1 mm / A3
	Sheet: 54.4 page 1 / 1

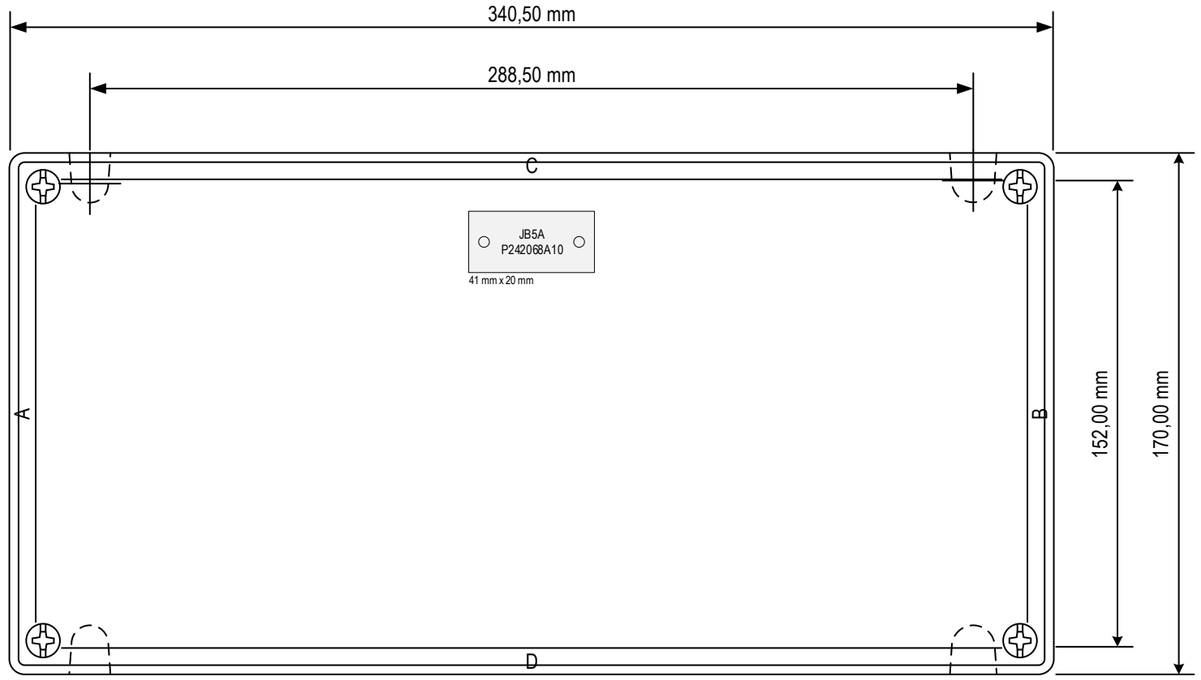

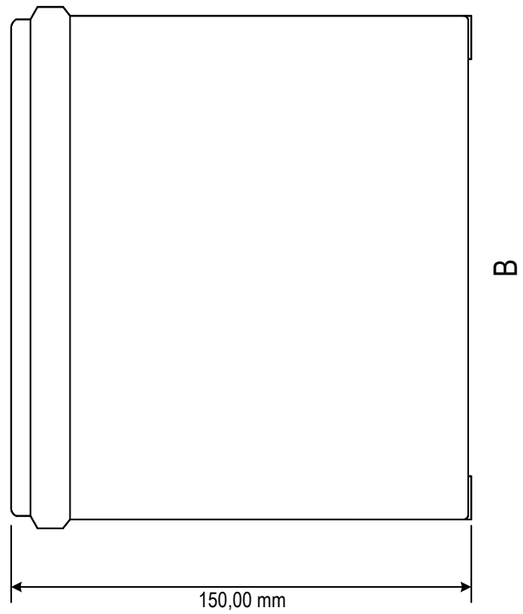

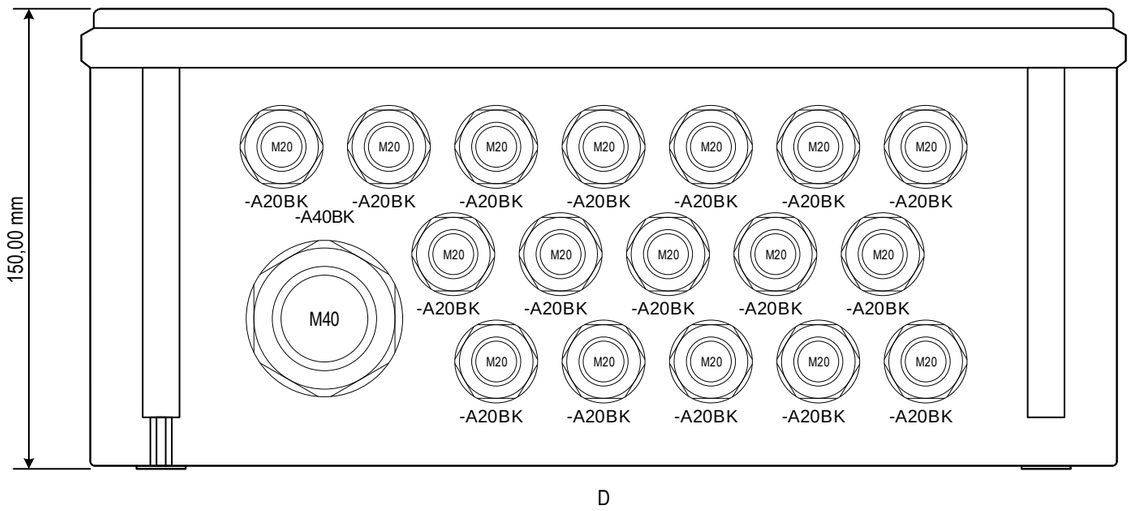

Type designation:	8146/1073
ATEX certificate:	PTB 01 ATEX 1016
ATEX Explosion protection:	II 2 G Ex eb IIC T5 Gb
IECEx certificate:	IECEx PTB 06.0046
IECEx Explosion protection:	Ex eb IIC T5 Gb
Further certificate:	NA
Further Explosion protection:	NA
PESO certificate:	NA
Degree of protection:	IP66
Ambient temperature:	Ta -20°C...+55°C
Rated Voltage:	352V
Connection cross-section	2,5mm²
Rated current	19A
Rated frequency:	NA
Material labels:	Polyester foil
Fixing labels:	Adhesive label
Nice label number:	138052

Index	Revision	Date	name							
2	Final as built	19-3-2025	M.Besseling	Drawn:	31-10-2024	elshofjo	**KANON LOADING EQUIPMENT B.V.**		**Electromach B.V.**	Layout
1	For approval	13-11-2024	besselingmi	Engineer:	19-9-2024	besselingmi			Jan Tinbergenstraat 193	JB5. external
				Approved:			Ref: P242068, B242352	Quote:	7559 SP Hengelo	
				Changed:			Order: 2011280786	Item: 001000	The Netherlands	

KANON LOADING EQUIPMENT
www.kanon.nl

Int. Revision :	P242068A91
Drawing No.	+MLA-A-JB5A
2011280786-001000-24	Scale: 1 mm : 2 mm / A3
Refer to protection notice ISO 16016	Sheet: 55.1

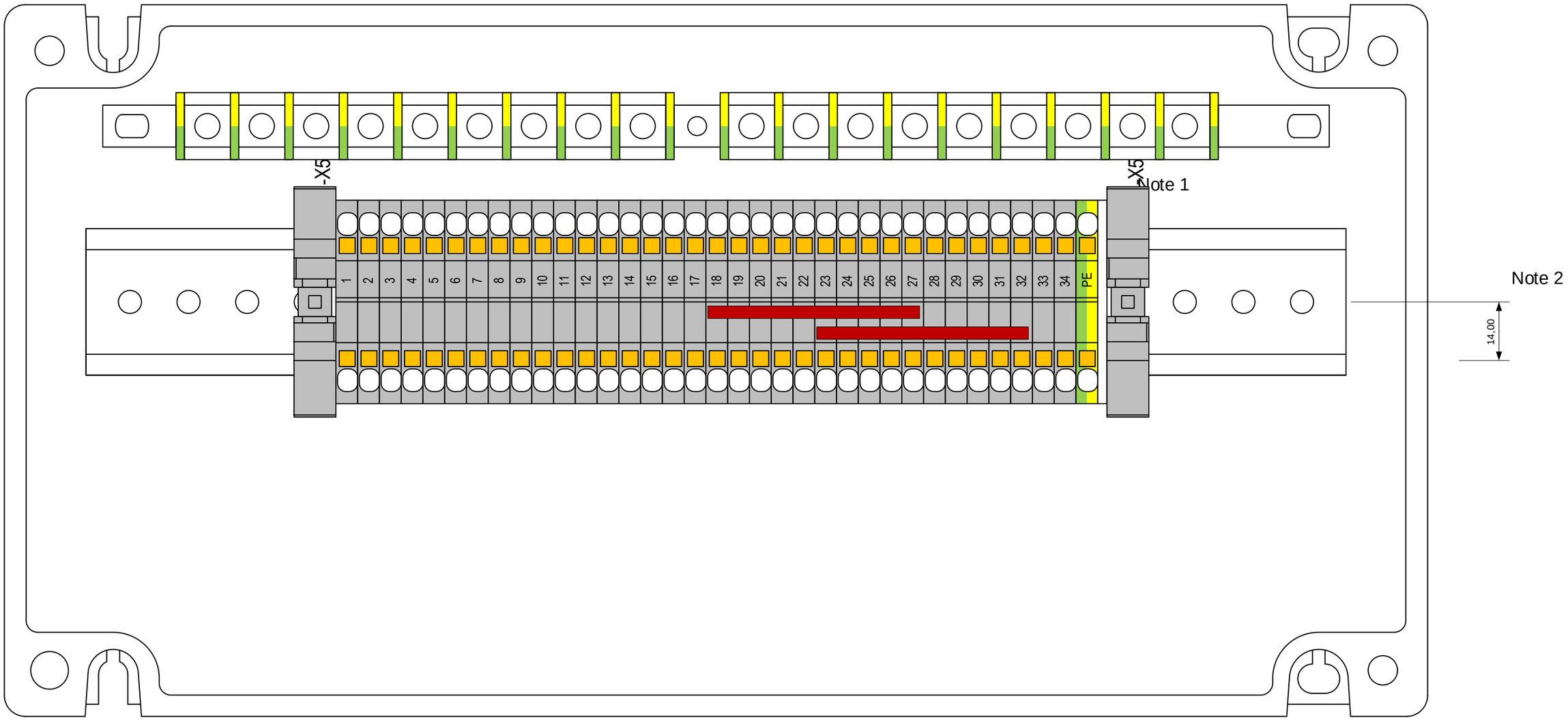

Note 1)
DIN-rail connected to earthbar via PE terminal, wired with green/yellow conductor 2,5 mm²

Note 2)
Terminal row mounted 14 mm above center of the box and 40mm raised.

Index	Revision	Date	name
2	Final as built	19-3-2025	M.Besseling
1	For approval	13-11-2024	besselingmi

Drawn:	31-10-2024	elshofjo	
Engineer:	19-9-2024	besselingmi	
Approved:			
Changed:			

KANON LOADING EQUIPMENT B.V.

Ref: P242068, B242352 Quote:
Order: 2011280786 Item: 001000

KANON LOADING EQUIPMENT
www.kanon.nl

Electromach B.V.
Jan Tinbergenstraat 193
7559 SP Hengelo
The Netherlands
US

Layout
JB5. internal

Int. Revision :	P242068A91
Drawing No.	+MLA-A-JB5A
2011280786-001000-24	Scale: 1 mm : 1 mm / A3
Refer to protection notice ISO 16016	Sheet: 55.2

Parts list

Row	Qty.	{}▲ SAP	Free issue	▲1 part of	▲2 name	▲3 Description	part number manufactu…	manufacturer
1	1	**286227**		+MLA-A -JB5A		8146A-073 Empty enclosure Ex e Polyester resin Glass fibre reinforced		R. STAHL
2	1	**136640**		+MLA-A -JB5A		Earthing rail , 18x4 mm2 copper Uncoated , 8146		R. STAHL
3	1	**137983**		+MLA-A -JB5A		mounting rail TS35 in enclosure 8146 for terminals length: 301mm		R. STAHL
4	1	**229917**		+MLA-A -JB5A	-A20BK	8161/7-M20-1304 , 4 ... 13 mm Cable gland M20 , Polyamide Black		R. STAHL
5	1	**110865**		+MLA-A -JB5A -A20BK		Nut M20x1,5 Ms nickel plated	10063143	WISKA
6	1	**229917**		+MLA-A -JB5A	-A20BK	8161/7-M20-1304 , 4 ... 13 mm Cable gland M20 , Polyamide Black		R. STAHL
7	1	**110865**		+MLA-A -JB5A -A20BK		Nut M20x1,5 Ms nickel plated	10063143	WISKA
8	1	**229917**		+MLA-A -JB5A	-A20BK	8161/7-M20-1304 , 4 ... 13 mm Cable gland M20 , Polyamide Black		R. STAHL
9	1	**110865**		+MLA-A -JB5A -A20BK		Nut M20x1,5 Ms nickel plated	10063143	WISKA
10	1	**229917**		+MLA-A -JB5A	-A20BK	8161/7-M20-1304 , 4 ... 13 mm Cable gland M20 , Polyamide Black		R. STAHL
11	1	**110865**		+MLA-A -JB5A -A20BK		Nut M20x1,5 Ms nickel plated	10063143	WISKA
12	1	**229917**		+MLA-A -JB5A	-A20BK	8161/7-M20-1304 , 4 ... 13 mm Cable gland M20 , Polyamide Black		R. STAHL
13	1	**110865**		+MLA-A -JB5A -A20BK		Nut M20x1,5 Ms nickel plated	10063143	WISKA
14	1	**229917**		+MLA-A -JB5A	-A20BK	8161/7-M20-1304 , 4 ... 13 mm Cable gland M20 , Polyamide Black		R. STAHL
15	1	**110865**		+MLA-A -JB5A -A20BK		Nut M20x1,5 Ms nickel plated	10063143	WISKA
16	1	**229917**		+MLA-A -JB5A	-A20BK	8161/7-M20-1304 , 4 ... 13 mm Cable gland M20 , Polyamide Black		R. STAHL
17	1	**110865**		+MLA-A -JB5A -A20BK		Nut M20x1,5 Ms nickel plated	10063143	WISKA
18	1	**229917**		+MLA-A -JB5A	-A20BK	8161/7-M20-1304 , 4 ... 13 mm Cable gland M20 , Polyamide Black		R. STAHL
19	1	**110865**		+MLA-A -JB5A -A20BK		Nut M20x1,5 Ms nickel plated	10063143	WISKA
20	1	**229917**		+MLA-A -JB5A	-A20BK	8161/7-M20-1304 , 4 ... 13 mm Cable gland M20 , Polyamide Black		R. STAHL
21	1	**110865**		+MLA-A -JB5A -A20BK		Nut M20x1,5 Ms nickel plated	10063143	WISKA
22	1	**229917**		+MLA-A -JB5A	-A20BK	8161/7-M20-1304 , 4 ... 13 mm Cable gland M20 , Polyamide Black		R. STAHL
23	1	**110865**		+MLA-A -JB5A -A20BK		Nut M20x1,5 Ms nickel plated	10063143	WISKA
24	1	**229917**		+MLA-A -JB5A	-A20BK	8161/7-M20-1304 , 4 ... 13 mm Cable gland M20 , Polyamide Black		R. STAHL
25	1	**110865**		+MLA-A -JB5A -A20BK		Nut M20x1,5 Ms nickel plated	10063143	WISKA
26	1	**229917**		+MLA-A -JB5A	-A20BK	8161/7-M20-1304 , 4 ... 13 mm Cable gland M20 , Polyamide Black		R. STAHL
27	1	**110865**		+MLA-A -JB5A -A20BK		Nut M20x1,5 Ms nickel plated	10063143	WISKA
28	1	**229917**		+MLA-A -JB5A	-A20BK	8161/7-M20-1304 , 4 ... 13 mm Cable gland M20 , Polyamide Black		R. STAHL
29	1	**110865**		+MLA-A -JB5A -A20BK		Nut M20x1,5 Ms nickel plated	10063143	WISKA
30	1	**229917**		+MLA-A -JB5A	-A20BK	8161/7-M20-1304 , 4 ... 13 mm Cable gland M20 , Polyamide Black		R. STAHL
31	1	**110865**		+MLA-A -JB5A -A20BK		Nut M20x1,5 Ms nickel plated	10063143	WISKA
32	1	**229917**		+MLA-A -JB5A	-A20BK	8161/7-M20-1304 , 4 ... 13 mm Cable gland M20 , Polyamide Black		R. STAHL
33	1	**110865**		+MLA-A -JB5A -A20BK		Nut M20x1,5 Ms nickel plated	10063143	WISKA
34	1	**229917**		+MLA-A -JB5A	-A20BK	8161/7-M20-1304 , 4 ... 13 mm Cable gland M20 , Polyamide Black		R. STAHL
35	1	**110865**		+MLA-A -JB5A -A20BK		Nut M20x1,5 Ms nickel plated	10063143	WISKA
36	1	**229917**		+MLA-A -JB5A	-A20BK	8161/7-M20-1304 , 4 ... 13 mm Cable gland M20 , Polyamide Black		R. STAHL
37	1	**110865**		+MLA-A -JB5A -A20BK		Nut M20x1,5 Ms nickel plated	10063143	WISKA
38	1	**229920**		+MLA-A -JB5A	-A40BK	8161/7-M40-2812 Cable gland M40 12 ... 28 mm Unarmoured cable types , Polyamide , Black		R. STAHL
39	1	**110871**		+MLA-A -JB5A -A40BK		Nut M40x1,5 Ms nickel plated	10063146	WISKA

Index	Revision	Date	name
2	*Final as built*	*19-3-2025*	*M.Besseling*
2	*For approval*	*13-11-2024*	*besselingmi*
2			

Drawn:	*31-10-2024*	*elshofjo*	
Engineer:	*19-9-2024*	*besselingmi*	
Approved:			
Changed:			

KANON LOADING EQUIPMENT B.V.

Ref:	*P242068, B242352*	Quote:	
Order:	*2011280786*	Item:	*001000*

KANON LOADING EQUIPMENT

www.kanon.nl

Electromach BV
Jan Tinbergenstraat 193
7559 SP Hengelo
The Netherlands
US

Parts list
JB5.

Int. Revision :	*P242068A91*
Drawing No.:	*+MLA-A-JB5A*
2011280786-001000-24	Scale: *1 mm : 1 mm / A3*
Refer to protection notice ISO 16016	Sheet: *55.3* page *1 / 2*

Parts list

Row	Qty.	{}▲ SAP	Free issue	▲1 part of	▲2 name	▲3 Description	part number manufactu…	manufacturer
40	1	**245531**		+MLA-A -JB5A	-Ex label	Marking KDE 8146/1 ATEX/IEC		R. STAHL
41	1	**112591**		+MLA-A -JB5A -X5		Cover D-ST 2,5	3030417	PHOENIX
42	2	**113069**		+MLA-A -JB5A -X5		Jumper FBS 10-5	3030213	PHOENIX
43	2	**112434**		+MLA-A -JB5A -X5		end bracket CLIPFIX 35	3022218	PHOENIX
44	34	**219442**		+MLA-A -JB5A -X5	1...34	PT 2,5 Terminal block , Grey	3209510	PHOENIX
45	1	**257740**		+MLA-A -JB5A -X5	PE	PT 2,5-PE Protective conductor terminal , Green-yellow	3209536	PHOENIX

Index	Revision	Date	name							
2	Final as built	19-3-2025	M.Besseling	Drawn:	31-10-2024	elshofjo	**KANON LOADING EQUIPMENT B.V.**			
2	For approval	13-11-2024	besselingmi	Engineer:	19-9-2024	besselingmi				
2				Approved:			Ref: P242068, B242352	Quote:		
				Changed:			Order: 2011280786	Item: 001000		

KANON LOADING EQUIPMENT
www.kanon.nl

Electromach BV
Jan Tinbergenstraat 193
7559 SP Hengelo
The Netherlands

Parts list
JB5.

Int. Revision :	P242068A91
Drawing No.:	+MLA-A-JB5A
2011280786-001000-24	Scale: 1 mm : 1 mm / A3
Refer to protection notice ISO 16016	Sheet: 55.3 page 2 / 2

List of nameplates

Part of	Designation	Text 1	Text 2	Text 3	Material	Width	Height	Fixing	Char. Height	Backgr. Color	Letter Color
+MLA-A -JB5A		JB5A	P242068A10		plastic	41,00 mm	20,00 mm	screwed	5 / 3 mm	White	Black
+MLA-A -JB5A		JB5B	P242068B10		plastic	41,00 mm	20,00 mm	screwed	5 / 3 mm	White	Black

Index	Revision	Date	name			
2	Final as built	19-3-2025	M.Besseling	Drawn:	31-10-2024	elshofjo
2	For approval	13-11-2024	besselingmi	Engineer:	19-9-2024	besselingmi
2				Approved:		
				Changed:		

KANON LOADING EQUIPMENT B.V.

Ref: P242068, B242352 Quote:

Order: 2011280786 Item: 001000

KANON LOADING EQUIPMENT

www.kanon.nl

Electromach BV
Jan Tinbergenstraat 193
7559 SP Hengelo
The Netherlands
US

List of nameplates
JB5.

Int. Revision :
Drawing No.:
2011280786-001000-24
Refer to protection notice ISO 16016

P242068A91
+MLA-A-JB5A
Scale: 1 mm : 1 mm / A3
Sheet: 55.4 page 1 / 1

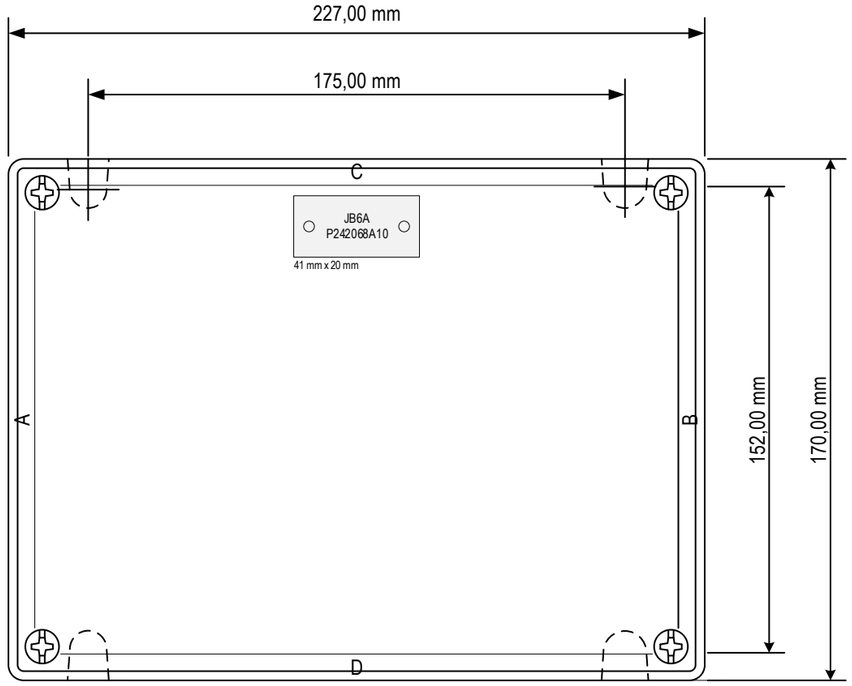

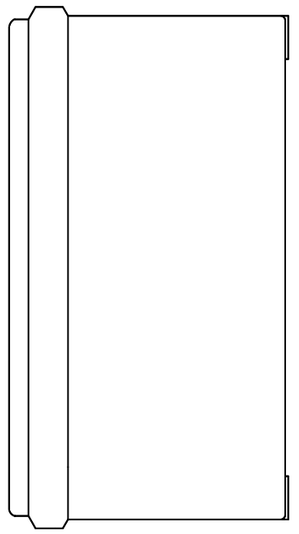

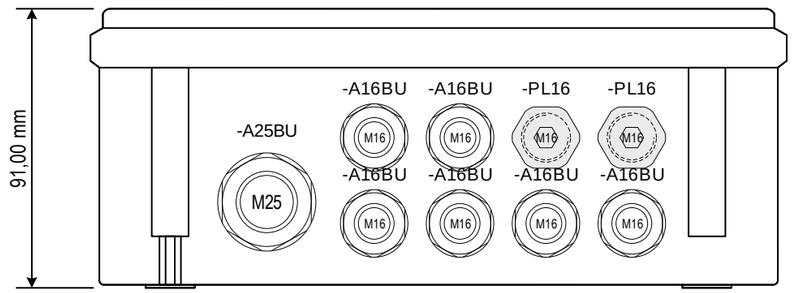

D

2	*Final as built*	*19-3-2025*	*M.Besseling*	Drawn:	*31-10-2024*	*elshofjo*	***KANON LOADING EQUIPMENT B.V.***		KANON LOADING EQUIPMENT *www.kanon.nl*	***Electromach B.V.*** *Jan Tinbergenstraat 193* *7559 SP Hengelo* *The Netherlands* US	Layout JB6. external	Int. Revision :	*P242068A91*
1	*For approval*	*13-11-2024*	*besselingmi*	Engineer:	*19-9-2024*	*besselingmi*						Drawing No.	*+MLA-A-JB6A*
				Approved:			Ref: *P242068, B242352*	Quote:				*2011280786-001000-24*	Scale: *1 mm : 2 mm / A3*
Index	Revision	Date	name	Changed:			Order: *2011280786*	Item: *001000*				Refer to protection notice ISO 16016	Sheet: *56.1*

Type designation:	8146/2061
ATEX certificate:	PTB 01 ATEX 1016
ATEX Explosion protection:	II 2 G Ex ia ib IIC T6 Gb
IECEx certificate:	IECEx PTB 06.0046
IECEx Explosion protection:	Ex ia ib IIC T6 Gb
Further certificate:	NA
Further Explosion protection:	NA
PESO certificate:	NA
Degree of protection:	IP66
Ambient temperature:	Ta -20°C...+75°C
Rated Voltage:	60V
Connection cross-section	2,5mm²
Rated current	NA
Rated frequency:	NA
Material labels:	Polyester foil
Fixing labels:	Adhesive label
Nice label number:	138064

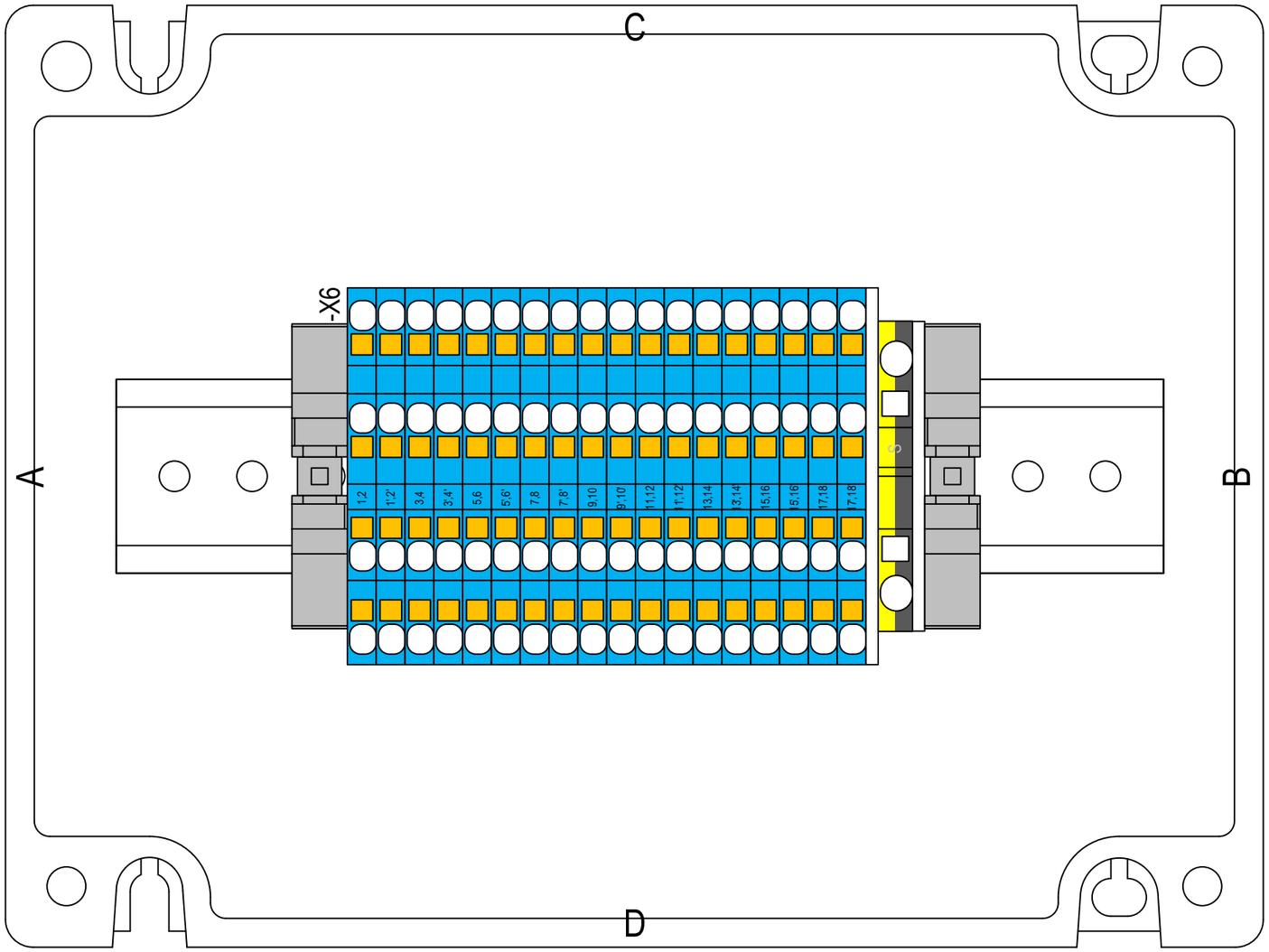

Index	Revision	Date	name
2	Final as built	19-3-2025	M.Besseling
1	For approval	13-11-2024	besselingmi

Drawn:	31-10-2024	elshofjo
Engineer:	19-9-2024	besselingmi
Approved:		
Changed:		

KANON LOADING EQUIPMENT B.V.

Ref:	P242068, B242352	Quote:	
Order:	2011280786	Item:	001000

KANON LOADING EQUIPMENT
www.kanon.nl

Electromach B.V.
Jan Tinbergenstraat 193
7559 SP Hengelo
The Netherlands

Layout
JB6. internal

Int. Revision :	P242068A91
Drawing No.	+MLA-A-JB6A
2011280786-001000-24	Scale: 1 mm : 1 mm / A3
Refer to protection notice ISO 16016	Sheet: 56.2

Parts list

Row	Qty.	{}▲ SAP	Free issue	▲1 part of	▲2 name	▲3 Description	part number manufactu…	manufacturer
1	1	**286223**		+MLA-A -JB6A		8146A-061 Empty enclosure Ex e Polyester resin Glass fibre reinforced		R. STAHL
2	1	**137976**		+MLA-A -JB6A		mounting rail TS35 in enclosure 8146 for terminals length: 189mm		R. STAHL
3	1	**229954**		+MLA-A -JB6A	-A16BU	8161/8-M16-0902 , 2 ... 9 mm Cable gland M16 , Polyamide Blue		R. STAHL
4	1	**110863**		+MLA-A -JB6A -A16BU		Nut M16x1,5 Ms nickel plated	10063142	WISKA
5	1	**229954**		+MLA-A -JB6A	-A16BU	8161/8-M16-0902 , 2 ... 9 mm Cable gland M16 , Polyamide Blue		R. STAHL
6	1	**110863**		+MLA-A -JB6A -A16BU		Nut M16x1,5 Ms nickel plated	10063142	WISKA
7	1	**229954**		+MLA-A -JB6A	-A16BU	8161/8-M16-0902 , 2 ... 9 mm Cable gland M16 , Polyamide Blue		R. STAHL
8	1	**110863**		+MLA-A -JB6A -A16BU		Nut M16x1,5 Ms nickel plated	10063142	WISKA
9	1	**229954**		+MLA-A -JB6A	-A16BU	8161/8-M16-0902 , 2 ... 9 mm Cable gland M16 , Polyamide Blue		R. STAHL
10	1	**110863**		+MLA-A -JB6A -A16BU		Nut M16x1,5 Ms nickel plated	10063142	WISKA
11	1	**229954**		+MLA-A -JB6A	-A16BU	8161/8-M16-0902 , 2 ... 9 mm Cable gland M16 , Polyamide Blue		R. STAHL
12	1	**110863**		+MLA-A -JB6A -A16BU		Nut M16x1,5 Ms nickel plated	10063142	WISKA
13	1	**229954**		+MLA-A -JB6A	-A16BU	8161/8-M16-0902 , 2 ... 9 mm Cable gland M16 , Polyamide Blue		R. STAHL
14	1	**110863**		+MLA-A -JB6A -A16BU		Nut M16x1,5 Ms nickel plated	10063142	WISKA
15	1	**229956**		+MLA-A -JB6A	-A25BU	8161/8-M25-1707 Cable gland M25 7 ... 17 mm Unarmoured cable types , Polyamide , Blue		R. STAHL
16	1	**110867**		+MLA-A -JB6A -A25BU		Nut M25x1,5 Ms nickel plated	10063144	WISKA
17	1	**245531**		+MLA-A -JB6A	-Ex label	Marking KDE 8146/1 ATEX/IEC		R. STAHL
18	1	**143554**		+MLA-A -JB6A	-PL16	8290/3-M16 Stopping plug M16 , Polyamide		R. STAHL
19	1	**110863**		+MLA-A -JB6A -PL16		Nut M16x1,5 Ms nickel plated	10063142	WISKA
20	1	**143554**		+MLA-A -JB6A	-PL16	8290/3-M16 Stopping plug M16 , Polyamide		R. STAHL
21	1	**110863**		+MLA-A -JB6A -PL16		Nut M16x1,5 Ms nickel plated	10063142	WISKA
22	1	**257784**		+MLA-A -JB6A -X6		End plate D-PTTB 2,5 Width : 2,200 mm, Grey	3211634	PHOENIX
23	1	**112921**		+MLA-A -JB6A -X6		End plate D-ST 4 Width : 2.200 mm, Grey	3030420	PHOENIX
24	2	**112434**		+MLA-A -JB6A -X6		end bracket CLIPFIX 35	3022218	PHOENIX
25	18	**257786**		+MLA-A -JB6A -X6	1',2', 1,2, 3',4', 3,4, 5',6', 5,6, 7',8', 7,8, 9',10', 9,10, 11',12', 11,12, 13',14', 13,14, 15',16', 15,16, 17',18', 17,18	PTTB 2,5 BU Multi-level terminal , Blue	3210570	PHOENIX
26	1	**319293**		+MLA-A -JB6A -X6	S	PT 4-FE terminal black-yellow	1077082	PHOENIX

Index	Revision	Date	name					
2	Final as built	19-3-2025	M.Besseling	Drawn:	31-10-2024	elshofjo	**KANON LOADING EQUIPMENT B.V.**	
2	For approval	13-11-2024	besselingmi	Engineer:	19-9-2024	besselingmi		
2				Approved:			Ref: P242068, B242352	Quote:
				Changed:			Order: 2011280786	Item: 001000

KANON LOADING EQUIPMENT
www.kanon.nl

Electromach BV
Jan Tinbergenstraat 193
7559 SP Hengelo
The Netherlands
US

Parts list
JB6.

Int. Revision :	P242068A91
Drawing No.: 2011280786-001000-24	+MLA-A-JB6A
	Scale: 1 mm : 1 mm / A3
Refer to protection notice ISO 16016	Sheet: 56.3 page 1 / 1

List of nameplates

Part of	Designation	Text 1	Text 2	Text 3	Material	Width	Height	Fixing	Char. Height	Backgr. Color	Letter Color
+MLA-A -JB6A		JB6A	P242068A10		plastic	41,00 mm	20,00 mm	screwed	5 / 3 mm	White	Black
+MLA-A -JB6A		JB6B	P242068B10		plastic	41,00 mm	20,00 mm	screwed	5 / 3 mm	White	Black

Index	Revision	Date	name					
2	Final as built	19-3-2025	M.Besseling	Drawn:	31-10-2024	elshofjo	KANON LOADING EQUIPMENT B.V.	
2	For approval	13-11-2024	besselingmi	Engineer:	19-9-2024	besselingmi		
2				Approved:			Ref: P242068, B242352	Quote:
				Changed:			Order: 2011280786	Item: 001000

KANON LOADING EQUIPMENT
www.kanon.nl

Electromach BV
Jan Tinbergenstraat 193
7559 SP Hengelo
The Netherlands
US

List of nameplates
JB6.

Int. Revision :	P242068A91
Drawing No.: 2011280786-001000-24	+MLA-A-JB6A
Refer to protection notice ISO 16016	Scale: 1 mm : 1 mm / A3
	Sheet: 56.4 page 1 / 1

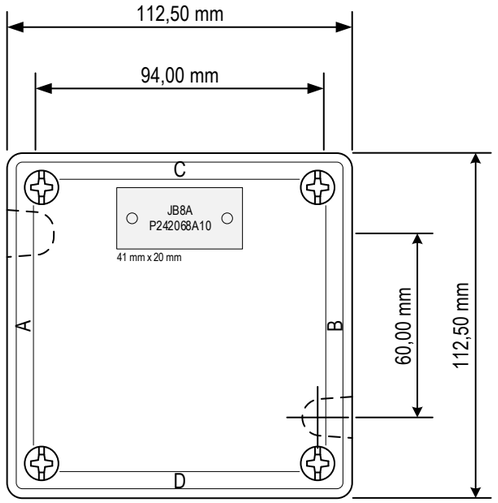

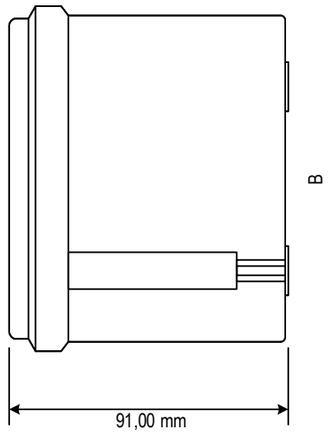

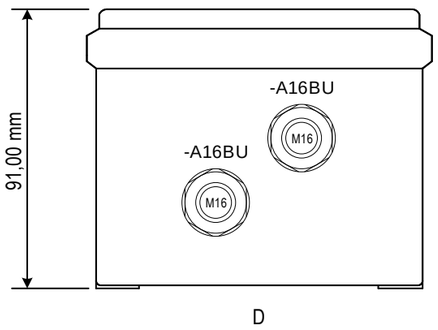

Type designation:	8146/2031
ATEX certificate:	PTB 01 ATEX 1016
ATEX Explosion protection:	II 2 G Ex ia ib IIC T6 Gb
IECEx certificate:	IECEx PTB 06.0046
IECEx Explosion protection:	Ex ia ib IIC T6 Gb
Further certificate:	NA
Further Explosion protection:	NA
PESO certificate:	NA
Degree of protection:	IP66
Ambient temperature:	Ta -20°C...+75°C
Rated Voltage:	60V
Connection cross-section	2,5mm²
Rated current	NA
Rated frequency:	NA
Material labels:	Polyester foil
Fixing labels:	Adhesive label
Nice label number:	138064

Index	Revision	Date	name			
2	Final as built	19-3-2025	M.Besseling	Drawn:	31-10-2024	elshofjo
1	For approval	13-11-2024	besselingmi	Engineer:	19-9-2024	besselingmi
				Approved:		
				Changed:		

KANON LOADING EQUIPMENT B.V.

Ref: P242068, B242352 Quote:

Order: 2011280786 Item: 001000

KANON LOADING EQUIPMENT
www.kanon.nl

Electromach B.V.
Jan Tinbergenstraat 193
7559 SP Hengelo
The Netherlands
US

Layout
JB8. external

Int. Revision :	P242068A91
Drawing No.	+MLA-A-JB8A
2011280786-001000-24	Scale: 1 mm : 2 mm / A3
Refer to protection notice ISO 16016	Sheet: 58.1

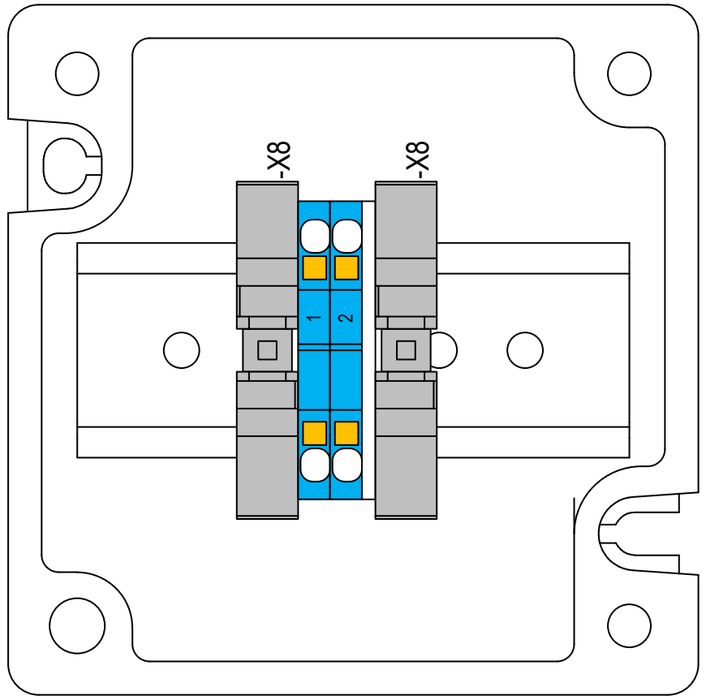

Index	Revision	Date	name			
2	Final as built	19-3-2025	M.Besseling	Drawn:	31-10-2024	elshofjo
1	For approval	13-11-2024	besselingmi	Engineer:	19-9-2024	besselingmi
				Approved:		
				Changed:		

KANON LOADING EQUIPMENT B.V.

Ref: P242068, B242352 Quote:

Order: 2011280786 Item: 001000

KANON LOADING EQUIPMENT

www.kanon.nl

Electromach B.V.
Jan Tinbergenstraat 193
7559 SP Hengelo
The Netherlands
US

Layout
JB8. internal

Int. Revision :	P242068A91
Drawing No.	+MLA-A-JB8A
2011280786-001000-24	Scale: 1 mm : 1 mm / A3
Refer to protection notice ISO 16016	Sheet: 58.2

Parts list

Row	qty.	{}▲ material	Free issue	▲1 part of	▲2 name	▲3 sales text	part number manufacturer	manufacturer
1	1	**286137**		+MLA-A -JB8A		8146A-031 Empty enclosure Ex e Polyester resin Glass fibre reinforced		R. STAHL
2	1	**138002**		+MLA-A -JB8A		mounting rail TS35 in enclosure 8146 for terminals length: 90mm		R. STAHL
3	1	**229954**		+MLA-A -JB8A	-A16BU	8161/8-M16-0902 , 2 ... 9 mm Cable gland M16 , Polyamide Blue		R. STAHL
4	1	**110863**		+MLA-A -JB8A -A16BU		Nut M16x1,5 Ms nickel plated	10063142	WISKA
5	1	**229954**		+MLA-A -JB8A	-A16BU	8161/8-M16-0902 , 2 ... 9 mm Cable gland M16 , Polyamide Blue		R. STAHL
6	1	**110863**		+MLA-A -JB8A -A16BU		Nut M16x1,5 Ms nickel plated	10063142	WISKA
7	1	**245532**		+MLA-A -JB8A	-Ex label	Marking KDE 8146/2 ATEX/IEC		R. STAHL
8	1	**112591**		+MLA-A -JB8A -X8		Cover D-ST 2,5	3030417	PHOENIX
9	2	**112434**		+MLA-A -JB8A -X8		end bracket CLIPFIX 35	3022218	PHOENIX
10	2	**257739**		+MLA-A -JB8A -X8	1, 2	PT 2,5 BU Terminal block , Blue	3209523	PHOENIX

Index	Revision	Date	name						
2	Final as built	19-3-2025	M.Besseling	Drawn:	31-10-2024	elshofjo	**KANON LOADING EQUIPMENT B.V.**		
2	For approval	13-11-2024	besselingmi	Engineer:	19-9-2024	besselingmi			
2				Approved:			Ref: P242068, B242352	Quote:	
				Changed:			Order: 2011280786	Item: 001000	

KANON LOADING EQUIPMENT
www.kanon.nl

Electromach BV
Jan Tinbergenstraat 193
7559 SP Hengelo
The Netherlands
US

Parts list
JB8.

Int. Revision :	P242068A91
Drawing No.: 2011280786-001000-24	+MLA-A-JB8A
Refer to protection notice ISO 16016	Scale: 1 mm : 1 mm / A3
	Sheet: 58.3 page 1 / 1

List of nameplates

Part of	Text 1	Text 2	Text 3	Material	Width	Height	Fixing	Char. Height	Backgr. Color	Letter Color
+MLA-A -JB8A	JB8A	P242068A10		plastic	41,00 mm	20,00 mm	screwed	5 / 3 mm	White	Black
+MLA-A -JB8A	JB8B	P242068B10		plastic	41,00 mm	20,00 mm	screwed	5 / 3 mm	White	Black

2	Final as built	19-3-2025	M.Besseling	Drawn:	31-10-2024	elshofjo	**KANON LOADING EQUIPMENT B.V.**			
2	For approval	13-11-2024	besselingmi	Engineer:	19-9-2024	besselingmi				
2				Approved:			Ref: P242068, B242352	Quote:		
Index	Revision	Date	name	Changed:			Order: 2011280786	Item: 001000		

KANON LOADING EQUIPMENT
www.kanon.nl

Electromach BV
Jan Tinbergenstraat 193
7559 SP Hengelo
The Netherlands
US

List of nameplates
JB8.

Int. Revision :	P242068A91
Drawing No.: 2011280786-001000-24	+MLA-A-JB8A
Refer to protection notice ISO 16016	Scale: 1 mm : 1 mm / A3
	Sheet: 58.4 page 1 / 1

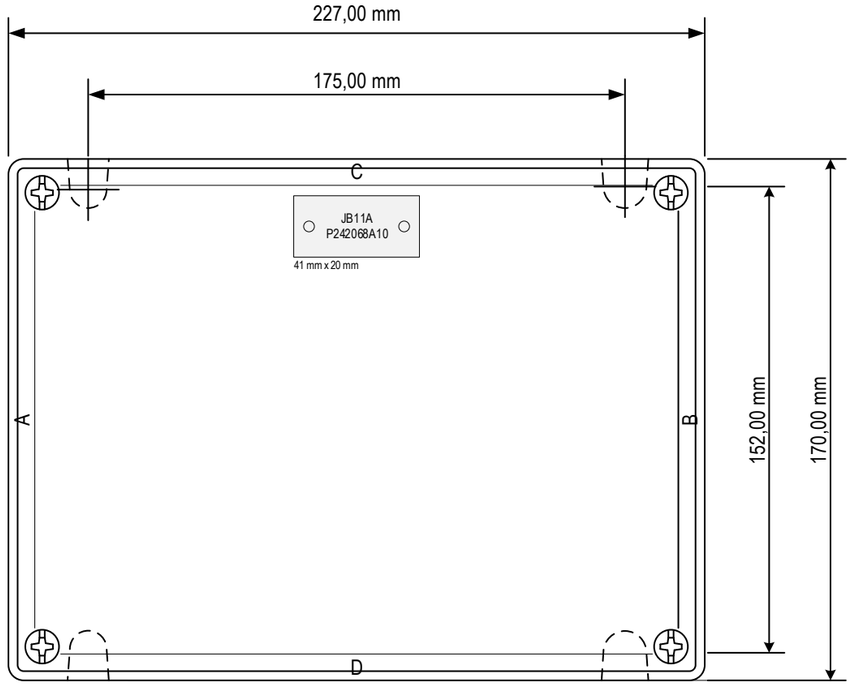

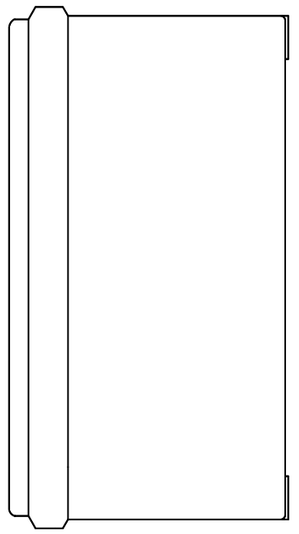

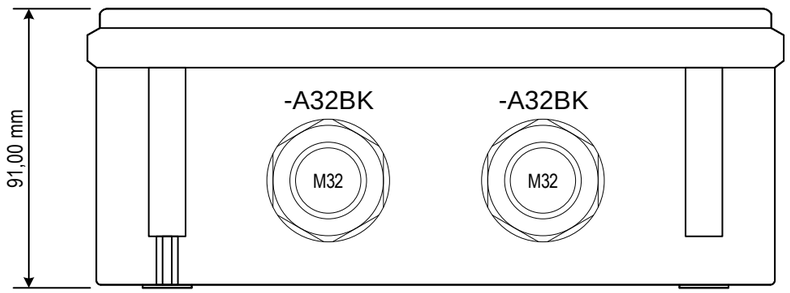

Type designation:	8146/1061
ATEX certificate:	PTB 01 ATEX 1016
ATEX Explosion protection:	II 2 G Ex eb IIC T5 Gb
IECEx certificate:	IECEx PTB 06.0046
IECEx Explosion protection:	Ex eb IIC T5 Gb
Further certificate:	NA
Further Explosion protection:	NA
PESO certificate:	NA
Degree of protection:	IP66
Ambient temperature:	Ta -20°C...+55°C
Rated Voltage:	352V
Connection cross-section	2,5mm²
Rated current	19A
Rated frequency:	NA
Material labels:	Polyester foil
Fixing labels:	Adhesive label
Nice label number:	138052

Index	Revision	Date	name							
2	Final as built	19-3-2025	M.Besseling	Drawn:	31-10-2024	elshofjo	**KANON LOADING EQUIPMENT B.V.**		Layout JB11. external	Int. Revision : P242068A91
1	For approval	13-11-2024	besselingmi	Engineer:	19-9-2024	besselingmi				Drawing No. +MLA-A-JB11A
				Approved:			Ref: P242068, B242352	Quote:		2011280786-001000-24 Scale: 1 mm : 2 mm / A3
				Changed:			Order: 2011280786	Item: 001000		Refer to protection notice ISO 16016 Sheet: 61.1

KANON LOADING EQUIPMENT
www.kanon.nl

Electromach B.V.
Jan Tinbergenstraat 193
7559 SP Hengelo
The Netherlands
US

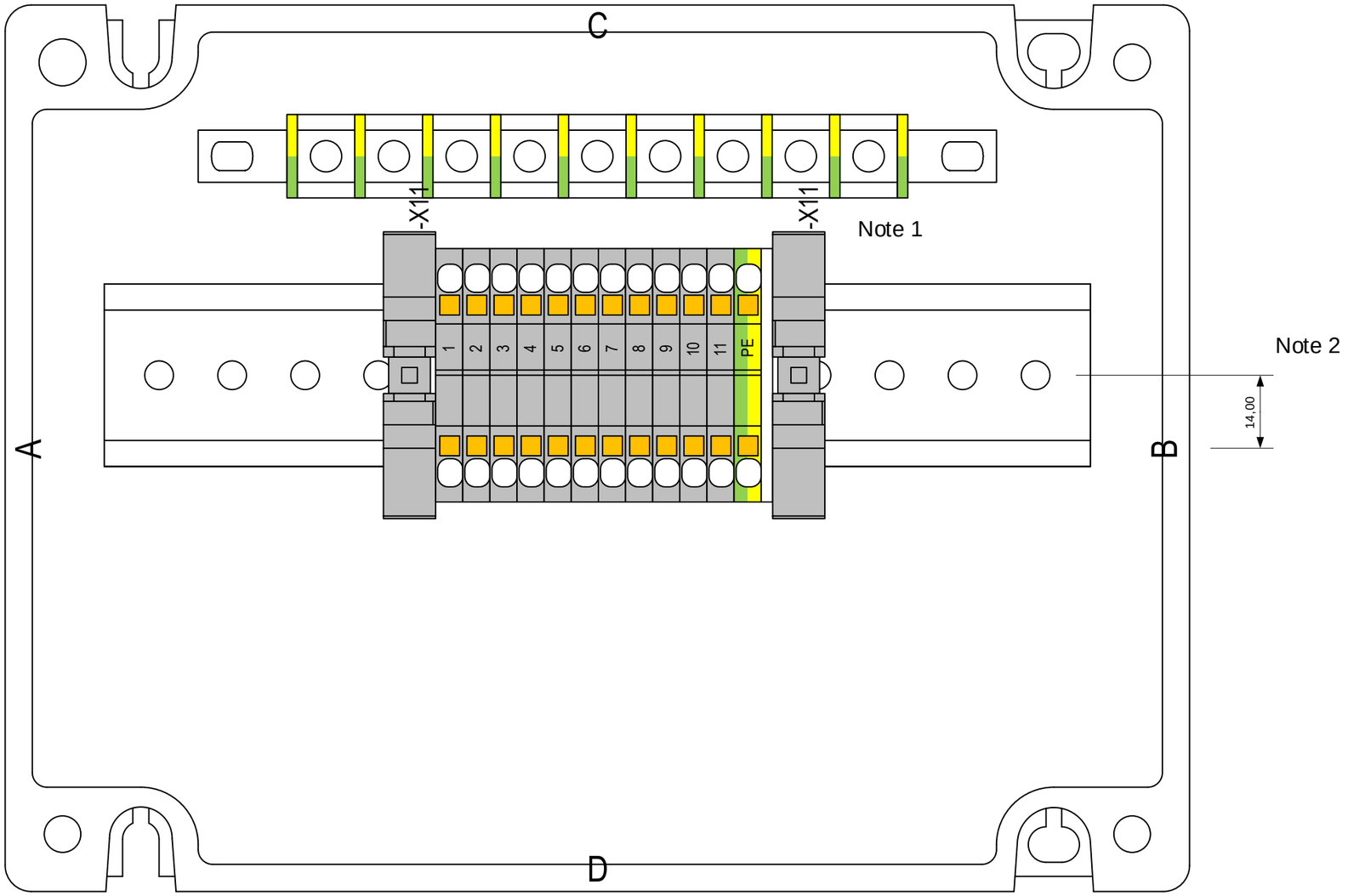

Note 1)
DIN-rail connected to earthbar via PE terminal, wired with green/yellow conductor 2,5 mm²

Note 2)
Terminal row mounted 14 mm above center of the box.

Index	Revision	Date	name
2	Final as built	19-3-2025	M.Besseling
1	For approval	13-11-2024	besselingmi

Drawn:	31-10-2024	elshofjo	
Engineer:	19-9-2024	besselingmi	
Approved:			
Changed:			

KANON LOADING EQUIPMENT B.V.

Ref: P242068, B242352 Quote:
Order: 2011280786 Item: 001000

KANON LOADING EQUIPMENT
www.kanon.nl

Electromach B.V.
Jan Tinbergenstraat 193
7559 SP Hengelo
The Netherlands
US

Layout
JB11. internal

Int. Revision :	P242068A91
Drawing No.	+MLA-A-JB11A
2011280786-001000-24	
Scale:	1 mm : 1 mm / A3
Refer to protection notice ISO 16016	Sheet: 61.2

Parts list

Row	Qty.	{}▲ SAP	Free issue	▲1 part of	▲2 name	▲3 Description	part number manufactu…	manufacturer
1	1	**286223**		+MLA-A -JB11A		8146A-061 Empty enclosure Ex e Polyester resin Glass fibre reinforced		R. STAHL
2	1	**136636**		+MLA-A -JB11A		Earthing rail , 9x4 mm2 copper Uncoated , 8146		R. STAHL
3	1	**137976**		+MLA-A -JB11A		mounting rail TS35 in enclosure 8146 for terminals length: 189mm		R. STAHL
4	2	**229919**		+MLA-A -JB11A	-A32BK	8161/7-M32-2109 Cable gland M32 9 ... 21 mm Unarmoured cable types , Polyamide , Black		R. STAHL
5	1	**245531**		+MLA-A -JB11A	-Ex label	Marking KDE 8146/1 ATEX/IEC		R. STAHL
6	1	**112591**		+MLA-A -JB11A -X11		Cover D-ST 2,5	3030417	PHOENIX
7	2	**112434**		+MLA-A -JB11A -X11		end bracket CLIPFIX 35	3022218	PHOENIX
8	11	**219442**		+MLA-A -JB11A -X11	1...11	PT 2,5 Terminal block , Grey	3209510	PHOENIX
9	1	**257740**		+MLA-A -JB11A -X11	PE	PT 2,5-PE Protective conductor terminal , Green-yellow	3209536	PHOENIX

Index	Revision	Date	name
2	Final as built	19-3-2025	M.Besseling
2	For approval	13-11-2024	besselingmi
2			

Drawn: 31-10-2024 elshofjo
Engineer: 19-9-2024 besselingmi
Approved:
Changed:

KANON LOADING EQUIPMENT B.V.

Ref: P242068, B242352 Quote:
Order: 2011280786 Item: 001000

KANON LOADING EQUIPMENT
www.kanon.nl

Electromach BV
Jan Tinbergenstraat 193
7559 SP Hengelo
The Netherlands
US

Parts list
JB11.

Int. Revision : P242068A91
Drawing No.: +MLA-A-JB11A
2011280786-001000-24
Scale: 1 mm : 1 mm / A3
Refer to protection notice ISO 16016
Sheet: 61.3 page 1 / 1

List of nameplates

Part of	Designation	Text 1	Text 2	Text 3	Material	Width	Height	Fixing	Char. Height	Backgr. Color	Letter Color
+MLA-A -JB11A		JB11A	P242068A10		plastic	41,00 mm	20,00 mm	screwed	5 / 3 mm	White	Black
+MLA-A -JB11A		JB11B	P242068B10		plastic	41,00 mm	20,00 mm	screwed	5 / 3 mm	White	Black

Index	Revision	Date	name			
2	Final as built	19-3-2025	M.Besseling	Drawn:	31-10-2024	elshofjo
2	For approval	13-11-2024	besselingmi	Engineer:	19-9-2024	besselingmi
2				Approved:		
				Changed:		

KANON LOADING EQUIPMENT B.V.

Ref: P242068, B242352 Quote:

Order: 2011280786 Item: 001000

KANON LOADING EQUIPMENT

www.kanon.nl

Electromach BV
Jan Tinbergenstraat 193
7559 SP Hengelo
The Netherlands

List of nameplates
JB11.

Int. Revision :

Drawing No.:
2011280786-001000-24

Refer to protection notice ISO 16016

P242068A91
+MLA-A-JB11A
Scale: 1 mm : 1 mm / A3
Sheet: 61.4 page 1 / 1

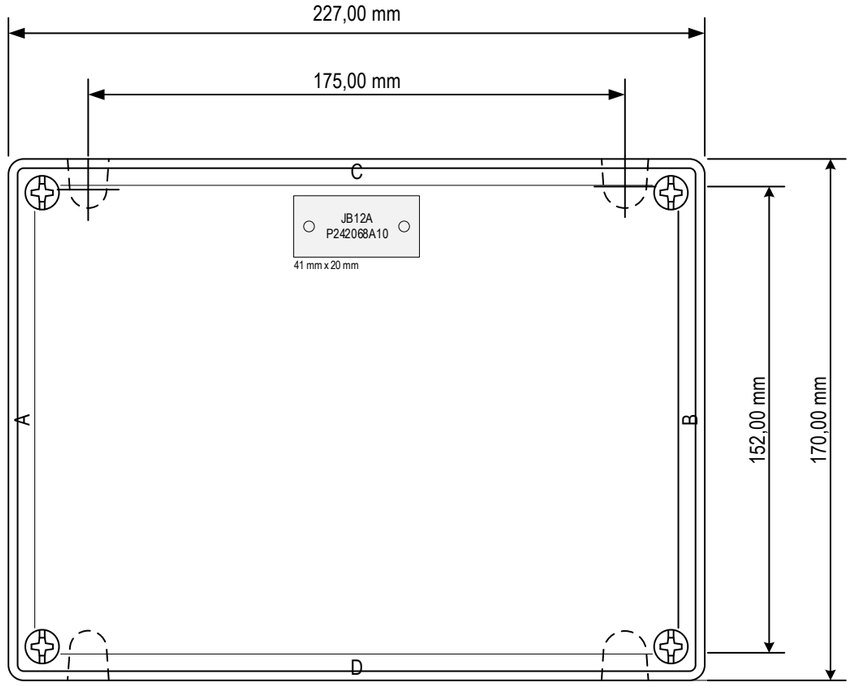

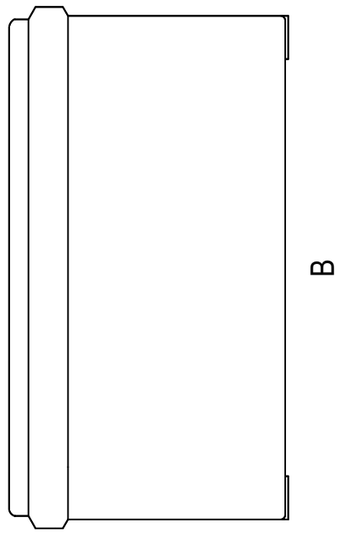

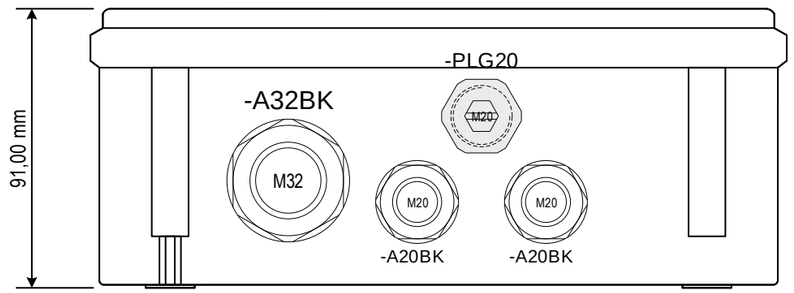

D

Type designation:	8146/1061
ATEX certificate:	PTB 01 ATEX 1016
ATEX Explosion protection:	II 2 G Ex eb IIC T5 Gb
IECEx certificate:	IECEx PTB 06.0046
IECEx Explosion protection:	Ex eb IIC T5 Gb
Further certificate:	NA
Further Explosion protection:	NA
PESO certificate:	NA
Degree of protection:	IP66
Ambient temperature:	Ta -20°C...+55°C
Rated Voltage:	352V
Connection cross-section	2,5mm²
Rated current	19A
Rated frequency:	NA
Material labels:	Polyester foil
Fixing labels:	Adhesive label
Nice label number:	138052

Index	Revision	Date	name
2	Final as built	19-3-2025	M.Besseling
1	For approval	13-11-2024	besselingmi

Drawn:	31-10-2024	elshofjo	
Engineer:	19-9-2024	besselingmi	
Approved:			
Changed:			

KANON LOADING EQUIPMENT B.V.

Ref: P242068, B242352 Quote:

Order: 2011280786 Item: 001000

KANON LOADING EQUIPMENT
www.kanon.nl

Electromach B.V.
Jan Tinbergenstraat 193
7559 SP Hengelo
The Netherlands
US

Layout
JB12. external

Int. Revision :	P242068A91
Drawing No.	+MLA-A-JB12A
2011280786-001000-24	Scale: 1 mm : 2 mm / A3
Refer to protection notice ISO 16016	Sheet: 62.1

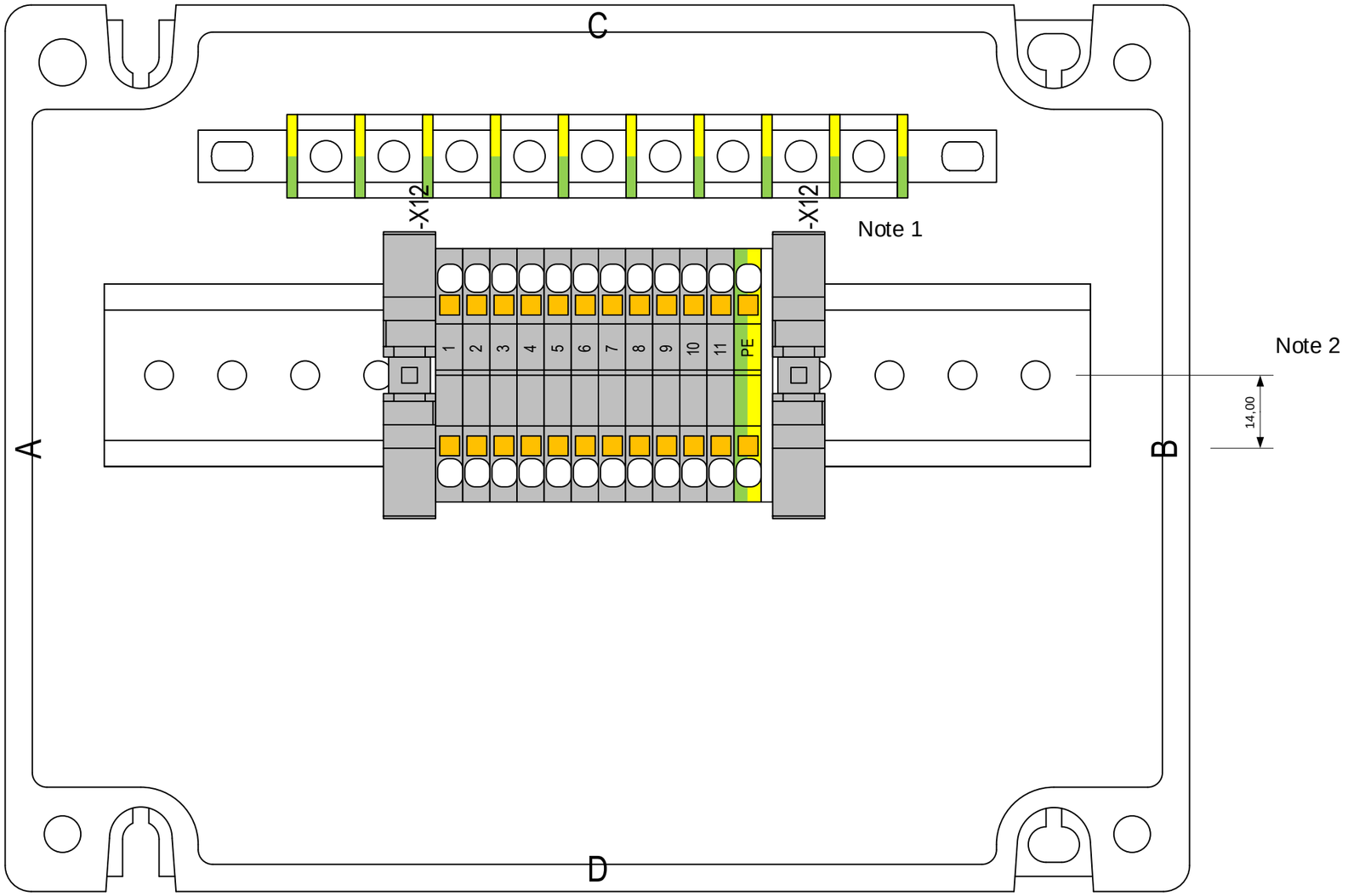

Note 1)
DIN-rail connected to earthbar via PE terminal, wired with green/yellow conductor 2,5 mm²

Note 2)
Terminal row mounted 14 mm above center of the box.

Index	Revision	Date	name
2	Final as built	19-3-2025	M.Besseling
1	For approval	13-11-2024	besselingmi

Drawn:	31-10-2024	elshofjo	
Engineer:	19-9-2024	besselingmi	
Approved:			
Changed:			

KANON LOADING EQUIPMENT B.V.

Ref: P242068, B242352 Quote:
Order: 2011280786 Item: 001000

KANON LOADING EQUIPMENT
www.kanon.nl

Electromach B.V.
Jan Tinbergenstraat 193
7559 SP Hengelo
The Netherlands
US

Layout
JB12. internal

Int. Revision :	P242068A91
Drawing No.	+MLA-A-JB12A
2011280786-001000-24	Scale: 1 mm : 1 mm / A3
Refer to protection notice ISO 16016	Sheet: 62.2

Parts list

Row	Qty.	{}▲ SAP	Free issue	▲1 part of	▲2 name	▲3 Description	part number manufactu…	manufacturer
1	1	**286223**		+MLA-A -JB12A		8146A-061 Empty enclosure Ex e Polyester resin Glass fibre reinforced		R. STAHL
2	1	**136636**		+MLA-A -JB12A		Earthing rail , 9x4 mm2 copper Uncoated , 8146		R. STAHL
3	1	**137976**		+MLA-A -JB12A		mounting rail TS35 in enclosure 8146 for terminals length: 189mm		R. STAHL
4	1	**229917**		+MLA-A -JB12A	-A20BK	8161/7-M20-1304 , 4 ... 13 mm Cable gland M20 , Polyamide Black		R. STAHL
5	1	**110865**		+MLA-A -JB12A -A20BK		Nut M20x1,5 Ms nickel plated	10063143	WISKA
6	1	**229917**		+MLA-A -JB12A	-A20BK	8161/7-M20-1304 , 4 ... 13 mm Cable gland M20 , Polyamide Black		R. STAHL
7	1	**110865**		+MLA-A -JB12A -A20BK		Nut M20x1,5 Ms nickel plated	10063143	WISKA
8	1	**229919**		+MLA-A -JB12A	-A32BK	8161/7-M32-2109 Cable gland M32 9 ... 21 mm Unarmoured cable types , Polyamide , Black		R. STAHL
9	1	**245531**		+MLA-A -JB12A	-Ex label	Marking KDE 8146/1 ATEX/IEC		R. STAHL
10	1	**143522**		+MLA-A -JB12A	-PLG20	8290/3-M20 Stopping plug M20 , Polyamide		R. STAHL
11	1	**112591**		+MLA-A -JB12A -X12		Cover D-ST 2,5	3030417	PHOENIX
12	2	**112434**		+MLA-A -JB12A -X12		end bracket CLIPFIX 35	3022218	PHOENIX
13	11	**219442**		+MLA-A -JB12A -X12	1...11	PT 2,5 Terminal block , Grey	3209510	PHOENIX
14	1	**257740**		+MLA-A -JB12A -X12	PE	PT 2,5-PE Protective conductor terminal , Green-yellow	3209536	PHOENIX

Index	Revision	Date	name			
2	Final as built	19-3-2025	M.Besseling	Drawn:	31-10-2024	elshofjo
2	For approval	13-11-2024	besselingmi	Engineer:	19-9-2024	besselingmi
2				Approved:		
				Changed:		

KANON LOADING EQUIPMENT B.V.

Ref: P242068, B242352 Quote:

Order: 2011280786 Item: 001000

KANON LOADING EQUIPMENT

www.kanon.nl

Electromach BV
Jan Tinbergenstraat 193
7559 SP Hengelo
The Netherlands
US

Parts list
JB12.

Int. Revision :	P242068A91
Drawing No.:	+MLA-A-JB12A
2011280786-001000-24	Scale: 1 mm : 1 mm / A3
Refer to protection notice ISO 16016	Sheet: 62.3 page 1 / 1

List of nameplates

Part of	Designation	Text 1	Text 2	Text 3	Material	Width	Height	Fixing	Char. Height	Backgr. Color	Letter Color
+MLA-A -JB12A		JB12A	P242068A10		plastic	41,00 mm	20,00 mm	screwed	5 / 3 mm	White	Black
+MLA-A -JB12A		JB12B	P242068B10		plastic	41,00 mm	20,00 mm	screwed	5 / 3 mm	White	Black

Index	Revision	Date	name			
2	Final as built	19-3-2025	M.Besseling	Drawn:	31-10-2024	elshofjo
2	For approval	13-11-2024	besselingmi	Engineer:	19-9-2024	besselingmi
2				Approved:		
				Changed:		

KANON LOADING EQUIPMENT B.V.

Ref: P242068, B242352 Quote:

Order: 2011280786 Item: 001000

KANON LOADING EQUIPMENT

www.kanon.nl

Electromach BV
Jan Tinbergenstraat 193
7559 SP Hengelo
The Netherlands

List of nameplates
JB12.

Int. Revision :	P242068A91
Drawing No.: 2011280786-001000-24	+MLA-A-JB12A
Refer to protection notice ISO 16016	Scale: 1 mm : 1 mm / A3
	Sheet: 62.4 page 1 / 1

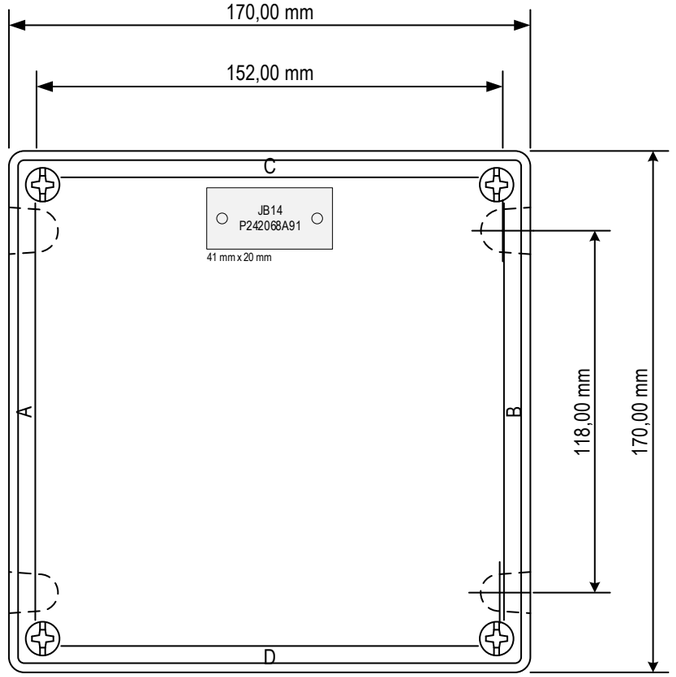

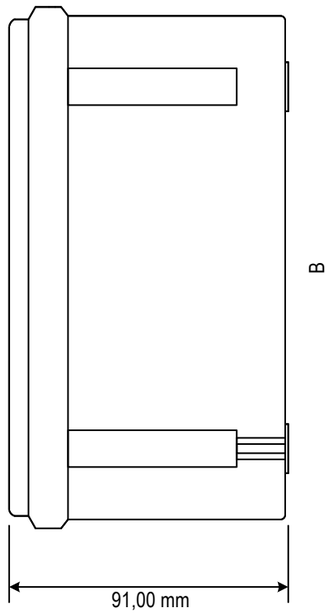

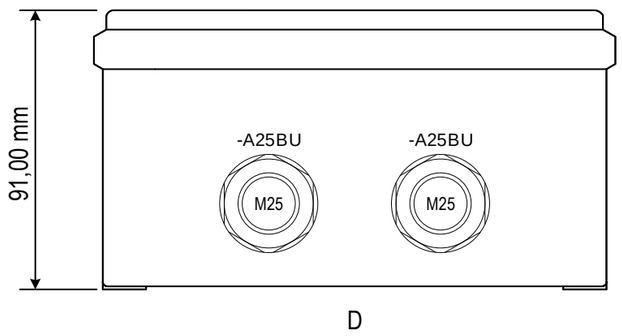

Type designation:	8146/2051
ATEX certificate:	PTB 01 ATEX 1016
ATEX Explosion protection:	II 2 G Ex ia ib IIC T6 Gb
IECEx certificate:	IECEx PTB 06.0046
IECEx Explosion protection:	Ex ia ib IIC T6 Gb
Further certificate:	NA
Further Explosion protection:	NA
PESO certificate:	NA
Degree of protection:	IP66
Ambient temperature:	Ta -20°C...+75°C
Rated Voltage:	60V
Connection cross-section	2,5mm²
Rated current	NA
Rated frequency:	NA
Material labels:	Polyester foil
Fixing labels:	Adhesive label
Nice label number:	138064

Index	Revision	Date	name			
2	Final as built	19-3-2025	M.Besseling	Drawn:	31-10-2024	elshofjo
1	For approval	13-11-2024	besselingmi	Engineer:	19-9-2024	besselingmi
				Approved:		
				Changed:		

KANON LOADING EQUIPMENT B.V.

Ref: P242068, B242352 Quote:
Order: 2011280786 Item: 001000

KANON LOADING EQUIPMENT
www.kanon.nl

Electromach B.V.
Jan Tinbergenstraat 193
7559 SP Hengelo
The Netherlands

Layout
JB14. external

Int. Revision :	P242068A91
Drawing No.	+HPP-JB14
2011280786-001000-24	Scale: 1 mm : 2 mm / A3
Refer to protection notice ISO 16016	Sheet: 64.1

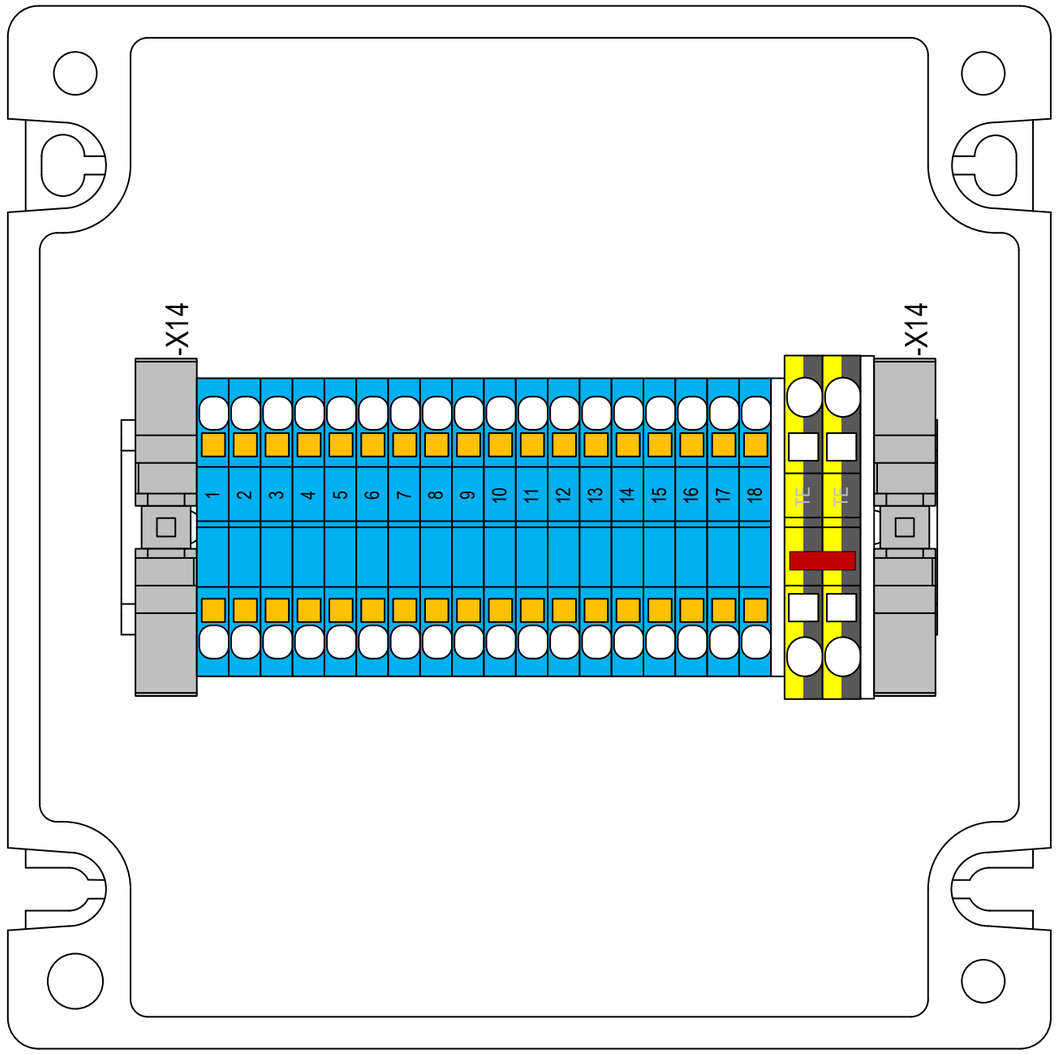

Index	Revision	Date	name			
2	Final as built	19-3-2025	M.Besseling	Drawn:	31-10-2024	elshofjo
1	For approval	13-11-2024	besselingmi	Engineer:	19-9-2024	besselingmi
				Approved:		
				Changed:		

KANON LOADING EQUIPMENT B.V.

Ref: P242068, B242352 Quote:

Order: 2011280786 Item: 001000

KANON LOADING EQUIPMENT

www.kanon.nl

Electromach B.V.
Jan Tinbergenstraat 193
7559 SP Hengelo
The Netherlands
US

Layout
JB14. internal

Int. Revision :	P242068A91
Drawing No.	+HPP-JB14
2011280786-001000-24	Scale: 1 mm : 1 mm / A3
Refer to protection notice ISO 16016	Sheet: 64.2

Parts list

Row	qty.	{}▲ material	Free issue	▲1 part of	▲2 name	▲3 sales text	part number manufacturer	manufacturer
1	1	**286221**		+HPP -JB14		8146A-051 Ex e empty enclosure Polyester resin Glass fibre reinforced		R. STAHL
2	1	**137970**		+HPP -JB14		mounting rail TS35 in enclosure 8146 for terminals length: 133mm		R. STAHL
3	1	**229956**		+HPP -JB14	-A25BU	8161/8-M25-1707 , 7 ... 17 mm Cable gland M25 , Polyamide Blue		R. STAHL
4	1	**110867**		+HPP -JB14 -A25BU		Nut M25x1,5 Ms nickel plated	10063144	WISKA
5	1	**229956**		+HPP -JB14	-A25BU	8161/8-M25-1707 , 7 ... 17 mm Cable gland M25 , Polyamide Blue		R. STAHL
6	1	**110867**		+HPP -JB14 -A25BU		Nut M25x1,5 Ms nickel plated	10063144	WISKA
7	1	**245532**		+HPP -JB14	-Ex label	Marking KDE 8146/2 ATEX/IEC		R. STAHL
8	1	**112591**		+HPP -JB14 -X14		End plate D-ST 2,5 Width : 2,200 mm, Grey	3030417	PHOENIX
9	1	**112921**		+HPP -JB14 -X14		End plate D-ST 4 Width : 2,200 mm, Grey	3030420	PHOENIX
10	1	**219443**		+HPP -JB14 -X14		PT 4 Terminal block , Grey	3211757	PHOENIX
11	1	**112929**		+HPP -JB14 -X14		Plug-in bridge FBS 2-6	3030336	PHOENIX
12	2	**112434**		+HPP -JB14 -X14		end bracket CLIPFIX 35	3022218	PHOENIX
13	18	**257739**		+HPP -JB14 -X14	1...18	PT 2,5 BU Terminal block , Blue	3209523	PHOENIX
14	2	**319293**		+HPP -JB14 -X14	TE	PT 4-FE terminal black-yellow	1077082	PHOENIX

Index	Revision	Date	name					
2	*Final as built*	*19-3-2025*	*M.Besseling*	Drawn:	*31-10-2024*	*elshofjo*		
2	*For approval*	*13-11-2024*	*besselingmi*	Engineer:	*19-9-2024*	*besselingmi*		
2				Approved:				
				Changed:				

KANON LOADING EQUIPMENT B.V.

Ref: *P242068, B242352* Quote:

Order: *2011280786* Item: *001000*

KANON LOADING EQUIPMENT

www.kanon.nl

Electromach BV
Jan Tinbergenstraat 193
7559 SP Hengelo
The Netherlands
US

Parts list
JB14.

Int. Revision :	*P242068A91*
Drawing No.: *2011280786-001000-24*	*+HPP-JB14*
	Scale: *1 mm : 1 mm / A3*
Refer to protection notice ISO 16016	Sheet: *64.3* page *1 / 1*

List of nameplates

Part of	Text 1	Text 2	Text 3	Material	Width	Height	Fixing	Char. Height	Backgr. Color	Letter Color
+HPP -JB14	JB14	P242068A91		plastic	41,00 mm	20,00 mm	screwed	5 / 3 mm	White	Black

Index	Revision	Date	name			
2	Final as built	19-3-2025	M.Besseling	Drawn:	31-10-2024	elshofjo
2	For approval	13-11-2024	besselingmi	Engineer:	19-9-2024	besselingmi
2				Approved:		
				Changed:		

KANON LOADING EQUIPMENT B.V.

Ref: P242068, B242352 Quote:
Order: 2011280786 Item: 001000

KANON LOADING EQUIPMENT
www.kanon.nl

Electromach BV
Jan Tinbergenstraat 193
7559 SP Hengelo
The Netherlands

List of nameplates
JB14.

Int. Revision :
Drawing No.:
2011280786-001000-24
Refer to protection notice ISO 16016

P242068A91
+HPP-JB14
Scale: 1 mm : 1 mm / A3
Sheet: 64.4 page 1 / 1

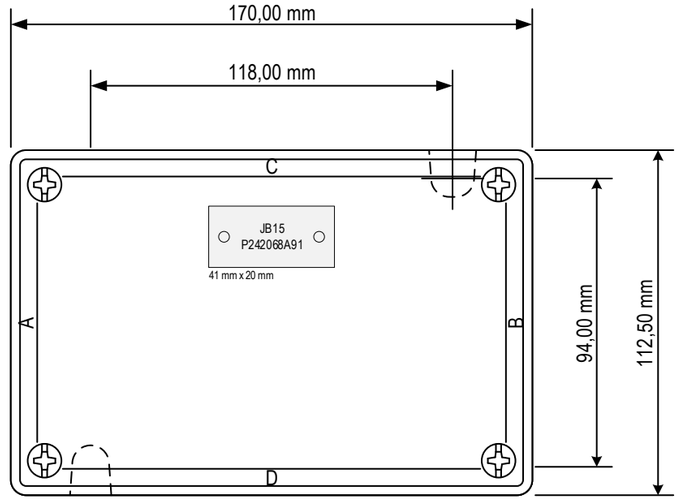

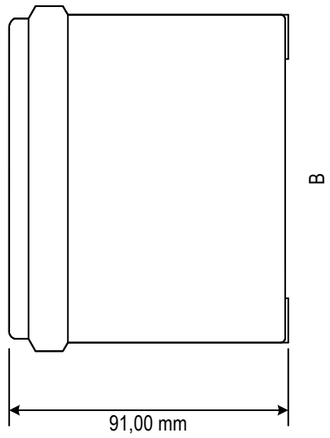

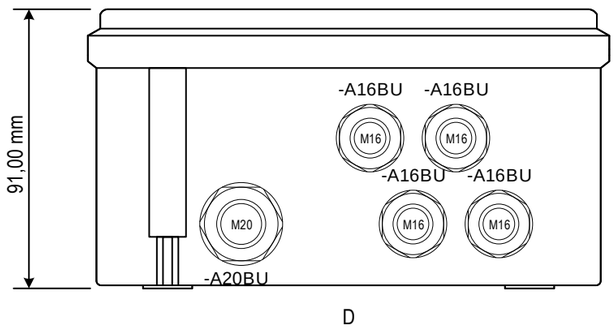

Type designation:	8146/2041
ATEX certificate:	PTB 01 ATEX 1016
ATEX Explosion protection:	II 2 G Ex ia ib IIC T6 Gb
IECEx certificate:	IECEx PTB 06.0046
IECEx Explosion protection:	Ex ia ib IIC T6 Gb
Further certificate:	NA
Further Explosion protection:	NA
PESO certificate:	NA
Degree of protection:	IP66
Ambient temperature:	Ta -20°C...+75°C
Rated Voltage:	60V
Connection cross-section	2,5mm²
Rated current	NA
Rated frequency:	NA
Material labels:	Polyester foil
Fixing labels:	Adhesive label
Nice label number:	138064

Index	Revision	Date	name			
2	Final as built	19-3-2025	M.Besseling	Drawn:	31-10-2024	elshofjo
1	For approval	13-11-2024	besselingmi	Engineer:	19-9-2024	besselingmi
				Approved:		
				Changed:		

KANON LOADING EQUIPMENT B.V.

Ref: P242068, B242352 Quote:
Order: 2011280786 Item: 001000

KANON LOADING EQUIPMENT
www.kanon.nl

Electromach B.V.
Jan Tinbergenstraat 193
7559 SP Hengelo
The Netherlands

Layout
JB15 external

Int. Revision :	P242068A91
Drawing No.	+HPP-JB15
2011280786-001000-24	Scale: 1 mm : 2 mm / A3
Refer to protection notice ISO 16016	Sheet: 65.1

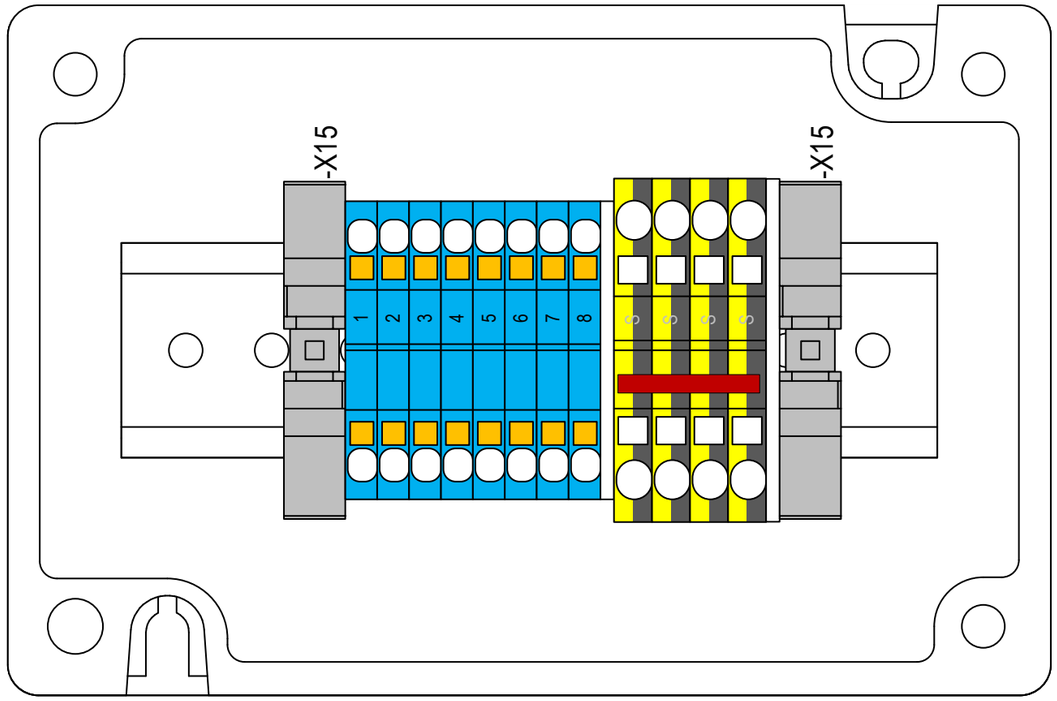

Index	Revision	Date	name			
2	Final as built	19-3-2025	M.Besseling	Drawn:	31-10-2024	elshofjo
1	For approval	13-11-2024	besselingmi	Engineer:	19-9-2024	besselingmi
				Approved:		
				Changed:		

KANON LOADING EQUIPMENT B.V.

Ref: P242068, B242352 Quote:

Order: 2011280786 Item: 001000

KANON LOADING EQUIPMENT

www.kanon.nl

Electromach B.V.
Jan Tinbergenstraat 193
7559 SP Hengelo
The Netherlands
US

Layout
JB15 internal

Int. Revision :	P242068A91
Drawing No.	+HPP-JB15
2011280786-001000-24	Scale: 1 mm : 1 mm / A3
Refer to protection notice ISO 16016	Sheet: 65.2

Parts list

Row	Qty.	{}▲ SAP	Free issue	▲1 part of	▲2 name	▲3 Description	part number manufactu…	manufacturer
1	1	**286138**		+HPP -JB15		8146A-041 Ex e empty enclosure Polyester resin Glass fibre reinforced		R. STAHL
2	1	**137970**		+HPP -JB15		mounting rail TS35 in enclosure 8146 for terminals length: 133mm		R. STAHL
3	1	**229954**		+HPP -JB15	-A16BU	8161/8-M16-0902 , 2 ... 9 mm Cable gland M16 , Polyamide Blue		R. STAHL
4	1	**110863**		+HPP -JB15 -A16BU		Nut M16x1,5 Ms nickel plated	10063142	WISKA
5	1	**229954**		+HPP -JB15	-A16BU	8161/8-M16-0902 , 2 ... 9 mm Cable gland M16 , Polyamide Blue		R. STAHL
6	1	**110863**		+HPP -JB15 -A16BU		Nut M16x1,5 Ms nickel plated	10063142	WISKA
7	1	**229954**		+HPP -JB15	-A16BU	8161/8-M16-0902 , 2 ... 9 mm Cable gland M16 , Polyamide Blue		R. STAHL
8	1	**110863**		+HPP -JB15 -A16BU		Nut M16x1,5 Ms nickel plated	10063142	WISKA
9	1	**229954**		+HPP -JB15	-A16BU	8161/8-M16-0902 , 2 ... 9 mm Cable gland M16 , Polyamide Blue		R. STAHL
10	1	**110863**		+HPP -JB15 -A16BU		Nut M16x1,5 Ms nickel plated	10063142	WISKA
11	1	**229955**		+HPP -JB15	-A20BU	8161/8-M20-1304 , 4 ... 13 mm Cable gland M20 , Polyamide Blue		R. STAHL
12	1	**110865**		+HPP -JB15 -A20BU		Nut M20x1,5 Ms nickel plated	10063143	WISKA
13	1	**245531**		+HPP -JB15	-Ex label	Marking KDE 8146/1 ATEX/IEC		R. STAHL
14	1	**112591**		+HPP -JB15 -X15		End plate D-ST 2,5 Width : 2,200 mm, Grey	3030417	PHOENIX
15	1	**112921**		+HPP -JB15 -X15		End plate D-ST 4 Width : 2,200 mm, Grey	3030420	PHOENIX
16	1	**113071**		+HPP -JB15 -X15		Jumper FBS 4-6	3030255	PHOENIX
17	2	**112434**		+HPP -JB15 -X15		end bracket CLIPFIX 35	3022218	PHOENIX
18	8	**257739**		+HPP -JB15 -X15	1...8	PT 2,5 BU Terminal block , Blue	3209523	PHOENIX
19	4	**319293**		+HPP -JB15 -X15	S	PT 4-FE terminal black-yellow	1077082	PHOENIX

Index	Revision	Date	name
2	Final as built	19-3-2025	M.Besseling
2	For approval	13-11-2024	besselingmi
2			

Drawn:	31-10-2024	elshofjo	
Engineer:	19-9-2024	besselingmi	
Approved:			
Changed:			

KANON LOADING EQUIPMENT B.V.

Ref: P242068, B242352 Quote:

Order: 2011280786 Item: 001000

KANON LOADING EQUIPMENT

www.kanon.nl

Electromach BV
Jan Tinbergenstraat 193
7559 SP Hengelo
The Netherlands
US

Parts list
JB15

Int. Revision :	P242068A91
Drawing No.:	+HPP-JB15
2011280786-001000-24	Scale: 1 mm : 1 mm / A3
Refer to protection notice ISO 16016	Sheet: 65.3 page 1 / 1

List of nameplates

Part of	Designation	Text 1	Text 2	Text 3	Material	Width	Height	Fixing	Char. Height	Backgr. Color	Letter Color
+HPP -JB15		JB15	P242068A91		plastic	41,00 mm	20,00 mm	screwed	5 / 3 mm	White	Black

Index	Revision	Date	name			
2	Final as built	19-3-2025	M.Besseling	Drawn:	31-10-2024	elshofjo
2	For approval	13-11-2024	besselingmi	Engineer:	19-9-2024	besselingmi
2				Approved:		
				Changed:		

KANON LOADING EQUIPMENT B.V.

Ref: P242068, B242352 Quote:

Order: 2011280786 Item: 001000

KANON LOADING EQUIPMENT

www.kanon.nl

Electromach BV
Jan Tinbergenstraat 193
7559 SP Hengelo
The Netherlands

List of nameplates
JB15

Int. Revision :	P242068A91
Drawing No.: 2011280786-001000-24	+HPP-JB15
Refer to protection notice ISO 16016	Scale: 1 mm : 1 mm / A3
	Sheet: 65.4 page 1 / 1

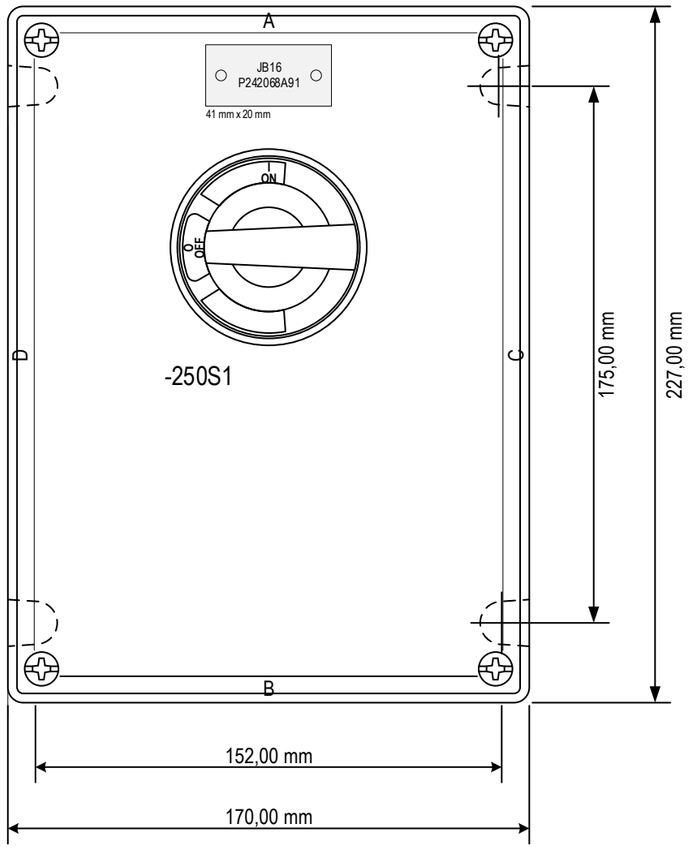

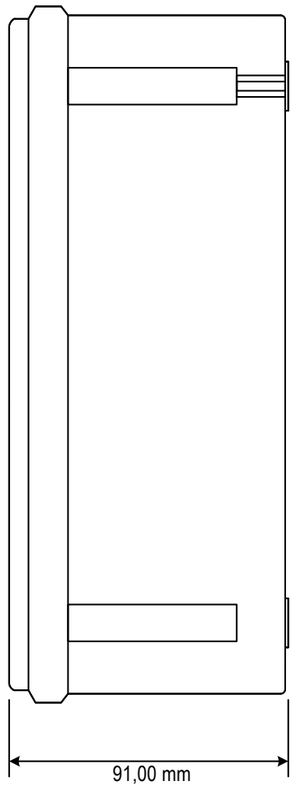

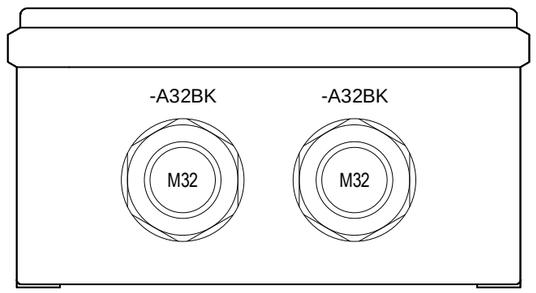

B

Type designation:	8146/5061
ATEX certificate:	PTB 01 ATEX 1024
ATEX Explosion protection:	II 2 G Ex db eb IIC T5 Gb
IECEx certificate:	IECEx PTB 06.0090
IECEx Explosion protection:	Ex db eb IIC T5 Gb
Further certificate:	NA
Further Explosion protection:	NA
PESO certificate:	Yes
Degree of protection:	IP66
Ambient temperature:	Ta -20°C...+55°C
Rated Voltage:	550V
Connection cross-section	6mm²
Rated current	25A
Rated frequency:	50/60Hz
Material labels:	Polyester foil
Fixing labels:	Adhesive label
Nice label number:	138076

Index	Revision	Date	name
2	Final as built	19-3-2025	M.Besseling
1	For approval	13-11-2024	besselingmi

Drawn: 31-10-2024 elshofjo
Engineer: 19-9-2024 besselingmi
Approved:
Changed:

KANON LOADING EQUIPMENT B.V.

Ref: P242068, B242352 Quote:
Order: 2011280786 Item: 001000

KANON LOADING EQUIPMENT
www.kanon.nl

Electromach B.V.
Jan Tinbergenstraat 193
7559 SP Hengelo
The Netherlands
US

Layout
JB16 external

Int. Revision :	P242068A91
Drawing No.	+HPP-JB16
2011280786-001000-24	Scale: 1 mm : 2 mm / A3
Refer to protection notice ISO 16016	Sheet: 66.1

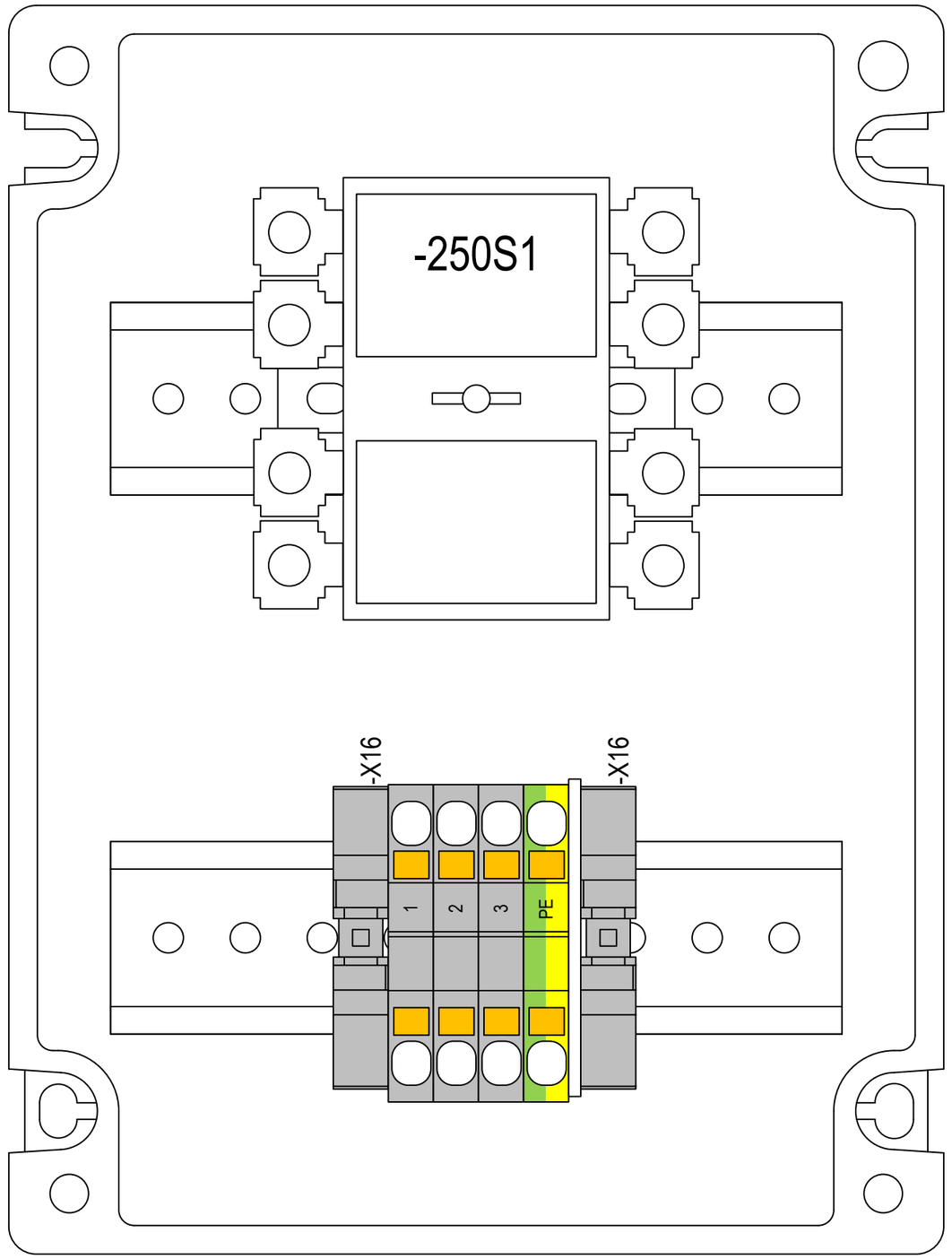

2	*Final as built*	*19-3-2025*	*M.Besseling*	Drawn:	*31-10-2024*	*elshofjo*	***KANON LOADING EQUIPMENT B.V.***		***Electromach B.V.***	Layout	Int. Revision :	*P242068A91*
1	*For approval*	*13-11-2024*	*besselingmi*	Engineer:	*19-9-2024*	*besselingmi*			*Jan Tinbergenstraat 193*	JB16 internal	Drawing No.	*+HPP-JB16*
				Approved:			Ref: *P242068, B242352*	Quote:	*7559 SP Hengelo*		*2011280786-001000-24*	Scale: *1 mm : 1 mm / A3*
Index	Revision	Date	name	Changed:			Order: *2011280786*	Item: *001000*	*The Netherlands*		Refer to protection notice ISO 16016	Sheet: *66.2*

KANON LOADING EQUIPMENT
www.kanon.nl
US

Parts list

Row	Qty.	{}▲ SAP	Free issue	▲1 part of	▲2 name	▲3 Description	part number manufactu…	manufacturer
1	1	**286223**		+HPP -JB16		8146A-061 Empty enclosure Ex e Polyester resin Glass fibre reinforced		R. STAHL
2	2	**137970**		+HPP -JB16		mounting rail TS35 in enclosure 8146 for terminals length: 133mm		R. STAHL
3	1	**229919**		+HPP -JB16	-A32BK	8161/7-M32-2109 Cable gland M32 9 ... 21 mm Unarmoured cable types , Polyamide , Black		R. STAHL
4	1	**110869**		+HPP -JB16 -A32BK		Nut M32x1,5 Ms nickel plated	10063145	WISKA
5	1	**229919**		+HPP -JB16	-A32BK	8161/7-M32-2109 Cable gland M32 9 ... 21 mm Unarmoured cable types , Polyamide , Black		R. STAHL
6	1	**110869**		+HPP -JB16 -A32BK		Nut M32x1,5 Ms nickel plated	10063145	WISKA
7	1	**247626**		+HPP -JB16	-Ex label	Marking KDE 8146/5 ATEX/IEC Control box		R. STAHL
8	1	**169492**		+HPP -JB16	-250S1	8006/4-003-00 Load and motor switch , 4 P , 4 NO		R. STAHL
9	1	**282336**		+HPP -JB16 -250S1		8602A3-736-S-90I-E02 Large rotary actuator , Maxi , Black - black		R. STAHL
10	1	**257782**		+HPP -JB16 -X16		End plate D-PT 6 Width : 2.200 mm, Grey	3212044	PHOENIX
11	2	**112434**		+HPP -JB16 -X16		end bracket CLIPFIX 35	3022218	PHOENIX
12	3	**257770**		+HPP -JB16 -X16	1...3	PT 6 Terminal block , Grey	3211813	PHOENIX
13	1	**257772**		+HPP -JB16 -X16	PE	PT 6-PE Protective conductor terminal , Green-yellow	3211822	PHOENIX

Index	Revision	Date	name						
2	Final as built	19-3-2025	M.Besseling	Drawn:	31-10-2024	elshofjo	**KANON LOADING EQUIPMENT B.V.**		
2	For approval	13-11-2024	besselingmi	Engineer:	19-9-2024	besselingmi			
2				Approved:			Ref: P242068, B242352	Quote:	
				Changed:			Order: 2011280786	Item: 001000	

KANON LOADING EQUIPMENT
www.kanon.nl

Electromach BV
Jan Tinbergenstraat 193
7559 SP Hengelo
The Netherlands
US

Parts list
JB16

Int. Revision :	P242068A91
Drawing No.:	+HPP-JB16
2011280786-001000-24	Scale: 1 mm : 1 mm / A3
Refer to protection notice ISO 16016	Sheet: 66.3 page 1 / 1

List of nameplates

Part of	Designation	Text 1	Text 2	Text 3	Material	Width	Height	Fixing	Char. Height	Backgr. Color	Letter Color
+HPP -JB16		JB16	P242068A91		plastic	41,00 mm	20,00 mm	screwed	5 / 3 mm	White	Black

Index	Revision	Date	name			
2	Final as built	19-3-2025	M.Besseling	Drawn:	31-10-2024	elshofjo
2	For approval	13-11-2024	besselingmi	Engineer:	19-9-2024	besselingmi
2				Approved:		
				Changed:		

KANON LOADING EQUIPMENT B.V.

Ref: P242068, B242352 Quote:
Order: 2011280786 Item: 001000

KANON LOADING EQUIPMENT
www.kanon.nl

Electromach BV
Jan Tinbergenstraat 193
7559 SP Hengelo
The Netherlands
US

List of nameplates
JB16

Int. Revision :	P242068A91
Drawing No.: 2011280786-001000-24	+HPP-JB16
Refer to protection notice ISO 16016	Scale: 1 mm : 1 mm / A3
	Sheet: 66.4 page 1 / 1

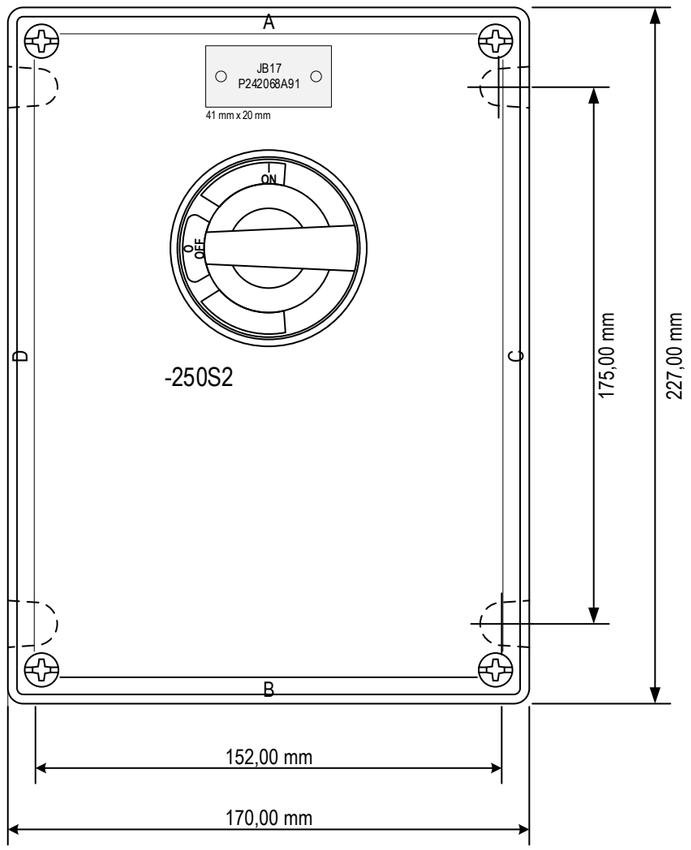

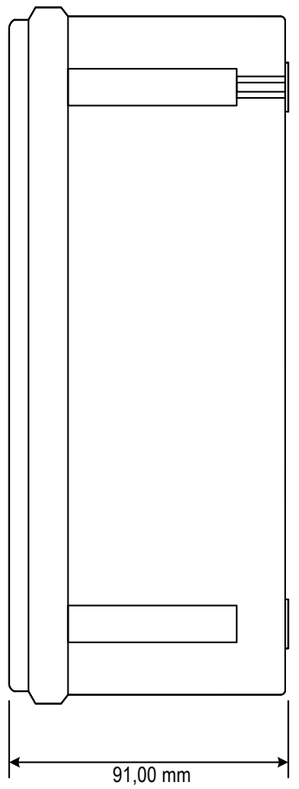

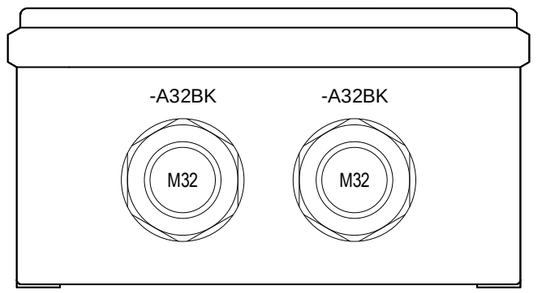

B

Type designation:	8146/5061
ATEX certificate:	PTB 01 ATEX 1024
ATEX Explosion protection:	II 2 G Ex db eb IIC T5 Gb
IECEx certificate:	IECEx PTB 06.0090
IECEx Explosion protection:	Ex db eb IIC T5 Gb
Further certificate:	NA
Further Explosion protection:	NA
PESO certificate:	Yes
Degree of protection:	IP66
Ambient temperature:	Ta -20°C...+55°C
Rated Voltage:	550V
Connection cross-section	6mm²
Rated current	25A
Rated frequency:	50/60Hz
Material labels:	Polyester foil
Fixing labels:	Adhesive label
Nice label number:	138076

Index	Revision	Date	name
2	Final as built	19-3-2025	M.Besseling
1	For approval	13-11-2024	besselingmi

Drawn: 31-10-2024 elshofjo
Engineer: 19-9-2024 besselingmi
Approved:
Changed:

KANON LOADING EQUIPMENT B.V.

Ref: P242068, B242352 Quote:
Order: 2011280786 Item: 001000

KANON LOADING EQUIPMENT
www.kanon.nl

Electromach B.V.
Jan Tinbergenstraat 193
7559 SP Hengelo
The Netherlands
US

Layout
JB17 external

Int. Revision : P242068A91
Drawing No. 2011280786-001000-24 +HPP-JB17
Refer to protection notice ISO 16016
Scale: 1 mm : 2 mm / A3
Sheet: 67.1

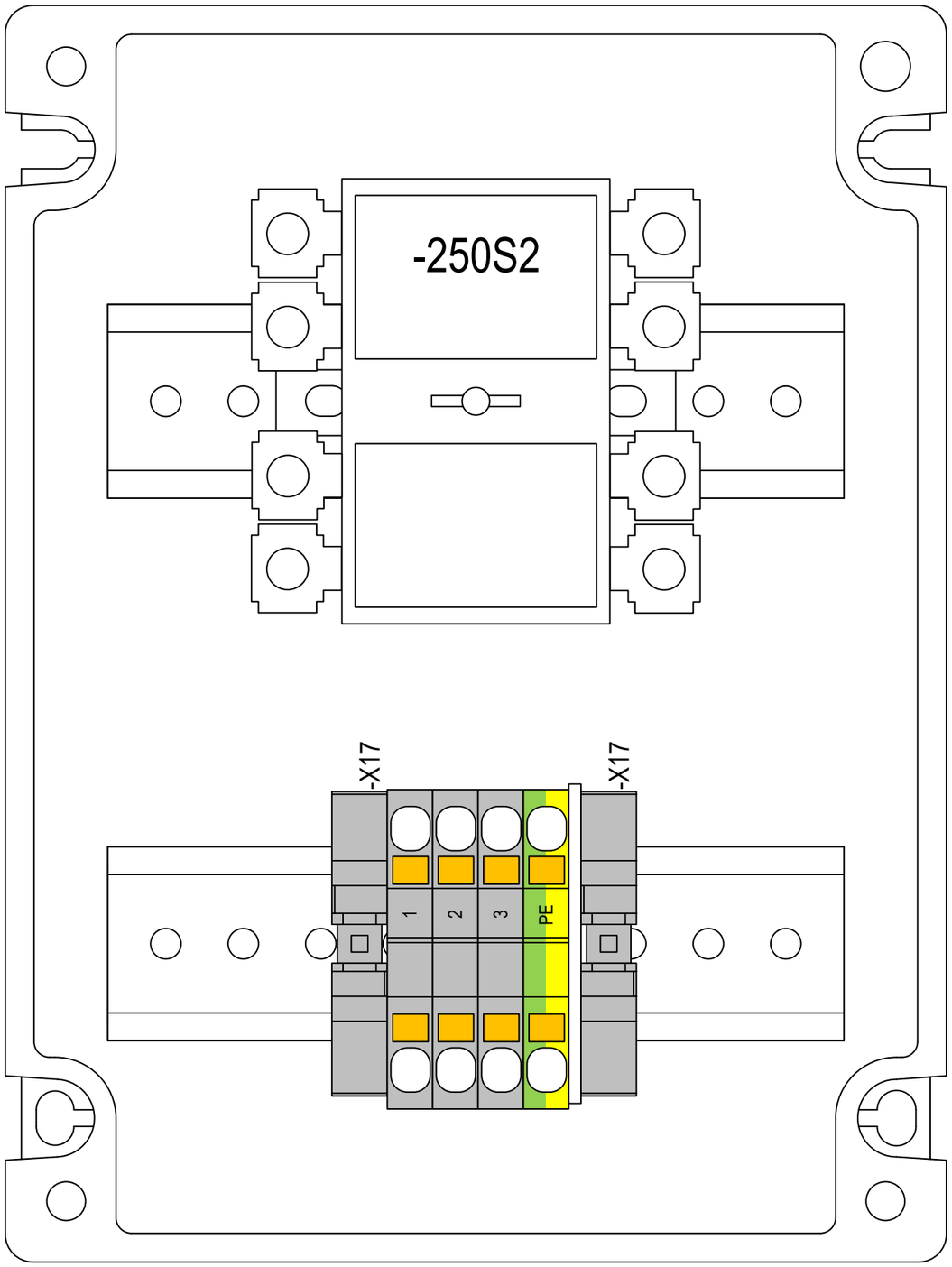

2	*Final as built*	*19-3-2025*	*M.Besseling*	Drawn:	*31-10-2024*	*elshofjo*	***KANON LOADING EQUIPMENT B.V.***		***Electromach B.V.***	Layout	Int. Revision :	*P242068A91*
1	*For approval*	*13-11-2024*	*besselingmi*	Engineer:	*19-9-2024*	*besselingmi*			*Jan Tinbergenstraat 193*	JB17 internal	Drawing No.	*+HPP-JB17*
				Approved:			Ref: *P242068, B242352*	Quote:	*7559 SP Hengelo*		*2011280786-001000-24*	Scale: *1 mm : 1 mm / A3*
Index	Revision	Date	name	Changed:			Order: *2011280786*	Item: *001000*	*The Netherlands* US		Refer to protection notice ISO 16016	Sheet: *67.2*

KANON LOADING EQUIPMENT
www.kanon.nl

Parts list

Row	Qty.	{}▲ SAP	Free issue	▲1 part of	▲2 name	▲3 Description	part number manufactu…	manufacturer
1	1	**286223**		+HPP -JB17		8146A-061 Empty enclosure Ex e Polyester resin Glass fibre reinforced		R. STAHL
2	2	**137970**		+HPP -JB17		mounting rail TS35 in enclosure 8146 for terminals length: 133mm		R. STAHL
3	1	**229919**		+HPP -JB17	-A32BK	8161/7-M32-2109 Cable gland M32 9 ... 21 mm Unarmoured cable types , Polyamide , Black		R. STAHL
4	1	**110869**		+HPP -JB17 -A32BK		Nut M32x1,5 Ms nickel plated	10063145	WISKA
5	1	**229919**		+HPP -JB17	-A32BK	8161/7-M32-2109 Cable gland M32 9 ... 21 mm Unarmoured cable types , Polyamide , Black		R. STAHL
6	1	**110869**		+HPP -JB17 -A32BK		Nut M32x1,5 Ms nickel plated	10063145	WISKA
7	1	**247626**		+HPP -JB17	-Ex label	Marking KDE 8146/5 ATEX/IEC Control box		R. STAHL
8	1	**169492**		+HPP -JB17	-250S2	8006/4-003-00 Load and motor switch , 4 P , 4 NO		R. STAHL
9	1	**282336**		+HPP -JB17 -250S2		8602A3-736-S-90I-E02 Large rotary actuator , Maxi , Black - black		R. STAHL
10	1	**257782**		+HPP -JB17 -X17		End plate D-PT 6 Width : 2.200 mm, Grey	3212044	PHOENIX
11	2	**112434**		+HPP -JB17 -X17		end bracket CLIPFIX 35	3022218	PHOENIX
12	3	**257770**		+HPP -JB17 -X17	1...3	PT 6 Terminal block , Grey	3211813	PHOENIX
13	1	**257772**		+HPP -JB17 -X17	PE	PT 6-PE Protective conductor terminal , Green-yellow	3211822	PHOENIX

Index	Revision	Date	name							
2	Final as built	19-3-2025	M.Besseling	Drawn:	31-10-2024	elshofjo	**KANON LOADING EQUIPMENT B.V.**		KANON LOADING EQUIPMENT	**Electromach BV**
2	For approval	13-11-2024	besselingmi	Engineer:	19-9-2024	besselingmi				Jan Tinbergenstraat 193
2				Approved:			Ref: P242068, B242352	Quote:	www.kanon.nl	7559 SP Hengelo
				Changed:			Order: 2011280786	Item: 001000		The Netherlands

Parts list	
JB17	
Int. Revision :	P242068A91
Drawing No.:	+HPP-JB17
2011280786-001000-24	Scale: 1 mm : 1 mm / A3
Refer to protection notice ISO 16016	Sheet: 67.3 page 1 / 1

List of nameplates

Part of	Designation	Text 1	Text 2	Text 3	Material	Width	Height	Fixing	Char. Height	Backgr. Color	Letter Color
+HPP -JB17		JB17	P242068A91		plastic	41,00 mm	20,00 mm	screwed	5 / 3 mm	White	Black

Index	Revision	Date	name			
2	Final as built	19-3-2025	M.Besseling	Drawn:	31-10-2024	elshofjo
2	For approval	13-11-2024	besselingmi	Engineer:	19-9-2024	besselingmi
2				Approved:		
				Changed:		

KANON LOADING EQUIPMENT B.V.

Ref: P242068, B242352 Quote:
Order: 2011280786 Item: 001000

KANON LOADING EQUIPMENT
www.kanon.nl

Electromach BV
Jan Tinbergenstraat 193
7559 SP Hengelo
The Netherlands

List of nameplates
JB17

Int. Revision :	P242068A91
Drawing No.: 2011280786-001000-24	+HPP-JB17
Refer to protection notice ISO 16016	Scale: 1 mm : 1 mm / A3
	Sheet: 67.4 page 1 / 1

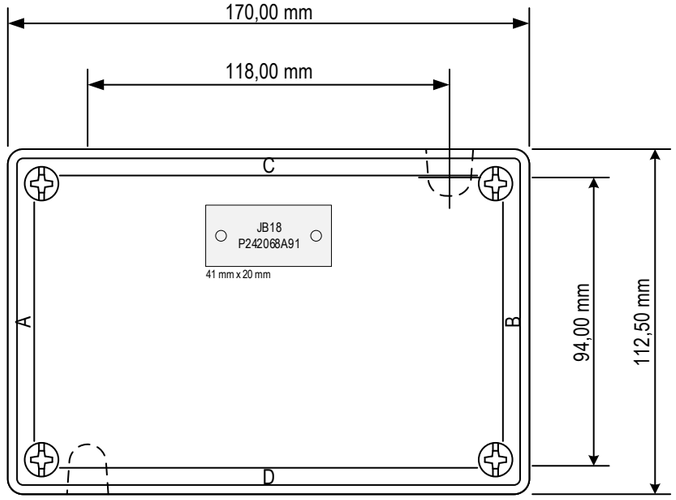

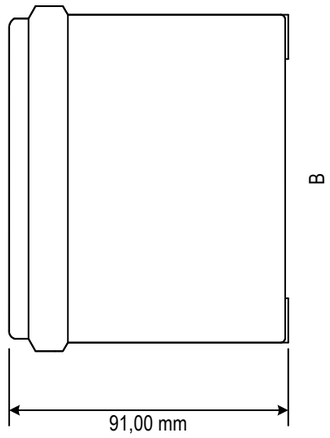

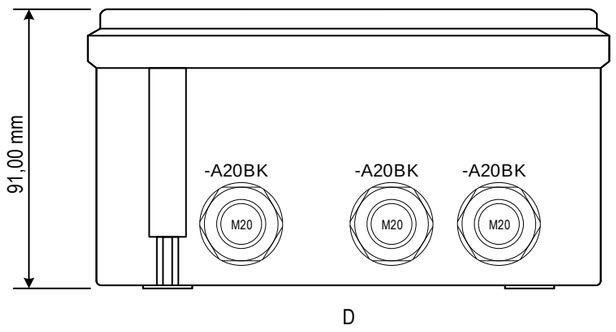

Type designation:	8146/1041
ATEX certificate:	PTB 01 ATEX 1016
ATEX Explosion protection:	II 2 G Ex eb IIC T5 Gb
IECEx certificate:	IECEx PTB 06.0046
IECEx Explosion protection:	Ex eb IIC T5 Gb
Further certificate:	NA
Further Explosion protection:	NA
PESO certificate:	NA
Degree of protection:	IP66
Ambient temperature:	Ta -20°C...+55°C
Rated Voltage:	352V
Connection cross-section	2,5mm²
Rated current	19A
Rated frequency:	NA
Material labels:	Polyester foil
Fixing labels:	Self adhesive
Nice label number:	138052

Index	Revision	Date	name							
2	Final as built	19-3-2025	M.Besseling	Drawn:	31-10-2024	elshofjo	**KANON LOADING EQUIPMENT B.V.**		Layout JB18 external	Int. Revision : P242068A91
1	For approval	13-11-2024	besselingmi	Engineer:	19-9-2024	besselingmi				Drawing No. +HPP-JB18
				Approved:			Ref: P242068, B242352	Quote:		2011280786-001000-24 Scale: 1 mm : 2 mm / A3
				Changed:			Order: 2011280786	Item: 001000		Refer to protection notice ISO 16016 Sheet: 68.1

KANON LOADING EQUIPMENT
www.kanon.nl

Electromach B.V.
Jan Tinbergenstraat 193
7559 SP Hengelo
The Netherlands
US

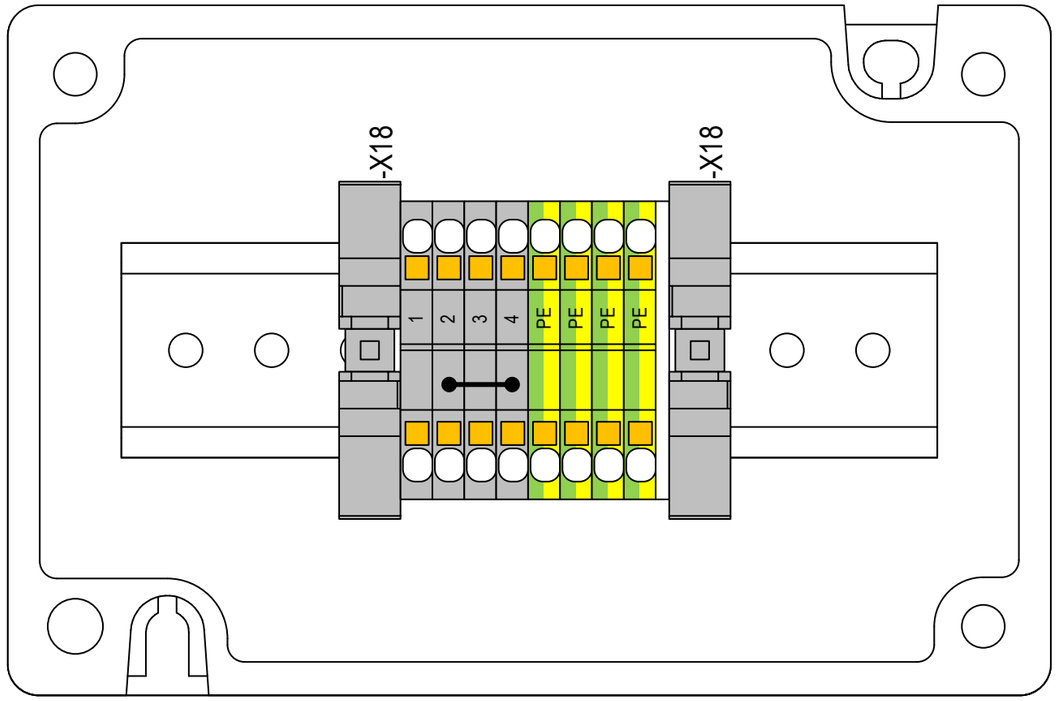

2	*Final as built*	*19-3-2025*	*M.Besseling*	Drawn:	*31-10-2024*	*elshofjo*	***KANON LOADING EQUIPMENT B.V.***		***Electromach B.V.***	Layout	Int. Revision :	*P242068A91*
1	*For approval*	*13-11-2024*	*besselingmi*	Engineer:	*19-9-2024*	*besselingmi*			*Jan Tinbergenstraat 193*	JB18 internal	Drawing No.	*+HPP-JB18*
				Approved:			Ref: *P242068, B242352*	Quote:	*7559 SP Hengelo*		*2011280786-001000-24*	Scale: *1 mm : 1 mm / A3*
Index	Revision	Date	name	Changed:			Order: *2011280786*	Item: *001000*	*The Netherlands*		Refer to protection notice ISO 16016	Sheet: *68.2*

KANON LOADING EQUIPMENT
www.kanon.nl

Parts list

Row	Qty.	{}▲ SAP	Free issue	▲1 part of	▲2 name	▲3 Description	part number manufactu…	manufacturer
1	1	**286138**		+HPP -JB18		8146A-041 Empty enclosure Ex e Polyester resin Glass fibre reinforced		R. STAHL
2	1	**137970**		+HPP -JB18		mounting rail TS35 in enclosure 8146 for terminals length: 133mm		R. STAHL
3	1	**229917**		+HPP -JB18	-A20BK	8161/7-M20-1304 Cable gland M20 4 ... 13 mm Unarmoured cable types , Polyamide , Black		R. STAHL
4	1	**110865**		+HPP -JB18 -A20BK		Nut M20x1,5 Ms nickel plated	10063143	WISKA
5	1	**229917**		+HPP -JB18	-A20BK	8161/7-M20-1304 Cable gland M20 4 ... 13 mm Unarmoured cable types , Polyamide , Black		R. STAHL
6	1	**110865**		+HPP -JB18 -A20BK		Nut M20x1,5 Ms nickel plated	10063143	WISKA
7	1	**229917**		+HPP -JB18	-A20BK	8161/7-M20-1304 Cable gland M20 4 ... 13 mm Unarmoured cable types , Polyamide , Black		R. STAHL
8	1	**110865**		+HPP -JB18 -A20BK		Nut M20x1,5 Ms nickel plated	10063143	WISKA
9	1	**245531**		+HPP -JB18	-Ex label	Marking KDE 8146/1 ATEX/IEC		R. STAHL
10	1	**112591**		+HPP -JB18 -X18		End plate D-ST 2,5 Width : 2,200 mm, Grey	3030417	PHOENIX
11	1	**113066**		+HPP -JB18 -X18		Jumper FBS 3-5	3030174	PHOENIX
12	2	**112434**		+HPP -JB18 -X18		end bracket CLIPFIX 35	3022218	PHOENIX
13	4	**219442**		+HPP -JB18 -X18	1...4	PT 2,5 Terminal block , Grey	3209510	PHOENIX
14	4	**257740**		+HPP -JB18 -X18	PE	PT 2,5-PE Protective conductor terminal , Green-yellow	3209536	PHOENIX

Index	Revision	Date	name
2	Final as built	19-3-2025	M.Besseling
2	For approval	13-11-2024	besselingmi
2			

Drawn: 31-10-2024 elshofjo
Engineer: 19-9-2024 besselingmi
Approved:
Changed:

KANON LOADING EQUIPMENT B.V.

Ref: P242068, B242352 Quote:
Order: 2011280786 Item: 001000

KANON LOADING EQUIPMENT
www.kanon.nl

Electromach BV
Jan Tinbergenstraat 193
7559 SP Hengelo
The Netherlands

Parts list
JB18

Int. Revision :
Drawing No.: 2011280786-001000-24
Refer to protection notice ISO 16016

P242068A91
+HPP-JB18
Scale: 1 mm : 1 mm / A3
Sheet: 68.3 page 1 / 1

List of nameplates

Part of	Designation	Text 1	Text 2	Text 3	Material	Width	Height	Fixing	Char. Height	Backgr. Color	Letter Color
+HPP -JB18		JB18	P242068A91		plastic	41,00 mm	20,00 mm	screwed	5 / 3 mm	White	Black

2	Final as built	19-3-2025	M.Besseling	Drawn:	31-10-2024	elshofjo	KANON LOADING EQUIPMENT B.V.		KANON LOADING EQUIPMENT	Electromach BV	List of nameplates
2	For approval	13-11-2024	besselingmi	Engineer:	19-9-2024	besselingmi			www.kanon.nl	Jan Tinbergenstraat 193	JB18
2				Approved:			Ref: P242068, B242352	Quote:		7559 SP Hengelo	
Index	Revision	Date	name	Changed:			Order: 2011280786	Item: 001000		The Netherlands US	

Int. Revision :	P242068A91
Drawing No.:	+HPP-JB18
2011280786-001000-24	Scale: 1 mm : 1 mm / A3
Refer to protection notice ISO 16016	Sheet: 68.4 page 1 / 1

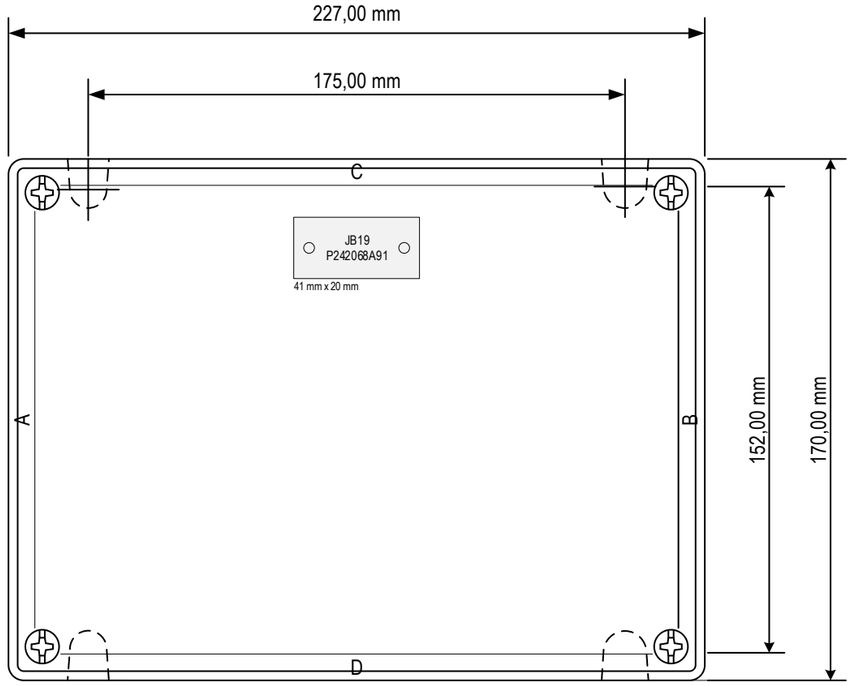

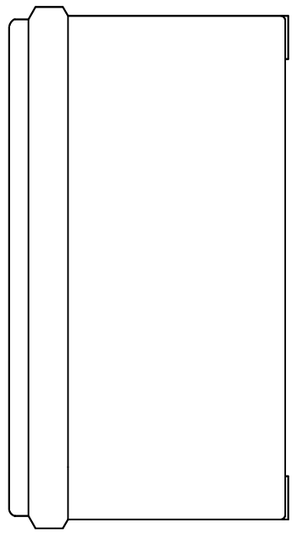

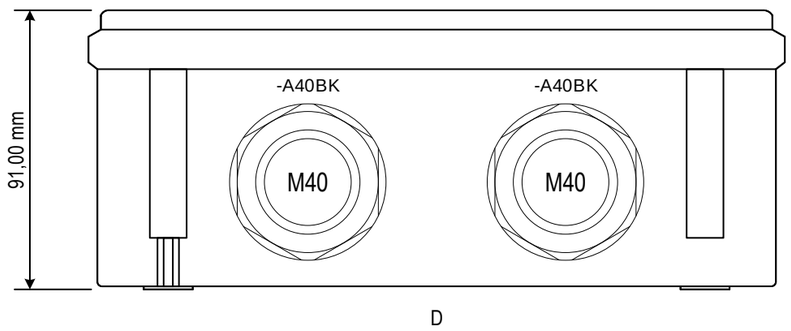

Type designation:	8146/1061
ATEX certificate:	PTB 01 ATEX 1016
ATEX Explosion protection:	II 2 G Ex eb IIC T5 Gb
IECEx certificate:	IECEx PTB 06.0046
IECEx Explosion protection:	Ex eb IIC T5 Gb
Further certificate:	NA
Further Explosion protection:	NA
PESO certificate:	NA
Degree of protection:	IP66
Ambient temperature:	Ta -20°C...+55°C
Rated Voltage:	352V
Connection cross-section	2,5mm²
Rated current	21A
Rated frequency:	NA
Material labels:	Polyester foil
Fixing labels:	Adhesive label
Nice label number:	138052

Index	Revision	Date	name							
2	Final as built	19-3-2025	M.Besseling	Drawn:	31-10-2024	elshofjo	**KANON LOADING EQUIPMENT B.V.**			
1	For approval	13-11-2024	besselingmi	Engineer:	19-9-2024	besselingmi				
				Approved:			Ref: P242068, B242352	Quote:		
				Changed:			Order: 2011280786	Item: 001000		

KANON LOADING EQUIPMENT
www.kanon.nl

Electromach B.V.
Jan Tinbergenstraat 193
7559 SP Hengelo
The Netherlands

Layout
JB19 external

Int. Revision :	P242068A91
Drawing No.	+HPP-JB19
2011280786-001000-24	Scale: 1 mm : 2 mm / A3
Refer to protection notice ISO 16016	Sheet: 69.1

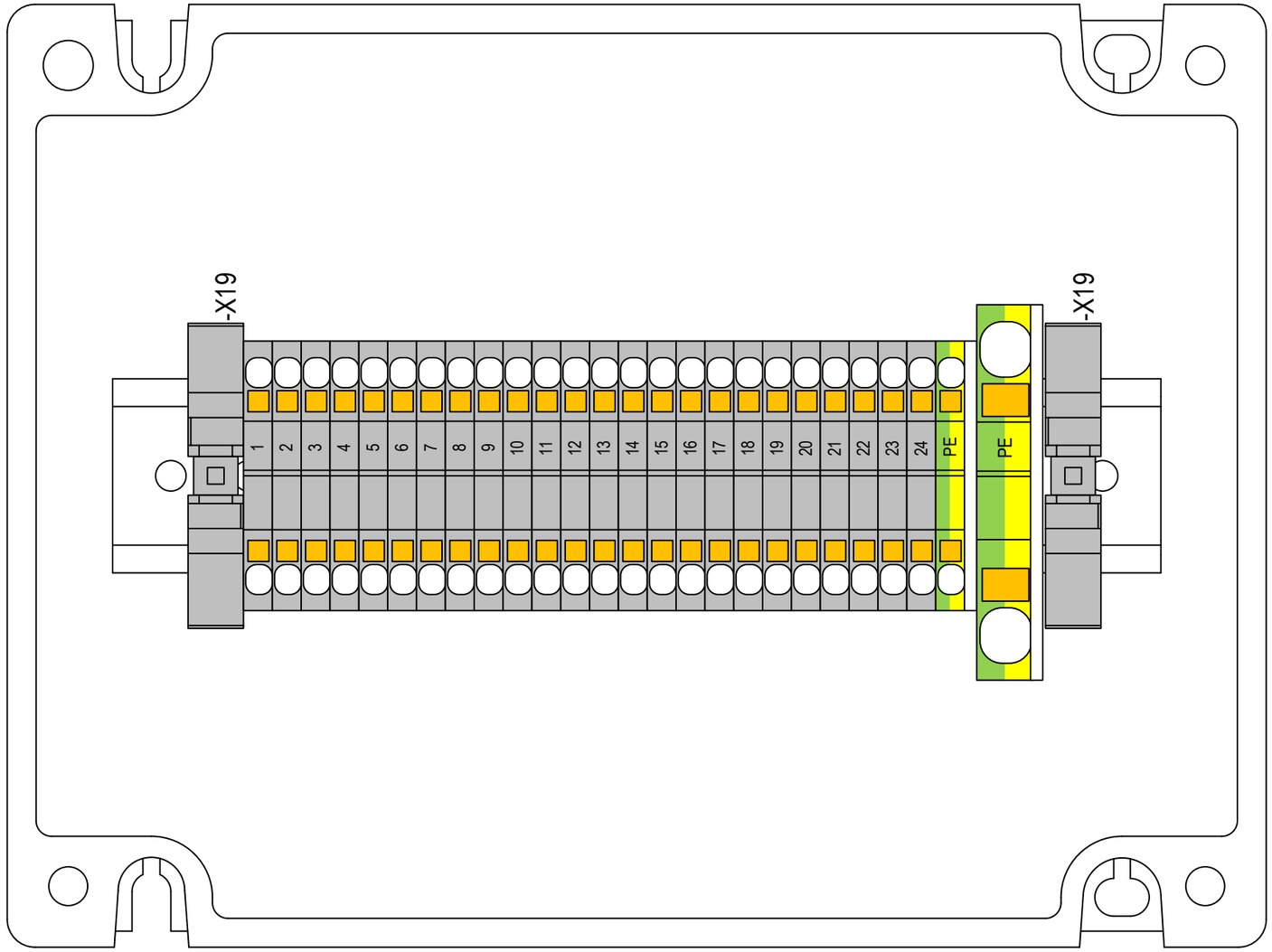

Index	Revision	Date	name			
2	Final as built	19-3-2025	M.Besseling	Drawn:	31-10-2024	elshofjo
1	For approval	13-11-2024	besselingmi	Engineer:	19-9-2024	besselingmi
				Approved:		
				Changed:		

KANON LOADING EQUIPMENT B.V.

Ref: P242068, B242352 Quote:

Order: 2011280786 Item: 001000

KANON LOADING EQUIPMENT

www.kanon.nl

Electromach B.V.
Jan Tinbergenstraat 193
7559 SP Hengelo
The Netherlands
US

Layout
JB19 internal

Int. Revision :	P242068A91
Drawing No.	+HPP-JB19
2011280786-001000-24	Scale: 1 mm : 1 mm / A3
Refer to protection notice ISO 16016	Sheet: 69.2

Parts list

Row	qty.	{}▲ material	Free issue	▲1 part of	▲2 name	▲3 sales text	part number manufacturer	manufacturer
1	1	**286223**		+HPP -JB19		8146A-061 Ex e empty enclosure Polyester resin Glass fibre reinforced		R. STAHL
2	1	**137976**		+HPP -JB19		mounting rail TS35 in enclosure 8146 for terminals length: 189mm		R. STAHL
3	1	**229920**		+HPP -JB19	-A40BK	8161/7-M40-2812 , 12 ... 28 mm Cable gland M40 , Polyamide Black		R. STAHL
4	1	**110871**		+HPP -JB19 -A40BK		Nut M40x1,5 Ms nickel plated	10063146	WISKA
5	1	**229920**		+HPP -JB19	-A40BK	8161/7-M40-2812 , 12 ... 28 mm Cable gland M40 , Polyamide Black		R. STAHL
6	1	**110871**		+HPP -JB19 -A40BK		Nut M40x1,5 Ms nickel plated	10063146	WISKA
7	1	**245531**		+HPP -JB19	-Ex label	Marking KDE 8146/1 ATEX/IEC		R. STAHL
8	1	**257783**		+HPP -JB19 -X19		End plate D-PT 10 Width : 2,200 mm, Grey	3212057	PHOENIX
9	1	**112591**		+HPP -JB19 -X19		End plate D-ST 2,5 Width : 2,200 mm, Grey	3030417	PHOENIX
10	2	**112434**		+HPP -JB19 -X19		end bracket CLIPFIX 35	3022218	PHOENIX
11	24	**219442**		+HPP -JB19 -X19	1...24	PT 2,5 Terminal block , Grey	3209510	PHOENIX
12	1	**257740**		+HPP -JB19 -X19	PE	PT 2,5-PE Protective conductor terminal , Green-yellow	3209536	PHOENIX
13	1	**257775**		+HPP -JB19 -X19	PE	PT 10-PE Protective conductor terminal , Green-yellow	3212131	PHOENIX

Index	Revision	Date	name					
2	Final as built	19-3-2025	M.Besseling	Drawn:	31-10-2024	elshofjo	**KANON LOADING EQUIPMENT B.V.**	
2	For approval	13-11-2024	besselingmi	Engineer:	19-9-2024	besselingmi		
2				Approved:			Ref: P242068, B242352	Quote:
				Changed:			Order: 2011280786	Item: 001000

KANON LOADING EQUIPMENT
www.kanon.nl

Electromach BV
Jan Tinbergenstraat 193
7559 SP Hengelo
The Netherlands
US

Parts list
JB19

Int. Revision :	P242068A91
Drawing No.: 2011280786-001000-24	+HPP-JB19
	Scale: 1 mm : 1 mm / A3
Refer to protection notice ISO 16016	Sheet: 69.3 page 1 / 1

List of nameplates

Part of	Text 1	Text 2	Text 3	Material	Width	Height	Fixing	Char. Height	Backgr. Color	Letter Color
+HPP -JB19	JB19	P242068A91		plastic	41,00 mm	20,00 mm	screwed	5 / 3 mm	White	Black

Index	Revision	Date	name			
2	Final as built	19-3-2025	M.Besseling	Drawn:	31-10-2024	elshofjo
2	For approval	13-11-2024	besselingmi	Engineer:	19-9-2024	besselingmi
2				Approved:		
				Changed:		

KANON LOADING EQUIPMENT B.V.

Ref: P242068, B242352 Quote:
Order: 2011280786 Item: 001000

KANON LOADING EQUIPMENT
www.kanon.nl

Electromach BV
Jan Tinbergenstraat 193
7559 SP Hengelo
The Netherlands

List of nameplates
JB19

Int. Revision :
Drawing No.:
2011280786-001000-24
Refer to protection notice ISO 16016

P242068A91
+HPP-JB19
Scale: 1 mm : 1 mm / A3
Sheet: 69.4 page 1 / 1

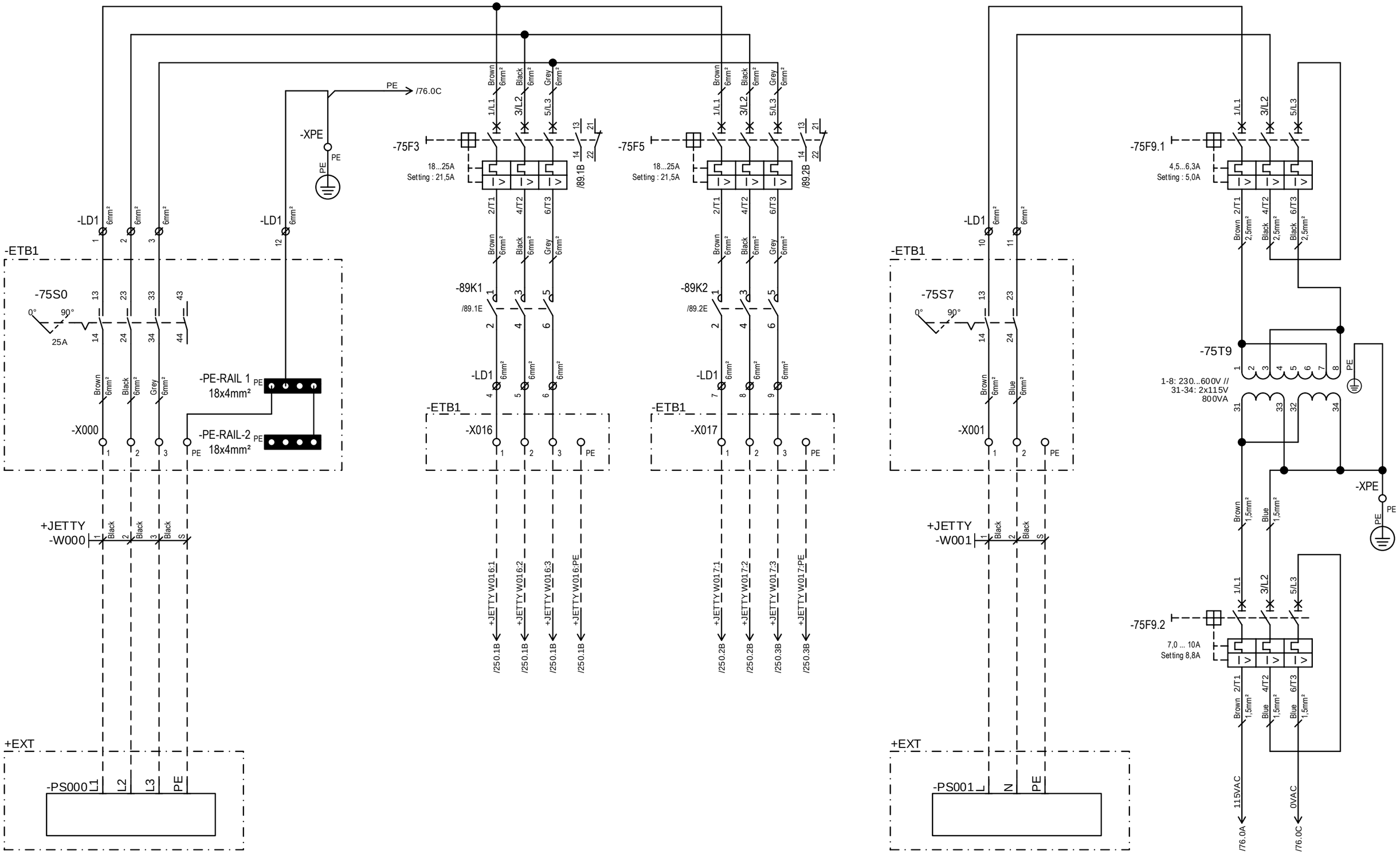

2	Final as built	19-3-2025	M.Besseling	Drawn:	31-10-2024	elshofjo	KANON LOADING EQUIPMENT B.V.	KANON LOADING EQUIPMENT	Electromach B.V.	Circuit diagram	Int. Revision :	P242068A91
1	For approval	13-11-2024	besselingmi	Engineer:	19-9-2024	besselingmi			Jan Tinbergenstraat 193	main power supply	Drawing No.:	+JOCC-DCB1
				Approved:			Ref: P242068, B242352	Quote:	7559 SP Hengelo		2011280786-001000-24	Scale: 1 mm : 1 mm / A3
Index	Revision	Date	name	Changed:			Order: 2011280786	Item: 001000	The Netherlands		Refer to protection notice ISO 16016	Sheet: 75

www.kanon.nl

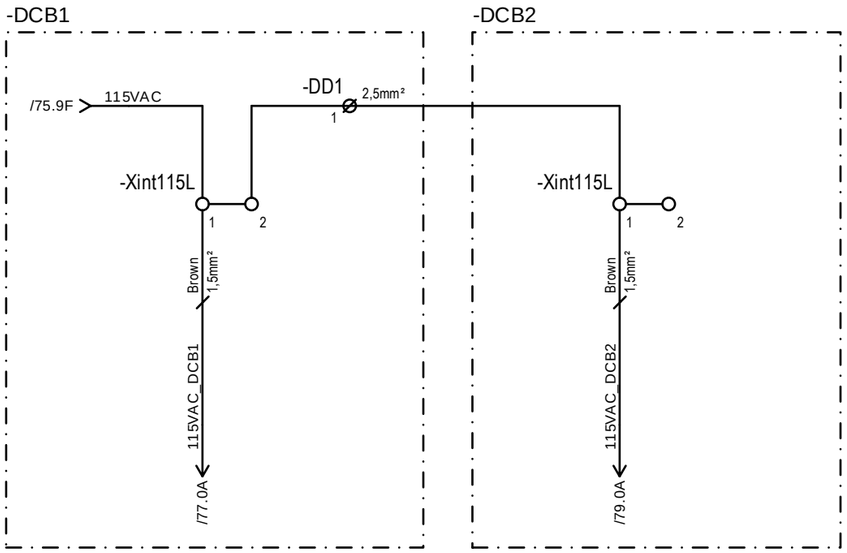

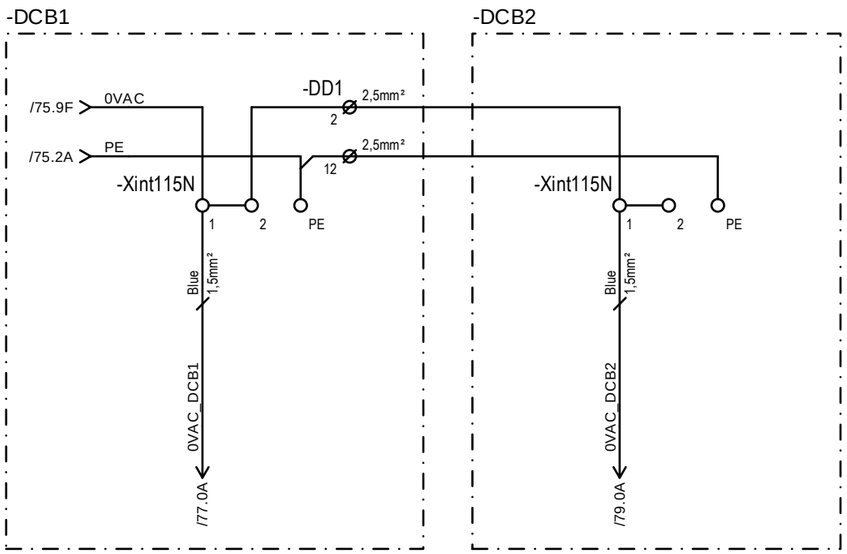

Index	Revision	Date	name						
2	Final as built	19-3-2025	M.Besseling	Drawn:	31-10-2024	elshofjo	**KANON LOADING EQUIPMENT B.V.**		
1	For approval	13-11-2024	besselingmi	Engineer:	19-9-2024	besselingmi			
				Approved:			Ref: P242068, B242352	Quote:	
				Changed:			Order: 2011280786	Item: 001000	

KANON LOADING EQUIPMENT
www.kanon.nl

Electromach B.V.
Jan Tinbergenstraat 193
7559 SP Hengelo
The Netherlands
US

Circuit diagram
distribution 115VAC

Int. Revision :	P242068A91
Drawing No.: 2011280786-001000-24	+JOCC
	Scale: 1 mm : 1 mm / A3
Refer to protection notice ISO 16016	Sheet: 76

115VAC socket
max. 200VA

cabinet heater
DCB1

Control supply
hydraulic pumps

Control supply
24VDC

Control supply
24VDC

/76.1B 115VAC_DCB1

/76.1D 0VAC_DCB1

115VAC_DCB1 /78.0A

0VAC_DCB1 /78.0A

-77F1
C 6A
10kA
30mA

-77F3.1
T 4A 1,5kA

-XintN

-77F4
T 2A

-XintN

-77F6
T 6,3A H

-XintN

-77F8
T 6,3A H

-XintN

Brown 1mm²

Blue 1mm²

-XPE
PE

-77U6.1
AC 100...240V
Setting: 25,0 VDC
20A
DC 24V

-77U8
AC 100...240V
Setting: 25,0 VDC
20A
DC 24V

Red 6mm²

Black 6mm²

-77S3
Setting : 20°C

-Xint11

-77F3.2
Tmax. : 84°C

-77E3
150W

-77X1
115VAC socket
max. 200VA

/89.0A 77F4_L

/89.0E 77F4_N

-77U6.2
Operating mode: In 20A

/134.3B

24VDC /80.0A

0VDC /80.0C

Index	Revision	Date	name				
3	Final as built	19-3-2025	M.Besseling	Drawn:	31-10-2024	elshofjo	
2	Final for production	22-11-2024	besselingmi	Engineer:	19-9-2024	besselingmi	
1	For approval	13-11-2024	besselingmi	Approved:			

KANON LOADING EQUIPMENT B.V.

Ref: P242068, B242352 Quote:

Order: 2011280786 Item: 001000

KANON LOADING EQUIPMENT
www.kanon.nl

Electromach B.V.
Jan Tinbergenstraat 193
7559 SP Hengelo
The Netherlands

Circuit diagram
distribution 115VAC

Int. Revision : P242068A91
Drawing No.: 2011280786-001000-24
+JOCC-DCB1
Scale: 1 mm : 1 mm / A3
Refer to protection notice ISO 16016
Sheet: 77

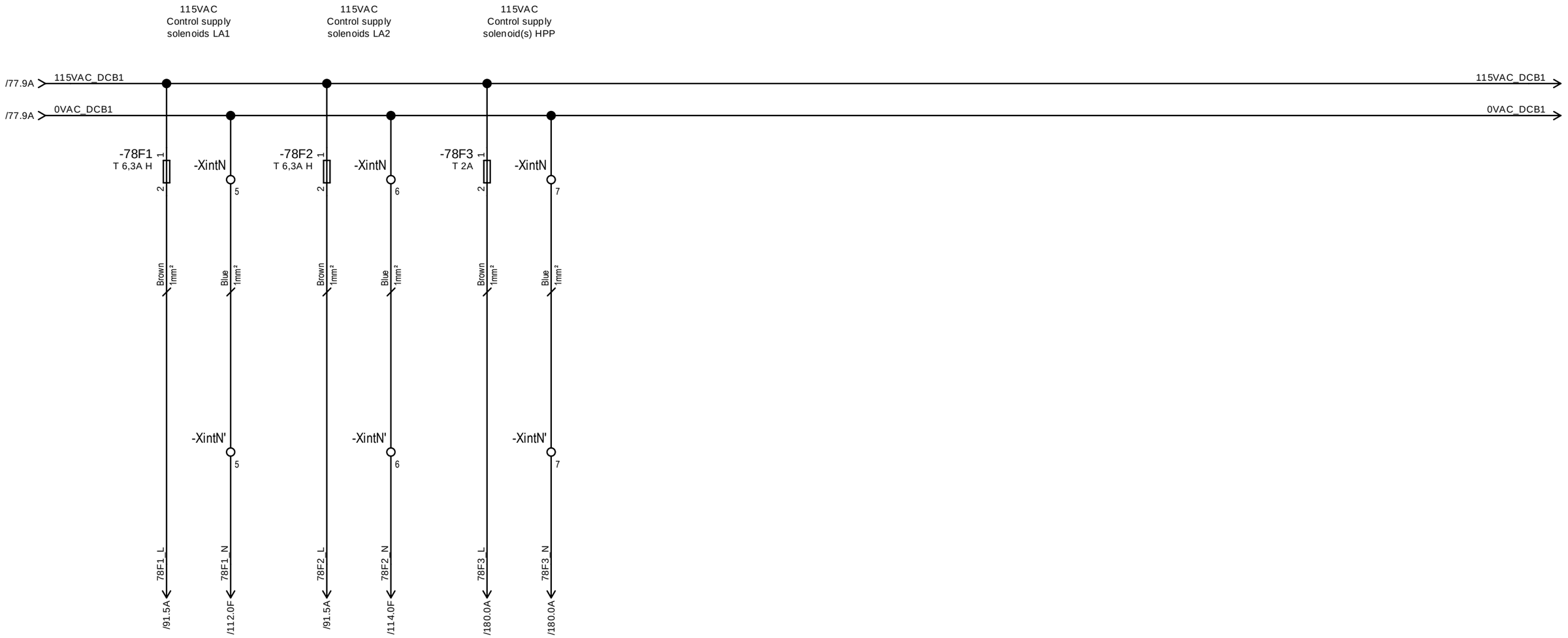

Index	Revision	Date	name
2	Final as built	19-3-2025	M.Besseling
1	For approval	13-11-2024	besselingmi

Drawn:	31-10-2024	elshofjo	
Engineer:	19-9-2024	besselingmi	
Approved:			
Changed:			

KANON LOADING EQUIPMENT B.V.

Ref: P242068, B242352 Quote:

Order: 2011280786 Item: 001000

KANON LOADING EQUIPMENT
www.kanon.nl

Electromach B.V.
Jan Tinbergenstraat 193
7559 SP Hengelo
The Netherlands

Circuit diagram
distribution 115VAC

Int. Revision :	P242068A91
Drawing No.:	+JOCC-DCB1
2011280786-001000-24	Scale: 1 mm : 1 mm / A3
Refer to protection notice ISO 16016	Sheet: 78

cabinet heater
DCB2

spare

/76.2B 115VAC_DCB2

/76.2D 0VAC_DCB2

115VAC_DCB2

0VAC_DCB2

-79F1.1
T 4A 1,5kA

-XintN

-79F3
T 2A

-XintN

Brown 1mm²

Blue 1mm²

-79S1
Setting : 20°C

Black 1mm²

-Xint12

-79F1.2
Tmax. : 84°C

-Xint12

Black 1mm²

-79E1
150W

-XPE

PE

PE

Index	Revision	Date	name
2	Final as built	19-3-2025	M.Besseling
1	For approval	13-11-2024	besselingmi

Drawn:	31-10-2024	elshofjo	
Engineer:	19-9-2024	besselingmi	
Approved:			
Changed:			

KANON LOADING EQUIPMENT B.V.

Ref: P242068, B242352 Quote:

Order: 2011280786 Item: 001000

KANON LOADING EQUIPMENT
www.kanon.nl

Electromach B.V.
Jan Tinbergenstraat 193
7559 SP Hengelo
The Netherlands

Circuit diagram
distribution 115VAC

Int. Revision : P242068A91

Drawing No.: +JOCC-DCB2

2011280786-001000-24

Scale: 1 mm : 1 mm / A3

Refer to protection notice ISO 16016

Sheet: 79

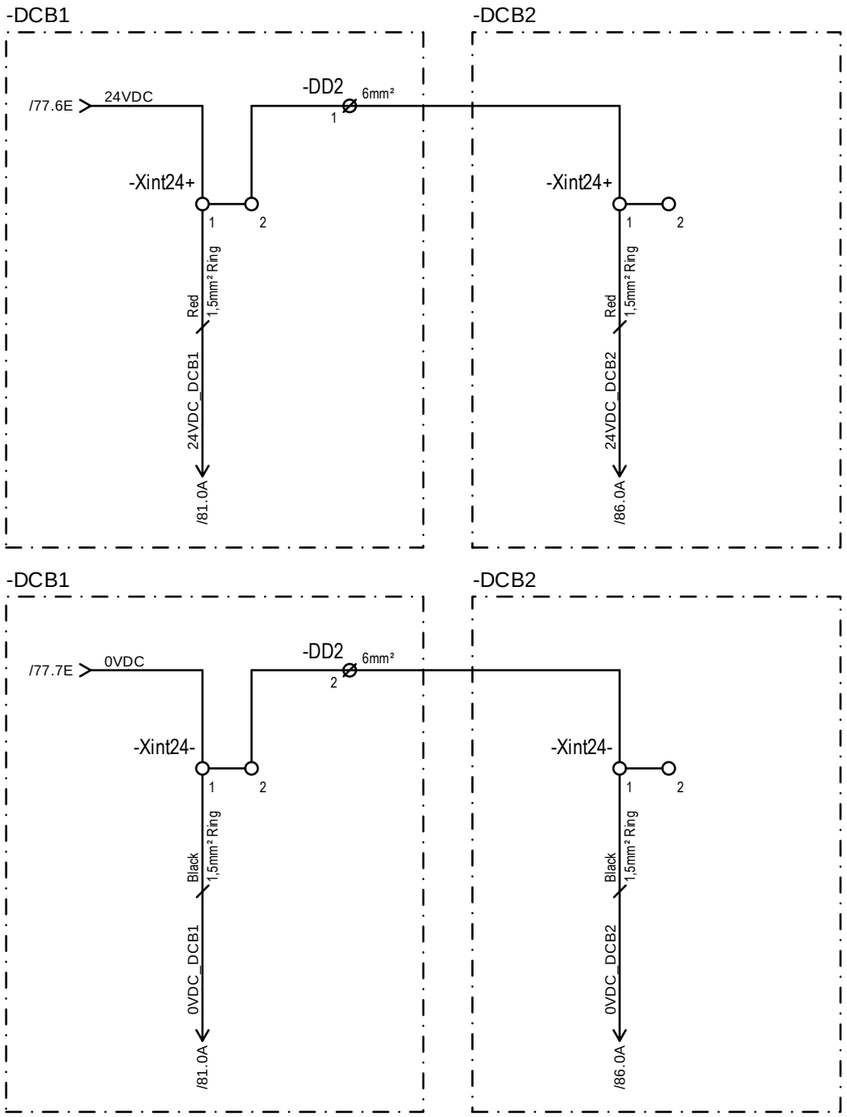

Index	Revision	Date	name
2	Final as built	19-3-2025	M.Besseling
1	For approval	13-11-2024	besselingmi

Drawn:	31-10-2024	elshofjo	
Engineer:	19-9-2024	besselingmi	
Approved:			
Changed:			

KANON LOADING EQUIPMENT B.V.

Ref:	P242068, B242352	Quote:	
Order:	2011280786	Item:	001000

KANON LOADING EQUIPMENT
www.kanon.nl

Electromach B.V.
Jan Tinbergenstraat 193
7559 SP Hengelo
The Netherlands
US

Circuit diagram
distribution 24VDC

Int. Revision :	P242068A91
Drawing No.: 2011280786-001000-24	+JOCC
Refer to protection notice ISO 16016	Scale: 1 mm : 1 mm / A3
	Sheet: 80

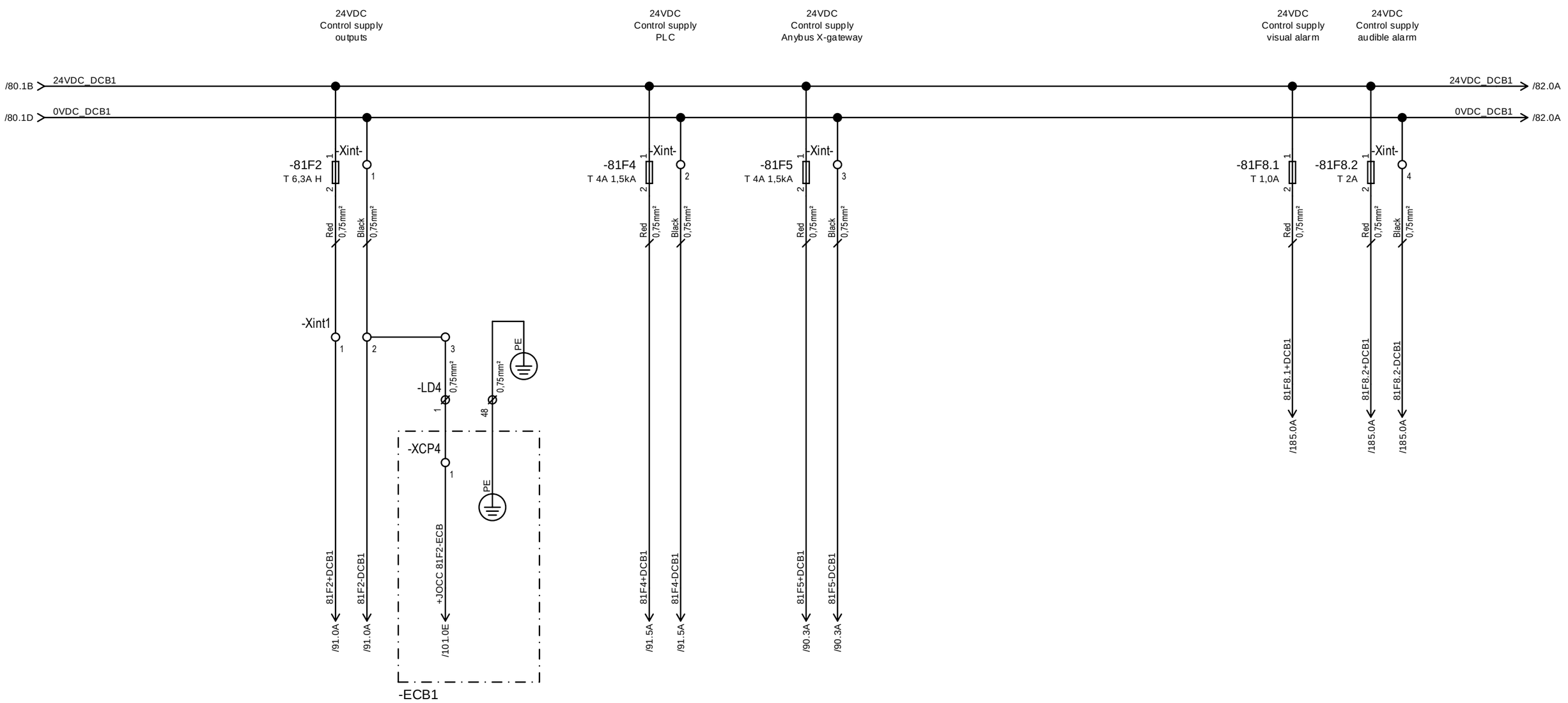

Index	Revision	Date	name	Drawn:	Engineer:	Approved:	Changed:
2	Final as built	19-3-2025	M.Besseling	31-10-2024	19-9-2024		
1	For approval	13-11-2024	besselingmi	elshofjo	besselingmi		

KANON LOADING EQUIPMENT B.V.

Ref: P242068, B242352 | Quote:
Order: 2011280786 | Item: 001000

KANON LOADING EQUIPMENT
www.kanon.nl

Electromach B.V.
Jan Tinbergenstraat 193
7559 SP Hengelo
The Netherlands

Circuit diagram
distribution 24VDC

Int. Revision :	P242068A91
Drawing No.:	+JOCC-DCB1
2011280786-001000-24	Scale: 1 mm : 1 mm / A3
Refer to protection notice ISO 16016	Sheet: 81

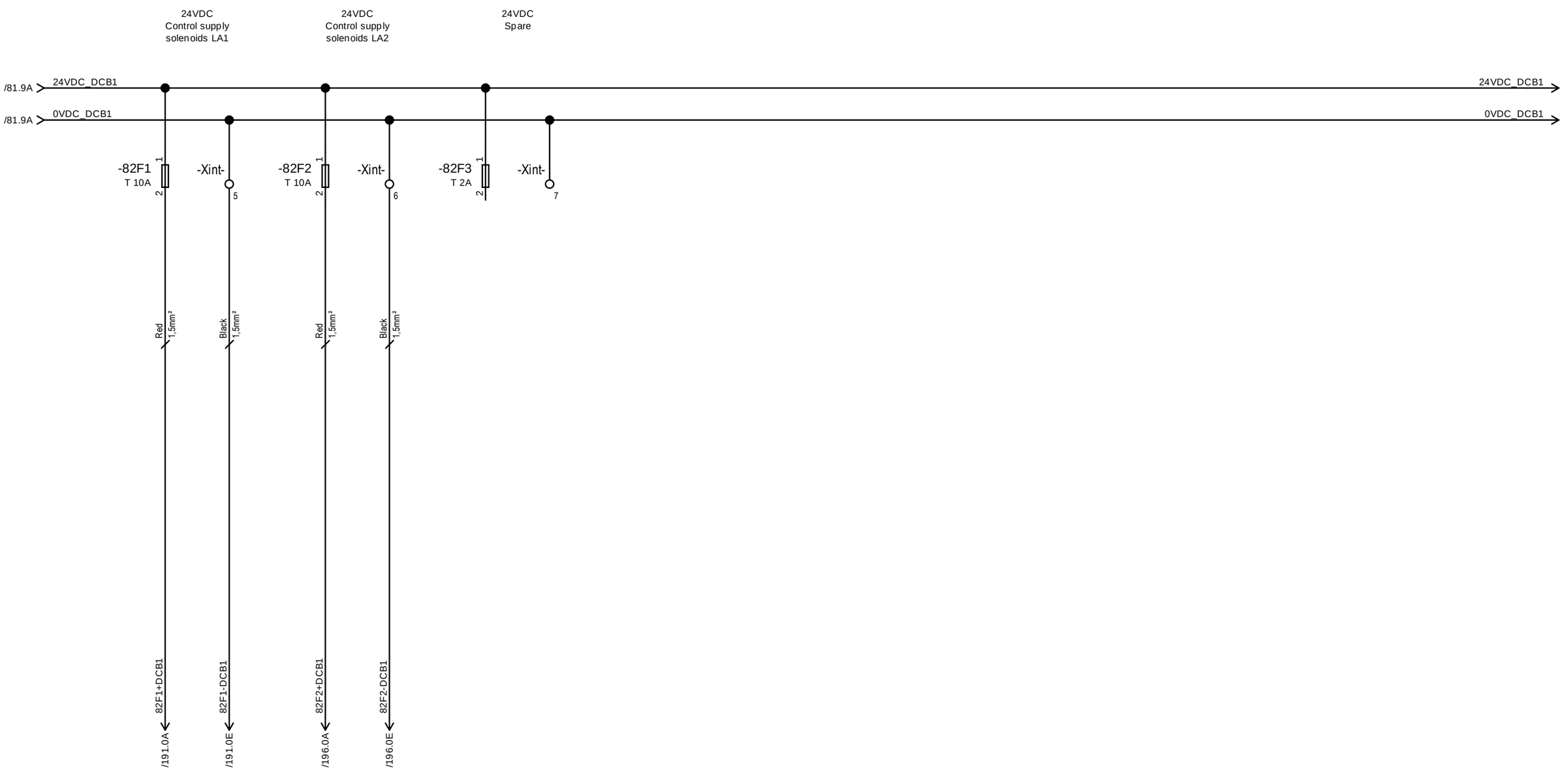

Index	Revision	Date	name							
2	Final as built	19-3-2025	M.Besseling	Drawn:	31-10-2024	elshofjo	**KANON LOADING EQUIPMENT B.V.**		**Electromach B.V.** Jan Tinbergenstraat 193 7559 SP Hengelo The Netherlands	Circuit diagram distribution 24VDC	Int. Revision :	P242068A91
1	For approval	13-11-2024	besselingmi	Engineer:	19-9-2024	besselingmi					Drawing No.:	+JOCC-DCB1
				Approved:			Ref: P242068, B242352	Quote:			2011280786-001000-24	Scale: 1 mm : 1 mm / A3
				Changed:			Order: 2011280786	Item: 001000	www.kanon.nl		Refer to protection notice ISO 16016	Sheet: 82

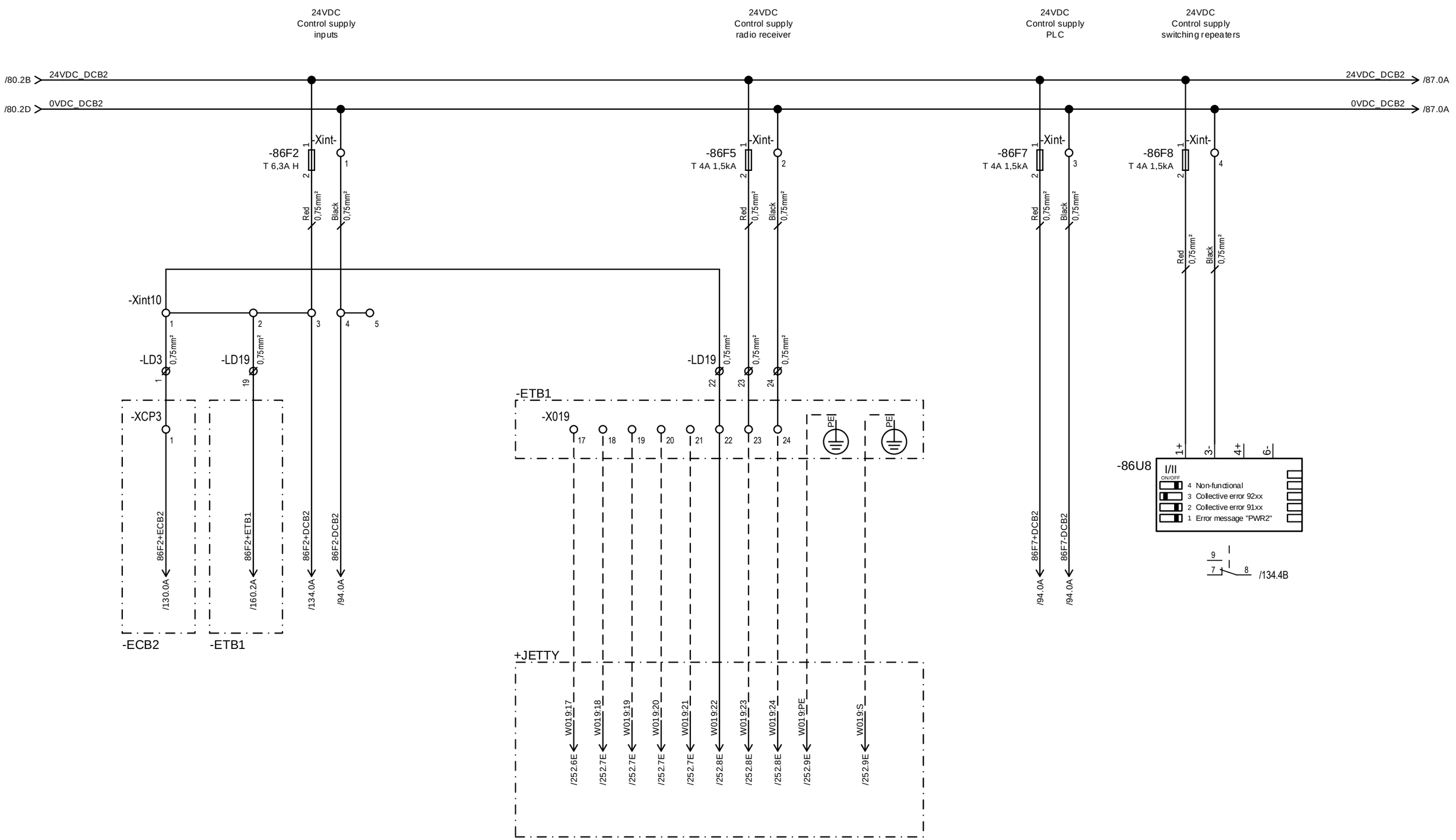

Index	Revision	Date	name	Changed:		
3	Final as built	19-3-2025	M.Besseling	Drawn:	31-10-2024	elshofjo
2	Final for production	22-11-2024	besselingmi	Engineer:	19-9-2024	besselingmi
1	For approval	13-11-2024	besselingmi	Approved:		

KANON LOADING EQUIPMENT B.V.

Ref: P242068, B242352 | Quote:
Order: 2011280786 | Item: 001000

KANON LOADING EQUIPMENT
www.kanon.nl

Electromach B.V.
Jan Tinbergenstraat 193
7559 SP Hengelo
The Netherlands

Circuit diagram
distribution 24VDC

Int. Revision :	P242068A91
Drawing No.: 2011280786-001000-24	+JOCC-DCB2
Refer to protection notice ISO 16016	Scale: 1 mm : 1 mm / A3
	Sheet: 86

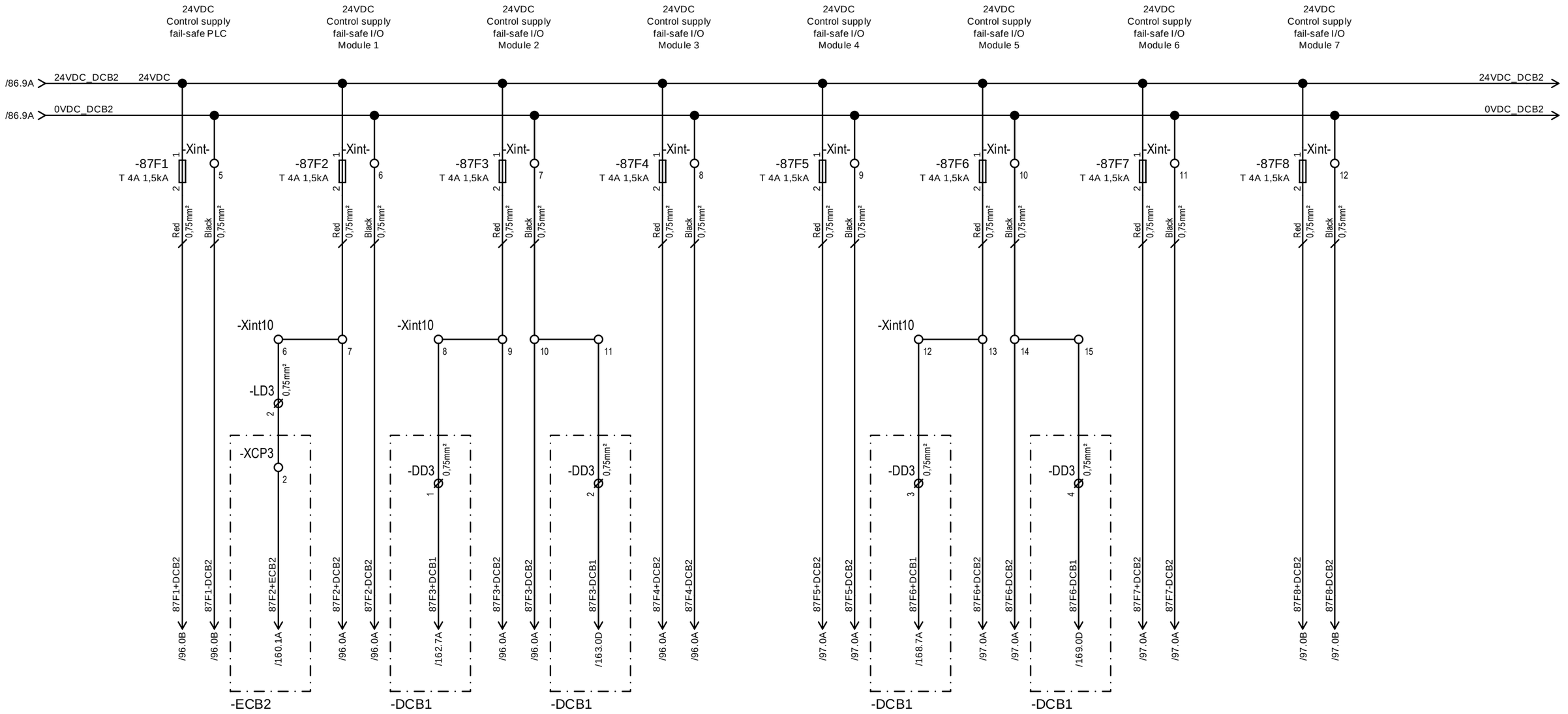

Index	Revision	Date	name								
2	Final as built	19-3-2025	M.Besseling	Drawn:	31-10-2024	elshofjo	**KANON LOADING EQUIPMENT B.V.**				
1	For approval	13-11-2024	besselingmi	Engineer:	19-9-2024	besselingmi					
				Approved:			Ref: P242068, B242352	Quote:			
				Changed:			Order: 2011280786	Item: 001000			

KANON LOADING EQUIPMENT
www.kanon.nl

Electromach B.V.
Jan Tinbergenstraat 193
7559 SP Hengelo
The Netherlands

Circuit diagram distribution 24VDC

Int. Revision :	P242068A91
Drawing No.: 2011280786-001000-24	+JOCC-DCB2
	Scale: 1 mm : 1 mm / A3
Refer to protection notice ISO 16016	Sheet: 87

HPP
Hydraulic pump 1

HPP
Hydraulic pump 2

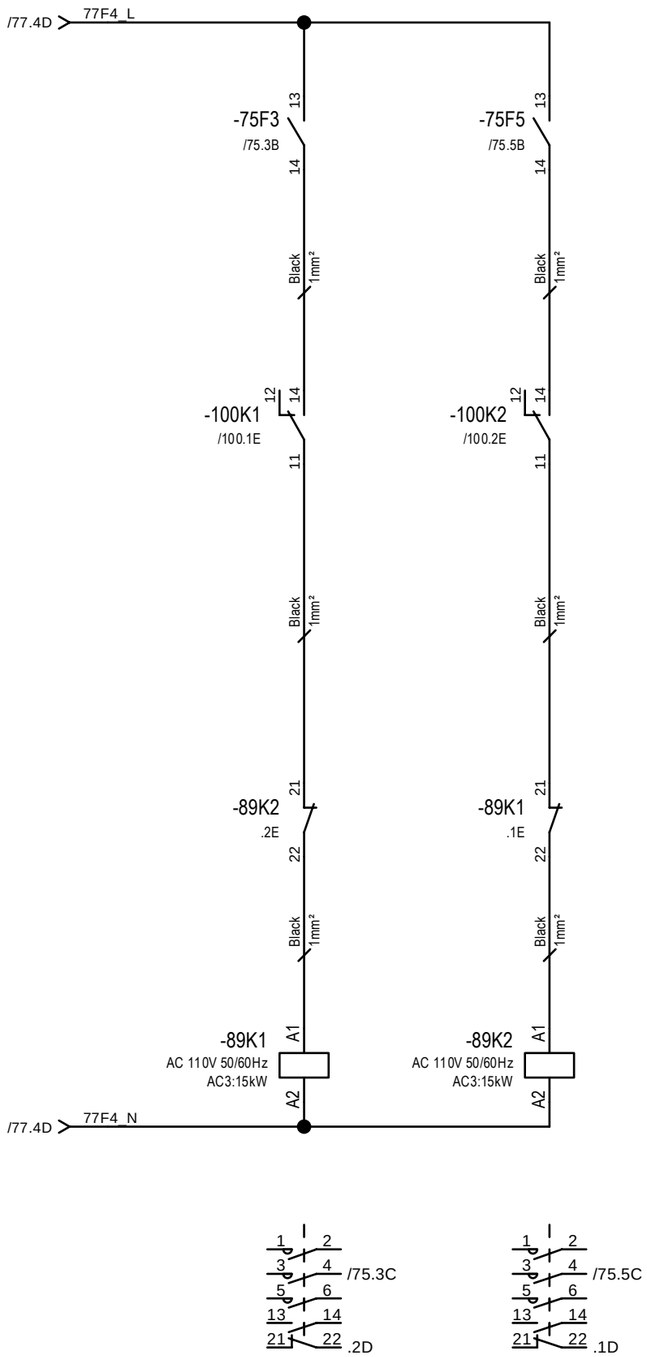

2	*Final as built*	*19-3-2025*	*M.Besseling*	Drawn:	*31-10-2024*	*elshofjo*	**KANON LOADING EQUIPMENT B.V.**		**Electromach B.V.** *Jan Tinbergenstraat 193* *7559 SP Hengelo* *The Netherlands*	*Circuit diagram* *control hydraulic pumps*	Int. Revision : *P242068A91*
1	*For approval*	*13-11-2024*	*besselingmi*	Engineer:	*19-9-2024*	*besselingmi*					Drawing No.: *+JOCC-DCB1*
				Approved:			Ref: *P242068, B242352*	Quote:			*2011280786-001000-24* Scale: *1 mm : 1 mm / A3*
Index	Revision	Date	name	Changed:			Order: *2011280786*	Item: *001000*	*www.kanon.nl*		Refer to protection notice ISO 16016 Sheet: *89*

/81.5D 81F5+DCB1

/81.5D 81F5-DCB1

+

-

-90U3

ABC4090

HMS

Port 2.1 Port 2.2

Port 3.1 Port 3.2

-90U3
Port 3.1

Connector view from front

1 .. Pin ... 8

	Color		Signal	PIN
1		YE	TX+	1
2		OG	TX-	2
3		WH	RX+	3
6		-		4
5		-		5
6		BU	RX-	6
7		-		7
8		-		8

-LDETH3

YE OG WH BU

-ETB1

-Xcom

1 2 3 4

+JETTY
-WCOM

1 2 3 4

+EXT

-CLIENT

Modbus TCP/IP to/from client

-90U3
Port 2.1

Connector view from front

1 .. Pin ... 8

PIN	Signal	Color	
1		-	1
2		-	2
3		-	3
4		-	4
5		-	5
6		-	6
7		-	7
8		-	8

-90U8
Port 2

Connector view from front

1 .. Pin ... 8

	Color		Signal	PIN
1		-	-	1
2		-	-	2
3		-	-	3
6		-	-	4
5		-	-	5
6		-	-	6
7		-	-	7
8		-	-	8

-90U3
Port 2.2

Connector view from front

1 .. Pin ... 8

PIN	Signal	Color	
1	TX+	YE	1
2	TX-	OG	2
3	RX+	WH	3
4		-	4
5		-	5
6	RX-	BU	6
7		-	7
8		-	8

-LDETH1

YE OG WH BU

-ECB1

-XETH

1 2 3 4

XETH-1 /93.1E

XETH-2 /93.1E

XETH-3 /93.1E

XETH-4 /93.1F

Chassis : 1
Slot : 0

-90U8

1769-L30ER

ROCKWELL

Port 1 Port 2

Index	Revision	Date	name
2	Final as built	19-3-2025	M.Besseling
1	For approval	13-11-2024	besselingmi

Drawn: 31-10-2024 elshofjo
Engineer: 19-9-2024 besselingmi
Approved:
Changed:

KANON LOADING EQUIPMENT B.V.

Ref: P242068, B242352 Quote:
Order: 2011280786 Item: 001000

KANON LOADING EQUIPMENT
www.kanon.nl

Electromach B.V.
Jan Tinbergenstraat 193
7559 SP Hengelo
The Netherlands
US

Circuit diagram
PLC Rack 1 layout

Int. Revision : P242068A91
Drawing No.: +JOCC-DCB1
2011280786-001000-24
Scale: 1 mm : 1 mm / A3
Refer to protection notice ISO 16016
Sheet: 90

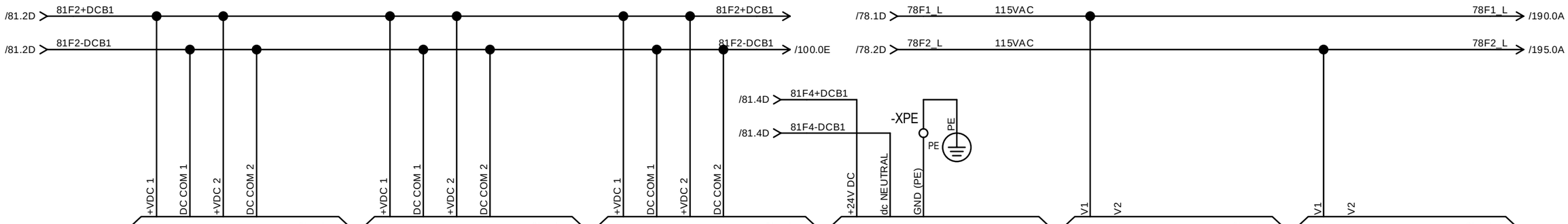

Chassis : 1 Slot : 1

-91U1

1769-OB32

/100.1B	OUT 0	DO_HPP_PUMP1_ON
/100.2B	OUT 1	DO_HPP_PUMP2_ON
/100.3B	OUT 2	DO_HPP_SOL_Y10_SLOW
/100.4B	OUT 3	DO_HPP_SOL_Y15_UP
/100.5B	OUT 4	DO_CP_ALM_VISUAL
/100.6B	OUT 5	DO_CP_ALM_AUDIBLE
/100.7B	OUT 6	DO_CP_PFC_COM_ALM
/100.8B	OUT 7	DO_CP_PFC_SPARE
/101.1B	OUT 8	DO_CP_LMP_PWR_ON
/101.2B	OUT 9	DO_CP_LMP_LO_LVL_ALM
/101.3B	OUT 10	DO_CP_LMP_LO_PRESS_ALM
/101.4B	OUT 11	DO_CP_LMP_COM_FUSE_ALM
/101.5B	OUT 12	DO_CP_LMP_MNVR_ERC_AMD
/101.6B	OUT 13	DO_CP_LMP_SOL_FB_FAIL
/101.7B	OUT 14	DO_SPARE
/101.8B	OUT 15	DO_CP_LMP_AUTO_ACT
/102.1B	OUT 16	DO_CP_LMP_ERC_T_FL
/102.2B	OUT 17	DO_SPARE
/102.3B	OUT 18	DO_SPARE
/102.4B	OUT 19	DO_SPARE
/102.5B	OUT 20	DO_SPARE
/102.6B	OUT 21	DO_SPARE
/102.7B	OUT 22	DO_SPARE
/102.8B	OUT 23	DO_SPARE
/103.1B	OUT 24	DO_SPARE
/103.2B	OUT 25	DO_SPARE
/103.3B	OUT 26	DO_SPARE
/103.4B	OUT 27	DO_SPARE
/103.5B	OUT 28	DO_SPARE
/103.6B	OUT 29	DO_SPARE
/103.7B	OUT 30	DO_SPARE
/103.8B	OUT 31	DO_SPARE

Chassis : 1 Slot : 2

-91U2

1769-OB32

/104.1B	OUT 0	DO_1_LMP_ARM_IN_ALM
/104.2B	OUT 1	DO_1_LMP_MAN_ERC_ALM
/104.3B	OUT 2	DO_1_LMP_FRW
/104.4B	OUT 3	DO_1_LMP_MNVR
/104.5B	OUT 4	DO_1_LMP_ERC_ARMED
/104.6B	OUT 5	DO_1_LMP_ERC_DISARMED
/104.7B	OUT 6	DO_1_LMP_VESSEL_CONNECTED
/104.8B	OUT 7	DO_1_LMP_VESSEL_DISCONNECTED
/105.1B	OUT 8	DO_1_LMP_LOCKED
/105.2B	OUT 9	DO_1_LMP_ERS_VLV_OPND
/105.3B	OUT 10	DO_1_LMP_ERS_VLV_CLSD
/105.4B	OUT 11	DO_1_LMP_ERC_AVBL
/105.5B	OUT 12	DO_1_LMP_ERC_TEST_ND
/105.6B	OUT 13	DO_SPARE
/105.7B	OUT 14	DO_SPARE
/105.8B	OUT 15	DO_SPARE
/106.1B	OUT 16	DO_1_PFC_PRE_ALM
/106.2B	OUT 17	DO_1_PFC_LOAD_PERM
/106.3B	OUT 18	DO_1_PFC_ERC_ALM
/106.4B	OUT 19	DO_SPARE
/106.5B	OUT 20	DO_SPARE
/106.6B	OUT 21	DO_SPARE
/106.7B	OUT 22	DO_SPARE
/106.8B	OUT 23	DO_SPARE
/107.1B	OUT 24	DO_1_ERS_RV1_OPN
/107.2B	OUT 25	DO_1_ERS_RV2_OPN
/107.3B	OUT 26	DO_1_SOL_Y9_MNVR
/107.4B	OUT 27	DO_SPARE
/107.5B	OUT 28	DO_SPARE
/107.6B	OUT 29	DO_SPARE
/107.7B	OUT 30	DO_SPARE
/107.8B	OUT 31	DO_SPARE

Chassis : 1 Slot : 3

-91U3

1769-OB32

/108.1B	OUT 0	DO_2_LMP_ARM_IN_ALM
/108.2B	OUT 1	DO_2_LMP_MAN_ERC_ALM
/108.3B	OUT 2	DO_2_LMP_FRW
/108.4B	OUT 3	DO_2_LMP_MNVR
/108.5B	OUT 4	DO_2_LMP_ERC_ARMED
/108.6B	OUT 5	DO_2_LMP_ERC_DISARMED
/108.7B	OUT 6	DO_2_LMP_VESSEL_CONNECTED
/108.8B	OUT 7	DO_1_LMP_VESSEL_DISCONNECTED
/109.1B	OUT 8	DO_2_LMP_LOCKED
/109.2B	OUT 9	DO_2_LMP_ERS_VLV_OPND
/109.3B	OUT 10	DO_2_LMP_ERS_VLV_CLSD
/109.4B	OUT 11	DO_2_LMP_ERC_AVBL
/109.5B	OUT 12	DO_2_LMP_ERC_TEST_ND
/109.6B	OUT 13	DO_SPARE
/109.7B	OUT 14	DO_SPARE
/109.8B	OUT 15	DO_SPARE
/110.1B	OUT 16	DO_2_PFC_PRE_ALM
/110.2B	OUT 17	DO_2_PFC_LOAD_PERM
/110.3B	OUT 18	DO_2_PFC_ERC_ALM
/110.4B	OUT 19	DO_SPARE
/110.5B	OUT 20	DO_SPARE
/110.6B	OUT 21	DO_SPARE
/110.7B	OUT 22	DO_SPARE
/110.8B	OUT 23	DO_SPARE
/111.1B	OUT 24	DO_2_ERS_RV1_OPN
/111.2B	OUT 25	DO_2_ERS_RV2_OPN
/111.3B	OUT 26	DO_2_SOL_Y9_MNVR
/111.4B	OUT 27	DO_SPARE
/111.5B	OUT 28	DO_SPARE
/111.6B	OUT 29	DO_SPARE
/111.7B	OUT 30	DO_SPARE
/111.8B	OUT 31	DO_SPARE

Chassis : 1

-91U5

1769-PB4

ROCKWELL

Chassis : 1 Slot : 4

-91U6

1769-OW16

/112.1B	OUT 0	DO_1_SOL_Y1_DOWN
/112.2B	OUT 1	DO_1_SOL_Y2_DOWN
/112.3B	OUT 2	DO_1_SOL_Y3_SHORE
/112.4B	OUT 3	DO_1_SOL_Y4_SHIP
/112.5B	OUT 4	DO_1_SOL_Y5_RIGHT
/112.6B	OUT 5	DO_1_SOL_Y6_LEFT
/112.7B	OUT 6	DO_1_SOL_Y11_COUPL_OPN
/112.8B	OUT 7	DO_1_SOL_Y12_COUPL_CLS
/113.1B	OUT 8	DO_SPARE
/113.2B	OUT 9	DO_SPARE
/113.3B	OUT 10	DO_SPARE
/113.4B	OUT 11	DO_SPARE
/113.5B	OUT 12	DO_SPARE
/113.6B	OUT 13	DO_SPARE
/113.7B	OUT 14	DO_SPARE
/113.8B	OUT 15	DO_SPARE

Chassis : 1 Slot : 5

-91U8

1769-OW16

/114.1B	OUT 0	DO_2_SOL_Y1_DOWN
/114.2B	OUT 1	DO_2_SOL_Y2_DOWN
/114.3B	OUT 2	DO_2_SOL_Y3_SHORE
/114.4B	OUT 3	DO_2_SOL_Y4_SHIP
/114.5B	OUT 4	DO_2_SOL_Y5_RIGHT
/114.6B	OUT 5	DO_2_SOL_Y6_LEFT
/114.7B	OUT 6	DO_2_SOL_Y11_COUPL_OPN
/114.8B	OUT 7	DO_2_SOL_Y12_COUPL_CLS
/115.1B	OUT 8	DO_SPARE
/115.2B	OUT 9	DO_SPARE
/115.3B	OUT 10	DO_SPARE
/115.4B	OUT 11	DO_SPARE
/115.5B	OUT 12	DO_SPARE
/115.6B	OUT 13	DO_SPARE
/115.7B	OUT 14	DO_SPARE
/115.8B	OUT 15	DO_SPARE

Index	Revision	Date	name
3	Final as built	19-3-2025	M.Besseling
2	Final for production	22-11-2024	besselingmi
1	For approval	13-11-2024	besselingmi

Drawn:	31-10-2024	elshofjo	
Engineer:	19-9-2024	besselingmi	
Approved:			
Changed:			

KANON LOADING EQUIPMENT B.V.

Ref: P242068, B242352 Quote:

Order: 2011280786 Item: 001000

KANON LOADING EQUIPMENT
www.kanon.nl

Electromach B.V.
Jan Tinbergenstraat 193
7559 SP Hengelo
The Netherlands
US

Circuit diagram
PLC Rack 1 layout

Int. Revision :	P242068A91
Drawing No.:	+JOCC-DCB1
2011280786-001000-24	Scale: 1 mm : 1 mm / A3
Refer to protection notice ISO 16016	Sheet: 91

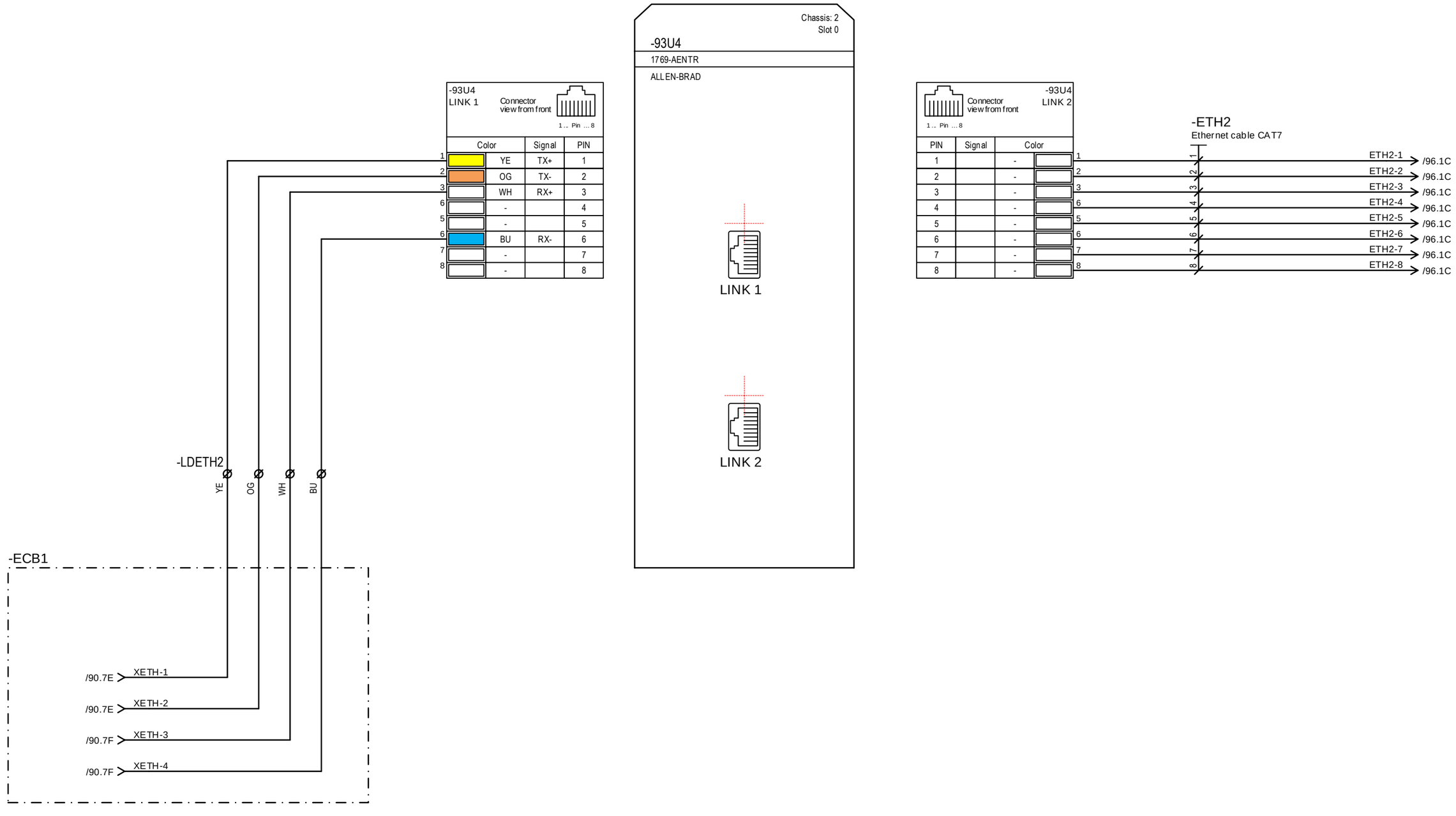

Index	Revision	Date	name						
2	Final as built	19-3-2025	M.Besseling	Drawn:	31-10-2024	elshofjo	**KANON LOADING EQUIPMENT B.V.**		
1	For approval	13-11-2024	besselingmi	Engineer:	19-9-2024	besselingmi			
				Approved:			Ref: P242068, B242352	Quote:	
				Changed:			Order: 2011280786	Item: 001000	

KANON LOADING EQUIPMENT
www.kanon.nl

Electromach B.V.
Jan Tinbergenstraat 193
7559 SP Hengelo
The Netherlands
US

Circuit diagram
PLC Rack 2 layout

Int. Revision :	P242068A91
Drawing No.:	+JOCC-DCB2
2011280786-001000-24	Scale: 1 mm : 1 mm / A3
Refer to protection notice ISO 16016	Sheet: 93

/86.7D 86F7+DCB2 24VDC

/86.7D 86F7-DCB2

/86.2D 86F2-DCB2

-XPE

PE

PE

86F2-DCB2

DC COM 1 | DC COM 2 | DC COM 3 | DC COM 4 | DC COM 1 | DC COM 2 | DC COM 3 | DC COM 4 | +24V DC | dc NEUTRAL | GND (PE) | DC COM 1 | DC COM 2 | DC COM 3 | DC COM 4 | DC COM 1 | DC COM 2 | DC COM 3 | DC COM 4

Chassis: 2 Slot 1

-94U1

1769-IQ32

/130.1E	IN 0	DI_CP_PWR_ON
/130.2E	IN 1	DI_CP_PB_LAMPTEST
/130.3E	IN 2	DI_CP_PB_ACK
/130.4E	IN 3	DI_CP_SEL_CTRL_LOCAL
/130.5E	IN 4	DI_CP_SEL_CTRL_PENDANT
/130.6E	IN 5	DI_CP_SEL_CTRL_RADIO
/130.7E	IN 6	DI_CP_SEL_PUMP_1
/130.8E	IN 7	DI_CP_SEL_PUMP_2
/131.1E	IN 8	DI_CP_PB_UP
/131.2E	IN 9	DI_CP_PB_DOWN
/131.3E	IN 10	DI_CP_PB_SHORE
/131.4E	IN 11	DI_CP_PB_SHIP
/131.5E	IN 12	DI_CP_PB_RIGHT
/131.6E	IN 13	DI_CP_PB_LEFT
/131.7E	IN 14	DI_CP_SEL_FAST
/131.8E	IN 15	DI_CP_PB_FREEW
/132.1E	IN 16	DI_CP_PB_COUPL_OPN
/132.2E	IN 17	DI_CP_PB_COUPL_CLS
/132.3E	IN 18	DI_CP_PB_UP_ERS_OPN
/132.4E	IN 19	DI_CP_PB_UP_ERS_CLS
/132.5E	IN 20	DI_CP_KS_OVERRIDE
/132.6E	IN 21	DI_CP_PB_RST_2ND_ALM
/132.7E	IN 22	DI_CP_PB_RST_1ST_ALM
/132.8E	IN 23	DI_CP_PB_RST_POWER
/133.1E	IN 24	DI_SPARE
/133.2E	IN 25	DI_CP_SEL_MLA_1
/133.3E	IN 26	DI_CP_SEL_MLA_2
/133.4E	IN 27	DI_CP_PB_ERC_TEST
/133.5E	IN 28	DI_SPARE
/133.6E	IN 29	DI_SPARE
/133.7E	IN 30	DI_SPARE
/133.8E	IN 31	DI_SPARE

Chassis: 2 Slot 2

-94U2

1769-IQ32

/134.1E	IN 0	DI_SPARE
/134.2E	IN 1	DI_SPARE
/134.3E	IN 2	DI_24VDC_OKAY
/134.4E	IN 3	DI_SENS_FAIL
/134.5E	IN 4	DI_HPP_LVL_LOW_ALM
/134.6E	IN 5	DI_HPP_PRESS_LOW_ALM1
/134.7E	IN 6	DI_HPP_PRESS_LOW_ALM2
/134.8E	IN 7	DI_HPP_FB_Y15
/135.1E	IN 8	DI_RAD_UP
/135.2E	IN 9	DI_RAD_DOWN
/135.3E	IN 10	DI_RAD_SHORE
/135.4E	IN 11	DI_RAD_SHIP
/135.5E	IN 12	DI_RAD_RIGHT
/135.6E	IN 13	DI_RAD_LEFT
/135.7E	IN 14	DI_RAD_FAST
/135.8E	IN 15	DI_RAD_MNVR
/136.1E	IN 16	DI_RAD_FRW
/136.2E	IN 17	DI_RAD_ERC_COUPL_OP
/136.3E	IN 18	DI_RAD_ERC_COUPL_CL
/136.4E	IN 19	DI_RAD_SEL_MLA_1
/136.5E	IN 20	DI_RAD_SEL_MLA_2
/136.6E	IN 21	DI_RAD_ERS_VLV_OP
/136.7E	IN 22	DI_RAD_ERS_VLV_CL
/136.8E	IN 23	DI_SPARE
/137.1E	IN 24	DI_SPARE
/137.2E	IN 25	DI_SPARE
/137.3E	IN 26	DI_SPARE
/137.4E	IN 27	DI_SPARE
/137.5E	IN 28	DI_SPARE
/137.6E	IN 29	DI_SPARE
/137.7E	IN 30	DI_SPARE
/137.8E	IN 31	DI_SPARE

Chassis: 2

-94U3

1769-PB4

ROCKWELL

Chassis: 2 Slot 3

-94U5

1769-IQ32

/138.1E	IN 0	DI_HPP_PEN_UP
/138.2E	IN 1	DI_HPP_PEN_DOWN
/138.3E	IN 2	DI_HPP_PEN_SHORE
/138.4E	IN 3	DI_HPP_PEN_SHIP
/138.5E	IN 4	DI_HPP_PEN_RIGHT
/138.6E	IN 5	DI_HPP_PEN_LEFT
/138.7E	IN 6	DI_HPP_PEN_COUPL_OPN
/138.8E	IN 7	DI_HPP_PEN_COUPL_CLS
/139.1E	IN 8	DI_HPP_PEN_ERS_VLV_OP
/139.2E	IN 9	DI_HPP_PEN_ERS_VLV_CL
/139.3E	IN 10	DI_HPP_PEN_SLOW
/139.4E	IN 11	DI_HPP_PEN_FREEW
/139.5E	IN 12	DI_SPARE
/139.6E	IN 13	DI_SPARE
/139.7E	IN 14	DI_SPARE
/139.8E	IN 15	DI_SPARE
/140.1E	IN 16	DI_1_VESSEL_CONNECTED
/140.2E	IN 17	DI_1_ERC_SENS_PROD
/140.3E	IN 18	DI_SPARE
/140.4E	IN 19	DI_1_ERS_VALVE_OPN
/140.5E	IN 20	DI_SPARE
/140.6E	IN 21	DI_SPARE
/140.7E	IN 22	DI_SPARE
/140.8E	IN 23	DI_SPARE
/141.1E	IN 24	DI_SPARE
/141.2E	IN 25	DI_SPARE
/141.3E	IN 26	DI_SPARE
/141.4E	IN 27	DI_SPARE
/141.5E	IN 28	DI_SPARE
/141.6E	IN 29	DI_1_PARKLOCK_SENS
/141.7E	IN 30	DI_SPARE
/141.8E	IN 31	DI_SPARE

Chassis: 2 Slot 4

-94U6

1769-IQ32

/142.1E	IN 0	DI_SPARE
/142.2E	IN 1	DI_SPARE
/142.3E	IN 2	DI_SPARE
/142.4E	IN 3	DI_SPARE
/142.5E	IN 4	DI_SPARE
/142.6E	IN 5	DI_SPARE
/142.7E	IN 6	DI_SPARE
/142.8E	IN 7	DI_SPARE
/143.1E	IN 8	DI_2_VESSEL_CONNECTED
/143.2E	IN 9	DI_2_ERC_SENS_PROD
/143.3E	IN 10	DI_SPARE
/143.4E	IN 11	DI_2_ERS_VALVE_OPN
/143.5E	IN 12	DI_SPARE
/143.6E	IN 13	DI_SPARE
/143.7E	IN 14	DI_SPARE
/143.8E	IN 15	DI_SPARE
/144.1E	IN 16	DI_SPARE
/144.2E	IN 17	DI_SPARE
/144.3E	IN 18	DI_SPARE
/144.4E	IN 19	DI_SPARE
/144.5E	IN 20	DI_SPARE
/144.6E	IN 21	DI_2_PARKLOCK_SENS
/144.7E	IN 22	DI_SPARE
/144.8E	IN 23	DI_SPARE
/145.1E	IN 24	DI_SPARE
/145.2E	IN 25	DI_SPARE
/145.3E	IN 26	DI_SPARE
/145.4E	IN 27	DI_SPARE
/145.5E	IN 28	DI_SPARE
/145.6E	IN 29	DI_SPARE
/145.7E	IN 30	DI_SPARE
/145.8E	IN 31	DI_SPARE

Chassis: 2 Slot 5

-94U8

1769-IF8

/146.1E	IN 0	AI_1_PRS_TRM_RSR
/146.2E	IN 1	AI_2_PRS_TRM_RSR
/146.3E	IN 2	AI_SPARE
/146.4E	IN 3	AI_SPARE
/146.5E	IN 4	AI_SPARE
/146.6E	IN 5	AI_SPARE
/146.7E	IN 6	AI_SPARE
/146.8E	IN 7	AI_SPARE

Index	Revision	Date	name			
3	Final as built	19-3-2025	M.Besseling	Drawn:	31-10-2024	elshofjo
2	Final for production	22-11-2024	besselingmi	Engineer:	19-9-2024	besselingmi
1	For approval	13-11-2024	besselingmi	Approved:		
				Changed:		

KANON LOADING EQUIPMENT B.V.

Ref: P242068, B242352 Quote:

Order: 2011280786 Item: 001000

KANON LOADING EQUIPMENT www.kanon.nl

Electromach B.V.
Jan Tinbergenstraat 193
7559 SP Hengelo
The Netherlands
US

Circuit diagram
PLC Rack 2 layout

Int. Revision :	P242068A91
Drawing No.:	+JOCC-DCB2
2011280786-001000-24	Scale: 1 mm : 1 mm / A3
Refer to protection notice ISO 16016	Sheet: 94

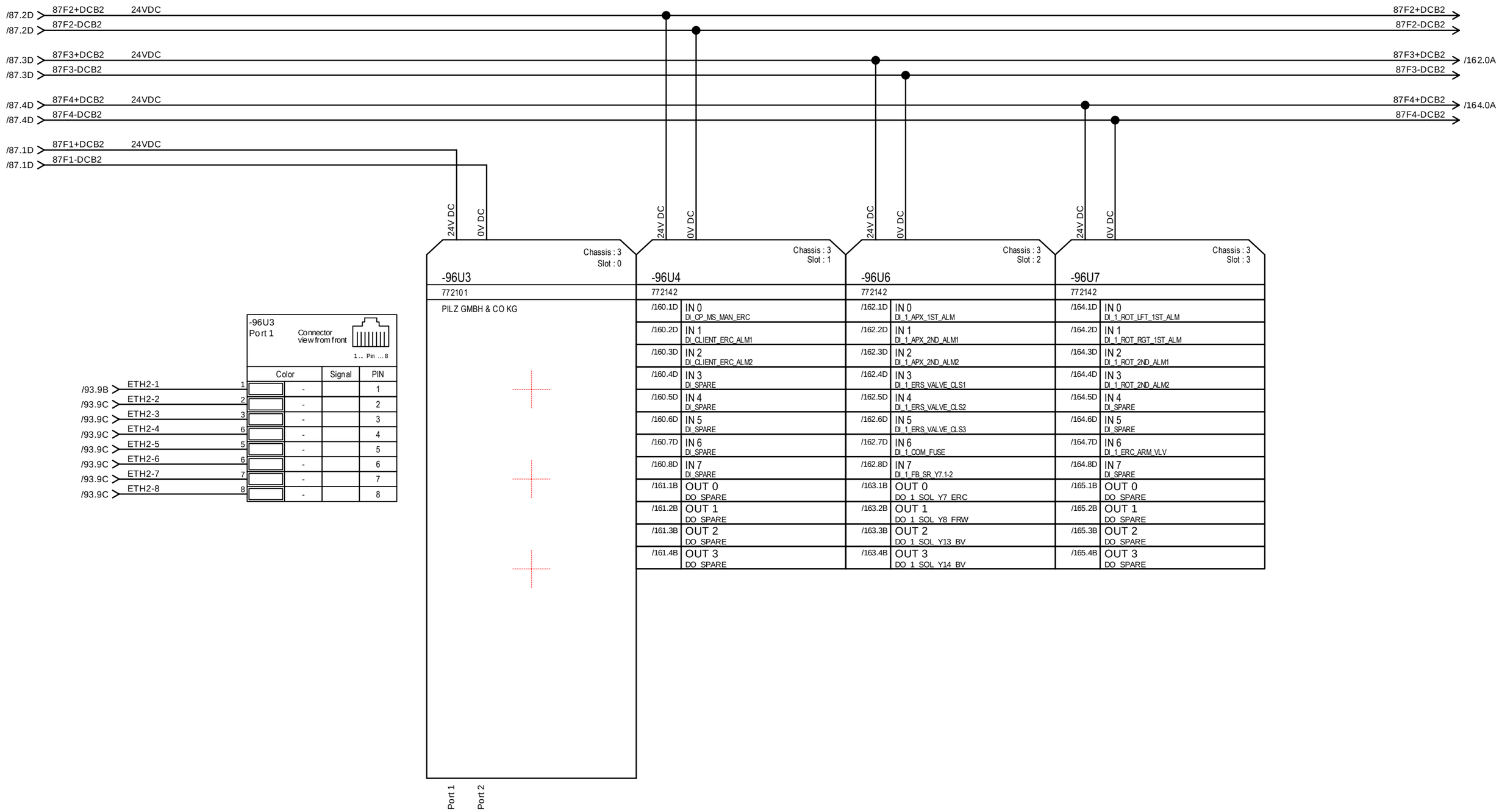

Index	Revision	Date	name			
2	Final as built	19-3-2025	M.Besseling	Drawn:	31-10-2024	elshofjo
1	For approval	13-11-2024	besselingmi	Engineer:	19-9-2024	besselingmi
				Approved:		
				Changed:		

KANON LOADING EQUIPMENT B.V.

Ref: P242068, B242352 Quote:
Order: 2011280786 Item: 001000

KANON LOADING EQUIPMENT
www.kanon.nl

Electromach B.V.
Jan Tinbergenstraat 193
7559 SP Hengelo
The Netherlands

Circuit diagram
safety PLC layout

Int. Revision : P242068A91
Drawing No.: +JOCC-DCB2
2011280786-001000-24
Scale: 1 mm : 1 mm / A3
Refer to protection notice ISO 16016
Sheet: 96

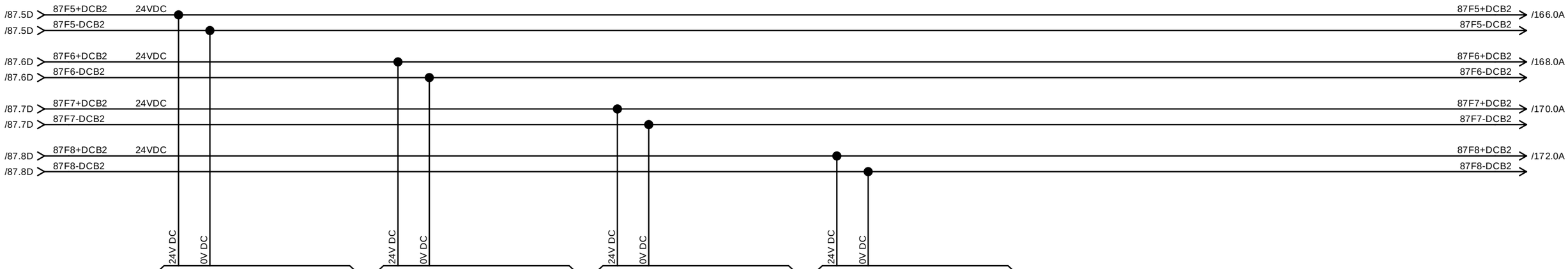

Chassis : 3 Slot : 4

-97U1

772142

/166.1D	IN 0	DI_1_FB_Y7.1
/166.2D	IN 1	DI_1_FB_Y7.2
/166.3D	IN 2	DI_1_FB_Y8.1
/166.4D	IN 3	DI_1_FB_Y8.2
/166.5D	IN 4	DI_1_FB_Y13
/166.6D	IN 5	DI_1_FB_Y14
/166.7D	IN 6	DI_1_ERC_PIN
/166.8D	IN 7	DI_SPARE
/167.1B	OUT 0	DO_SPARE
/167.2B	OUT 1	DO_SPARE
/167.3B	OUT 2	DO_SPARE
/167.4B	OUT 3	DO_SPARE

Chassis : 3 Slot : 5

-97U2

772142

/168.1D	IN 0	DI_2_APX_1ST_ALM
/168.2D	IN 1	DI_2_APX_2ND_ALM1
/168.3D	IN 2	DI_2_APX_2ND_ALM2
/168.4D	IN 3	DI_2_ERS_VALVE_CLS1
/168.5D	IN 4	DI_2_ERS_VALVE_CLS2
/168.6D	IN 5	DI_2_ERS_VALVE_CLS3
/168.7D	IN 6	DI_2_COM_FUSE
/168.8D	IN 7	DI_2_FB_SR_Y7.1-2
/169.1B	OUT 0	DO_2_SOL_Y7_ERC
/169.2B	OUT 1	DO_2_SOL_Y8_FRW
/169.3B	OUT 2	DO_2_SOL_Y13_BV
/169.4B	OUT 3	DO_2_SOL_Y14_BV

Chassis : 3 Slot : 6

-97U4

772142

/170.1D	IN 0	DI_2_ROT_LFT_1ST_ALM
/170.2D	IN 1	DI_2_ROT_RGT_1ST_ALM
/170.3D	IN 2	DI_2_ROT_2ND_ALM1
/170.4D	IN 3	DI_2_ROT_2ND_ALM2
/170.5D	IN 4	DI_SPARE
/170.6D	IN 5	DI_SPARE
/170.7D	IN 6	DI_2_ERC_ARM_VLV
/170.8D	IN 7	DI_SPARE
/171.1B	OUT 0	DO_SPARE
/171.2B	OUT 1	DO_SPARE
/171.3B	OUT 2	DO_SPARE
/171.4B	OUT 3	DO_SPARE

Chassis : 3 Slot : 7

-97U5

772142

/172.1D	IN 0	DI_2_FB_Y7.1
/172.2D	IN 1	DI_2_FB_Y7.2
/172.3D	IN 2	DI_2_FB_Y8.1
/172.4D	IN 3	DI_2_FB_Y8.2
/172.5D	IN 4	DI_2_FB_Y13
/172.6D	IN 5	DI_2_FB_Y14
/172.7D	IN 6	DI_2_ERC_PIN
/172.8D	IN 7	DI_SPARE
/173.1B	OUT 0	DO_SPARE
/173.2B	OUT 1	DO_SPARE
/173.3B	OUT 2	DO_SPARE
/173.4B	OUT 3	DO_SPARE

Index	Revision	Date	name
2	Final as built	19-3-2025	M.Besseling
1	For approval	13-11-2024	besselingmi

Drawn:	31-10-2024	elshofjo	
Engineer:	19-9-2024	besselingmi	
Approved:			
Changed:			

KANON LOADING EQUIPMENT B.V.

Ref: P242068, B242352 Quote:

Order: 2011280786 Item: 001000

KANON LOADING EQUIPMENT

www.kanon.nl

Electromach B.V.
Jan Tinbergenstraat 193
7559 SP Hengelo
The Netherlands
US

Circuit diagram
safety PLC layout

Int. Revision :	P242068A91
Drawing No.:	+JOCC-DCB2
2011280786-001000-24	Scale: 1 mm : 1 mm / A3
Refer to protection notice ISO 16016	Sheet: 97

-91U1 1769-OB32 Chassis : 1 Slot : 1	/91.1B OUT 0	/91.1B OUT 1	/91.1B OUT 2	/91.1B OUT 3	/91.1B OUT 4	/91.1B OUT 5	/91.1B OUT 6	/91.1B OUT 7
	DO_HPP_PUMP1_ON HPP Hydraulic pump 1	DO_HPP_PUMP2_ON HPP Hydraulic pump 2	DO_HPP_SOL_Y10_SLOW HPP slow solenoid -Y10	DO_HPP_SOL_Y15_UP HPP up solenoid -Y15	DO_CP_ALM_VISUAL Visual alarm	DO_CP_ALM_AUDIBLE Audible alarm	DO_CP_PFC_COM_ALM Pot. free contact common alarm	DO_CP_PFC_SPARE Pot. free contact spare

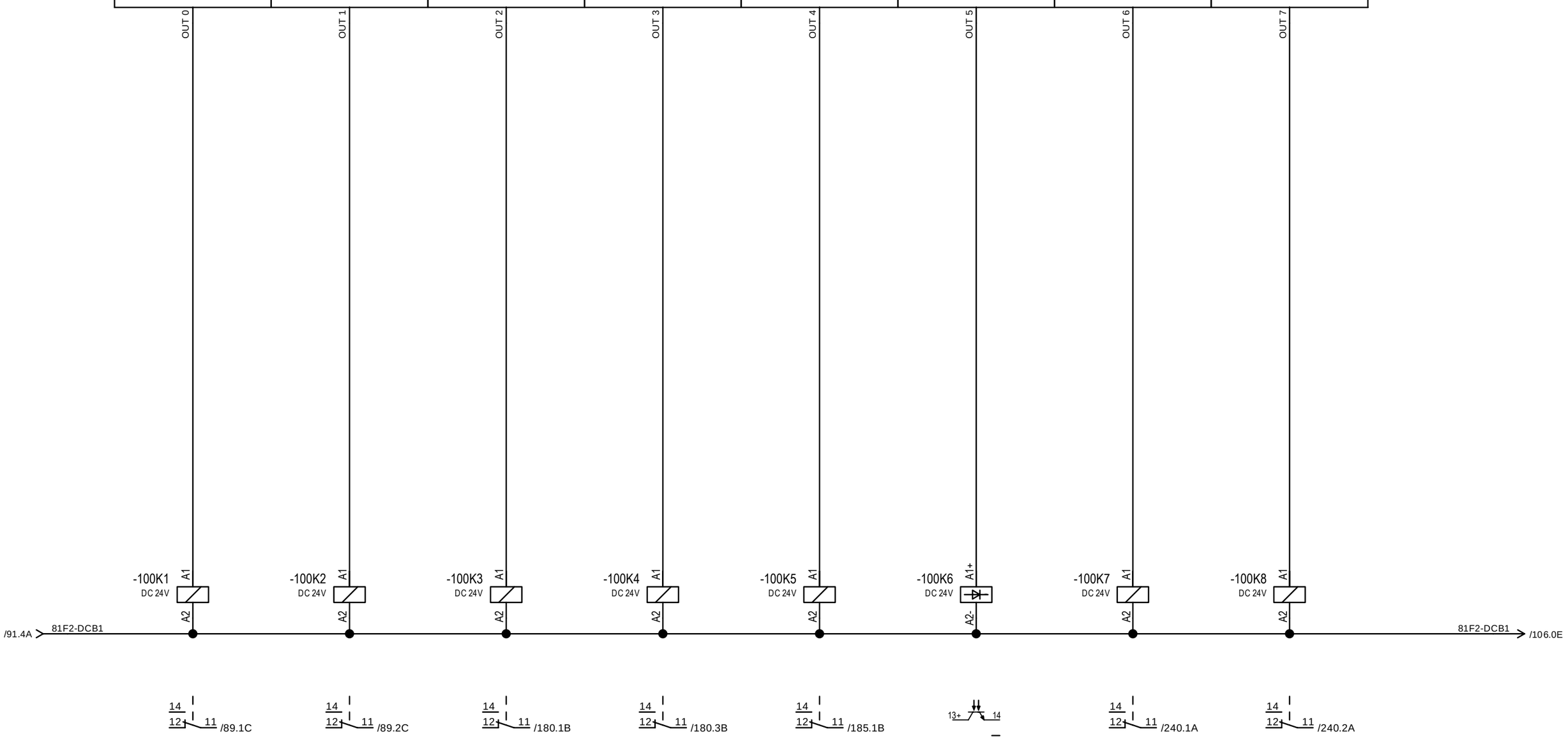

Index	Revision	Date	name					
2	Final as built	19-3-2025	M.Besseling	Drawn:	31-10-2024	elshofjo	KANON LOADING EQUIPMENT B.V.	
1	For approval	13-11-2024	besselingmi	Engineer:	19-9-2024	besselingmi		
				Approved:			Ref: P242068, B242352	Quote:
				Changed:			Order: 2011280786	Item: 001000

KANON LOADING EQUIPMENT
www.kanon.nl

Electromach B.V.
Jan Tinbergenstraat 193
7559 SP Hengelo
The Netherlands

Circuit diagram
PLC digital outputs

Int. Revision :	P242068A91
Drawing No.:	+JOCC-DCB1
2011280786-001000-24	Scale: 1 mm : 1 mm / A3
Refer to protection notice ISO 16016	Sheet: 100

	/91.1B	/91.1B	/91.1B	/91.1B	/91.1B	/91.1B	/91.1B	/91.1B
-91U1 1769-OB32 Chassis : 1 Slot : 1	OUT 8	OUT 9	OUT 10	OUT 11	OUT 12	OUT 13	OUT 14	OUT 15
	DO_CP_LMP_PWR_ON power on	DO_CP_LMP_LO_LVL_ALM Low oil level alarm	DO_CP_LMP_LO_PRESS_ALM Low oil press. alarm	DO_CP_LMP_COM_FUSE_ALM Common fuse alarm	DO_CP_LMP_MNVR_ERC_AMD Arm in MNVR. ERC armed	DO_CP_LMP_SOL_FB_FAIL Solenoid feedback failure	DO_SPARE Spare	DO_CP_LMP_AUTO_ACT Autotest activated

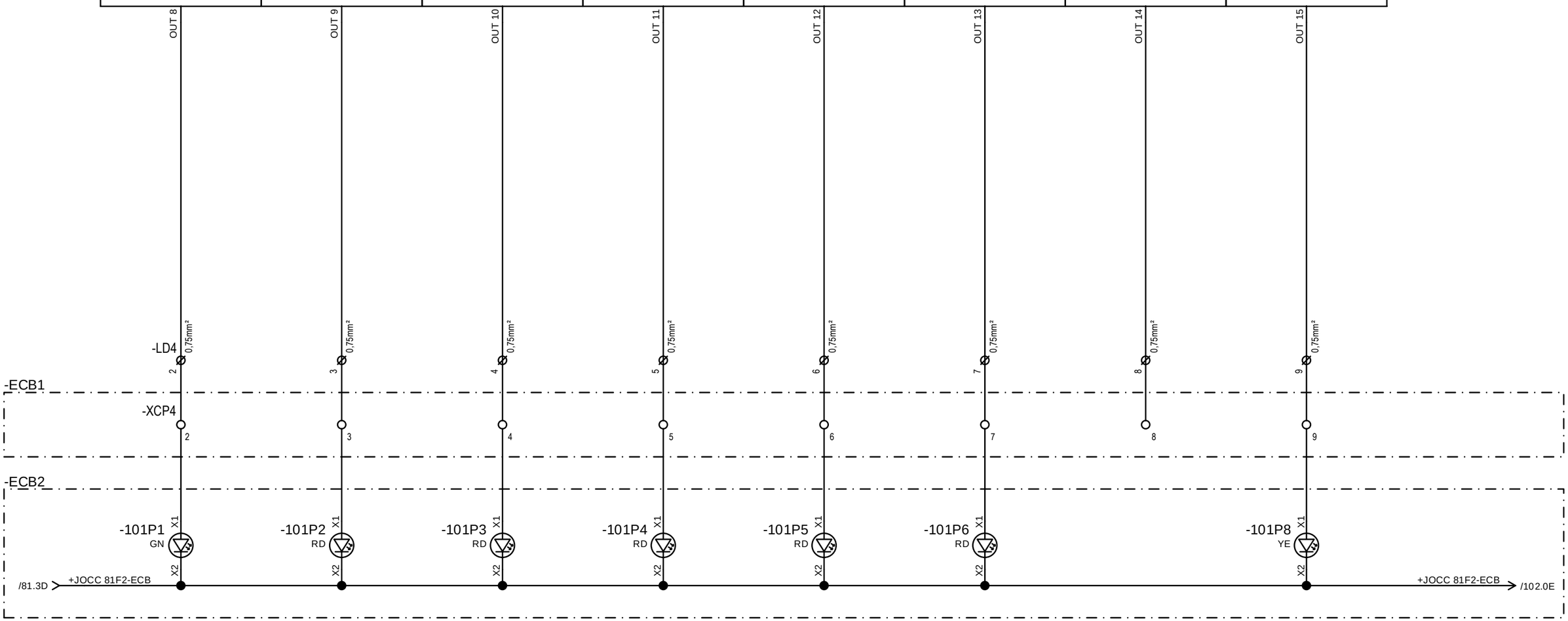

Index	Revision	Date	name				KANON LOADING EQUIPMENT B.V.			Electromach B.V. Jan Tinbergenstraat 193 7559 SP Hengelo The Netherlands	Circuit diagram PLC digital outputs	Int. Revision :	P242068A91
3	Final as built	19-3-2025	M.Besseling	Drawn:	31-10-2024	elshofjo						Drawing No.:	+JOCC-DCB1
2	Final for production	22-11-2024	besselingmi	Engineer:	19-9-2024	besselingmi						2011280786-001000-24	Scale: 1 mm : 1 mm / A3
1	For approval	13-11-2024	besselingmi	Approved:			Ref: P242068, B242352	Quote:				Refer to protection notice ISO 16016	Sheet: 101
				Changed:			Order: 2011280786	Item:	001000				

KANON LOADING EQUIPMENT
www.kanon.nl

/91.1B	/91.1B	/91.1B	/91.1B	/91.1B	/91.1B	/91.1B	/91.1B
OUT 16	OUT 17	OUT 18	OUT 19	OUT 20	OUT 21	OUT 22	OUT 23
DO_CP_LMP_ERC_T_FL ERC test failure	DO_SPARE Spare	DO_SPARE Spare	DO_SPARE Spare	DO_SPARE Spare	DO_SPARE Spare	DO_SPARE Spare	DO_SPARE Spare

-91U1
1769-OB32
Chassis : 1
Slot : 1

OUT 16 OUT 17 OUT 18 OUT 19 OUT 20 OUT 21 OUT 22 OUT 23

0,75mm² 0,75mm² 0,75mm² 0,75mm² 0,75mm² 0,75mm² 0,75mm² 0,75mm²

-LD4

10 11 12 13 14 15 16 17

-ECB1

-XCP4

10 11 12 13 14 15 16 17

-ECB1

-102P1 X1
RD
X2

/101.9E +JOCC 81F2-ECB

+JOCC 81F2-ECB /104.0E

Index	Revision	Date	name					
3	Final as built	19-3-2025	M.Besseling	Drawn:	31-10-2024	elshofjo		
2	Final for production	22-11-2024	besselingmi	Engineer:	19-9-2024	besselingmi		
1	For approval	13-11-2024	besselingmi	Approved:				
				Changed:				

KANON LOADING EQUIPMENT B.V.

Ref: P242068, B242352 Quote:
Order: 2011280786 Item: 001000

KANON LOADING EQUIPMENT
www.kanon.nl

Electromach B.V.
Jan Tinbergenstraat 193
7559 SP Hengelo
The Netherlands
US

Circuit diagram
PLC digital outputs

Int. Revision :	P242068A91
Drawing No.:	+JOCC-DCB1
2011280786-001000-24	Scale: 1 mm : 1 mm / A3
Refer to protection notice ISO 16016	Sheet: 102

	/91.1B	/91.1B	/91.1B	/91.1B	/91.1B	/91.1B	/91.1B	/91.1B
-91U1 1769-OB32 Chassis : 1 Slot : 1	OUT 24	OUT 25	OUT 26	OUT 27	OUT 28	OUT 29	OUT 30	OUT 31
	DO_SPARE Spare	DO_SPARE Spare	DO_SPARE Spare	DO_SPARE Spare	DO_SPARE Spare	DO_SPARE Spare	DO_SPARE Spare	DO_SPARE Spare
	OUT 24	OUT 25	OUT 26	OUT 27	OUT 28	OUT 29	OUT 30	OUT 31

Index	Revision	Date	name			
2	Final as built	19-3-2025	M.Besseling	Drawn:	31-10-2024	elshofjo
1	For approval	13-11-2024	besselingmi	Engineer:	19-9-2024	besselingmi
				Approved:		
				Changed:		

KANON LOADING EQUIPMENT B.V.

Ref: P242068, B242352 Quote:

Order: 2011280786 Item: 001000

KANON LOADING EQUIPMENT

www.kanon.nl

Electromach B.V.
Jan Tinbergenstraat 193
7559 SP Hengelo
The Netherlands
US

Circuit diagram
PLC digital outputs

Int. Revision :	P242068A91
Drawing No.:	+JOCC-DCB1
2011280786-001000-24	Scale: 1 mm : 1 mm / A3
Refer to protection notice ISO 16016	Sheet: 103

	/91.2B	/91.2B	/91.2B	/91.2B	/91.2B	/91.2B	/91.2B	/91.2B
-91U2 1769-OB32 Chassis : 1 Slot : 2	OUT 0	OUT 1	OUT 2	OUT 3	OUT 4	OUT 5	OUT 6	OUT 7
	DO_1_LMP_ARM_IN_ALM MLA-A Arm In alarm	DO_1_LMP_MAN_ERC_ALM MLA-A Manual ERC alarm	DO_1_LMP_FRW MLA-A freewheel	DO_1_LMP_MNVR MLA-A manoeuvring	DO_1_LMP_ERC_ARMED MLA-A ERC armed	DO_1_LMP_ERC_DISARMED MLA-A ERC disarmed	DO_1_LMP_VESSEL_CONNECTED MLA-A connected to vessel	DO_1_LMP_VESSEL_DISCONNECTED MLA-A disconnnected from vessel

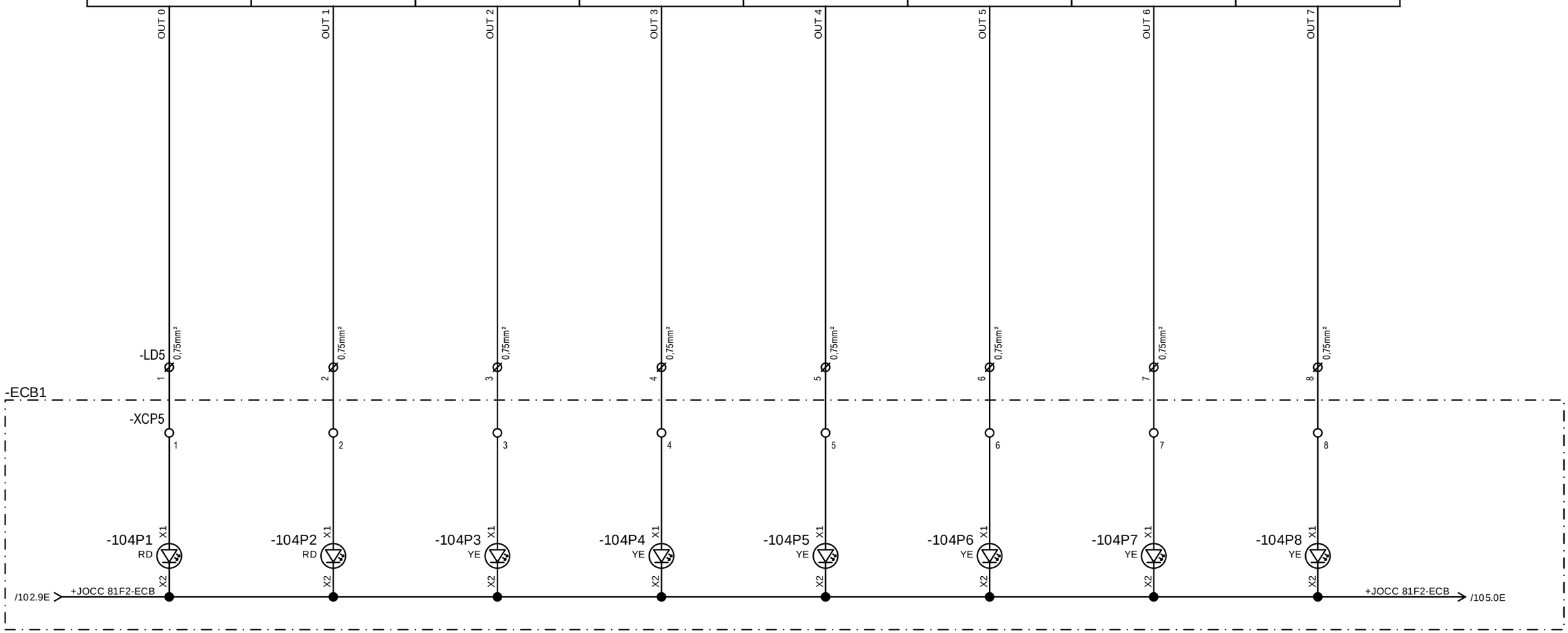

Index	Revision	Date	name				
3	Final as built	19-3-2025	M.Besseling	Drawn:	31-10-2024	elshofjo	
2	Final for production	22-11-2024	besselingmi	Engineer:	19-9-2024	besselingmi	
1	For approval	13-11-2024	besselingmi	Approved:			
				Changed:			

KANON LOADING EQUIPMENT B.V.

Ref: P242068, B242352 Quote:

Order: 2011280786 Item: 001000

KANON LOADING EQUIPMENT
www.kanon.nl

Electromach B.V.
Jan Tinbergenstraat 193
7559 SP Hengelo
The Netherlands
US

Circuit diagram
PLC digital outputs

Int. Revision :	P242068A91
Drawing No.:	+JOCC-DCB1
2011280786-001000-24	Scale: 1 mm : 1 mm / A3
Refer to protection notice ISO 16016	Sheet: 104

	/91.2B	/91.2B	/91.2B	/91.2B	/91.2B	/91.2B	/91.2B	/91.2B
-91U2 1769-OB32 Chassis : 1 Slot : 2	OUT 8	OUT 9	OUT 10	OUT 11	OUT 12	OUT 13	OUT 14	OUT 15
	DO_1_LMP_LOCKED MLA-A Arm locked	DO_1_LMP_ERS_VLV_OPND MLA-A upper ERS valve opened	DO_1_LMP_ERS_VLV_CLSD MLA-A upper ERS valve closed	DO_1_LMP_ERC_AVBL MLA-A ERC available	DO_1_LMP_ERC_TEST_ND MLA-A ERC solenoid test needed	DO_SPARE Spare	DO_SPARE Spare	DO_SPARE Spare

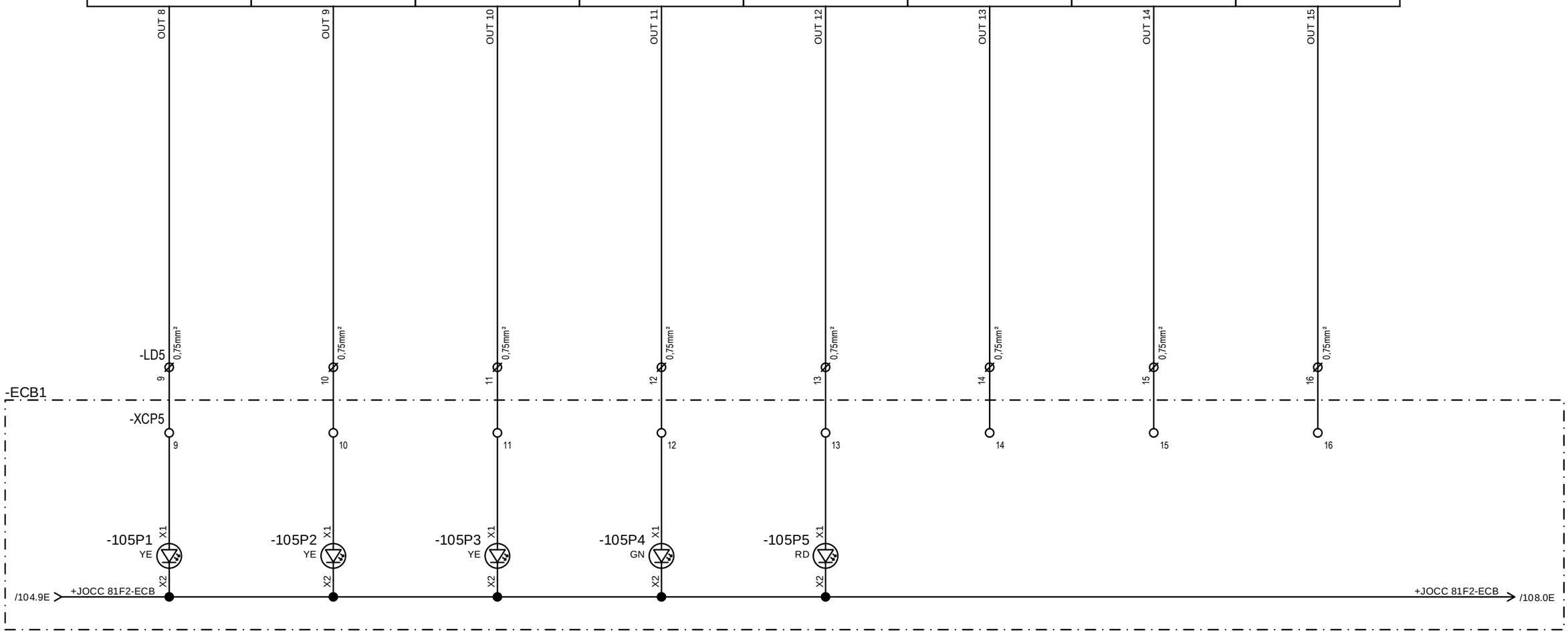

Index	Revision	Date	name								
3	Final as built	19-3-2025	M.Besseling	Drawn:	31-10-2024	elshofjo	**KANON LOADING EQUIPMENT B.V.**				
2	Final for production	22-11-2024	besselingmi	Engineer:	19-9-2024	besselingmi					
1	For approval	13-11-2024	besselingmi	Approved:			Ref: P242068, B242352	Quote:			
				Changed:			Order: 2011280786	Item: 001000			

KANON LOADING EQUIPMENT
www.kanon.nl

Electromach B.V.
Jan Tinbergenstraat 193
7559 SP Hengelo
The Netherlands
US

Circuit diagram
PLC digital outputs

Int. Revision :	P242068A91
Drawing No.:	+JOCC-DCB1
2011280786-001000-24	Scale: 1 mm : 1 mm / A3
Refer to protection notice ISO 16016	Sheet: 105

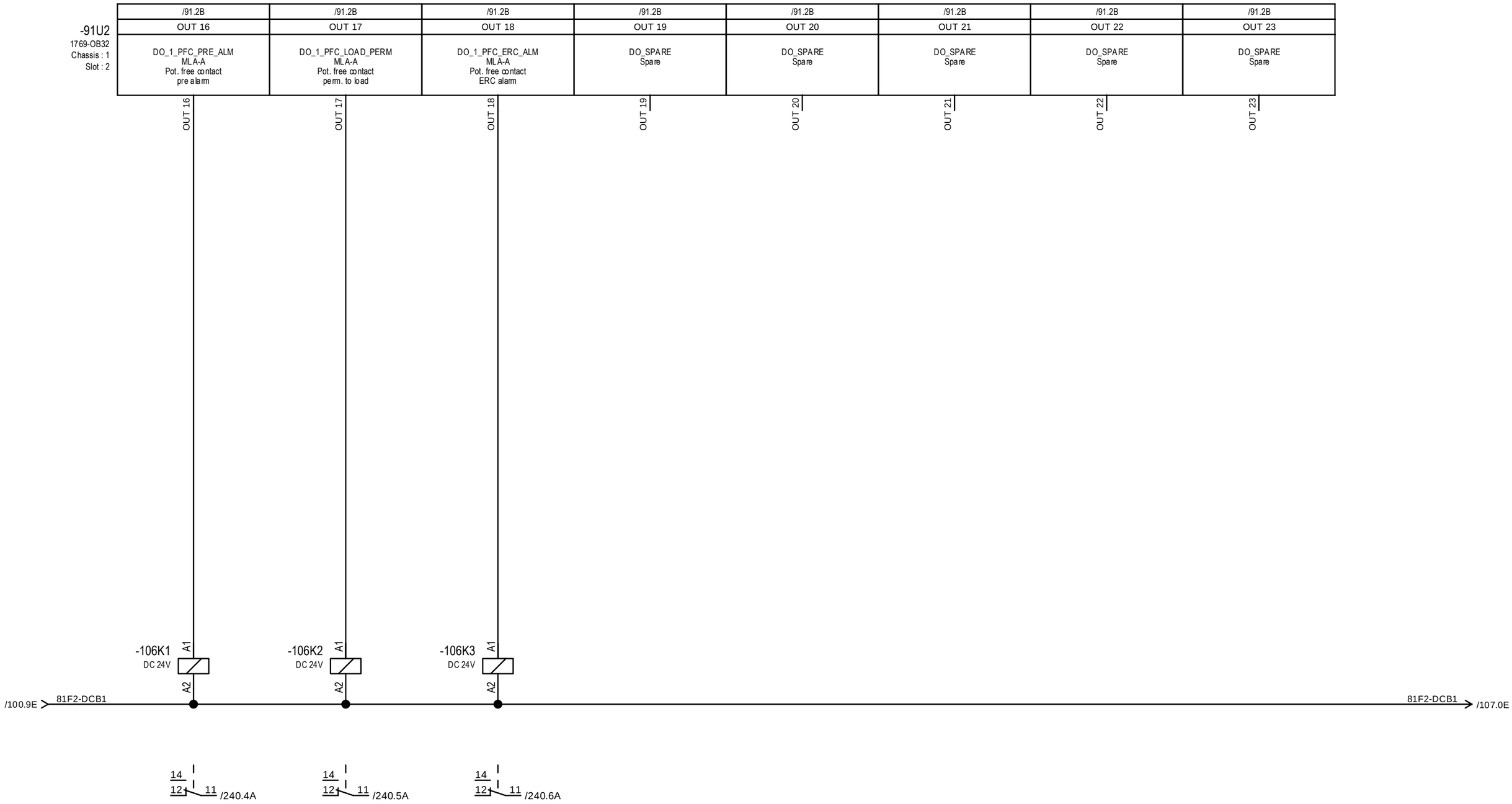

Index	Revision	Date	name				
2	Final as built	19-3-2025	M.Besseling	Drawn:	31-10-2024	elshofjo	KANON LOADING EQUIPMENT B.V.
1	For approval	13-11-2024	besselingmi	Engineer:	19-9-2024	besselingmi	
				Approved:			Ref: P242068, B242352 Quote:
				Changed:			Order: 2011280786 Item: 001000

KANON LOADING EQUIPMENT
www.kanon.nl

Electromach B.V.
Jan Tinbergenstraat 193
7559 SP Hengelo
The Netherlands

Circuit diagram
PLC digital outputs

Int. Revision :	P242068A91
Drawing No.:	+JOCC-DCB1
2011280786-001000-24	Scale: 1 mm : 1 mm / A3
Refer to protection notice ISO 16016	Sheet: 106

/91.2B	/91.2B	/91.2B	/91.2B	/91.2B	/91.2B	/91.2B	/91.2B
OUT 24	OUT 25	OUT 26	OUT 27	OUT 28	OUT 29	OUT 30	OUT 31
DO_1_ERS_RV1_OPN MLA-A ERC relief valve 1 open	DO_1_ERS_RV2_OPN MLA-A ERC relief valve 2 open	DO_1_SOL_Y9_MNVR MLA-A manoeuvring Y9.1 Y9.2 Y9.3	DO_SPARE Spare	DO_SPARE Spare	DO_SPARE Spare	DO_SPARE Spare	DO_SPARE Spare

-91U2
1769-OB32
Chassis : 1
Slot : 2

OUT 24 OUT 25 OUT 26 OUT 27 OUT 28 OUT 29 OUT 30 OUT 31

-107K1 DC 24V A1 A2
-107K2 DC 24V A1 A2
-107K3 DC 24V A1 A2

/106.9E 81F2-DCB1 — 81F2-DCB1 /110.0E

14 12 11 /191.1B
14 12 11 /191.3B
14 12 11 /190.4B

Index	Revision	Date	name
2	Final as built	19-3-2025	M.Besseling
1	For approval	13-11-2024	besselingmi

Drawn:	31-10-2024	elshofjo	
Engineer:	19-9-2024	besselingmi	
Approved:			
Changed:			

KANON LOADING EQUIPMENT B.V.

Ref: P242068, B242352 Quote:
Order: 2011280786 Item: 001000

KANON LOADING EQUIPMENT
www.kanon.nl

Electromach B.V.
Jan Tinbergenstraat 193
7559 SP Hengelo
The Netherlands
US

Circuit diagram
PLC digital outputs

Int. Revision :	P242068A91
Drawing No.:	+JOCC-DCB1
2011280786-001000-24	Scale: 1 mm : 1 mm / A3
Refer to protection notice ISO 16016	Sheet: 107

	/91.3B	/91.3B	/91.3B	/91.3B	/91.3B	/91.3B	/91.3B	/91.3B
-91U3 1769-OB32 Chassis : 1 Slot : 3	OUT 0	OUT 1	OUT 2	OUT 3	OUT 4	OUT 5	OUT 6	OUT 7
	DO_2_LMP_ARM_IN_ALM MLA-B Arm In alarm	DO_2_LMP_MAN_ERC_ALM MLA-B Manual ERC alarm	DO_2_LMP_FRW MLA-B freewheel	DO_2_LMP_MNVR MLA-B manoeuvring	DO_2_LMP_ERC_ARMED MLA-B ERC armed	DO_2_LMP_ERC_DISARMED MLA-B ERC disarmed	DO_2_LMP_VESSEL_CONNECTED MLA-B connected to vessel	DO_1_LMP_VESSEL_DISCONNECTED MLA-B disconnnected from vessel

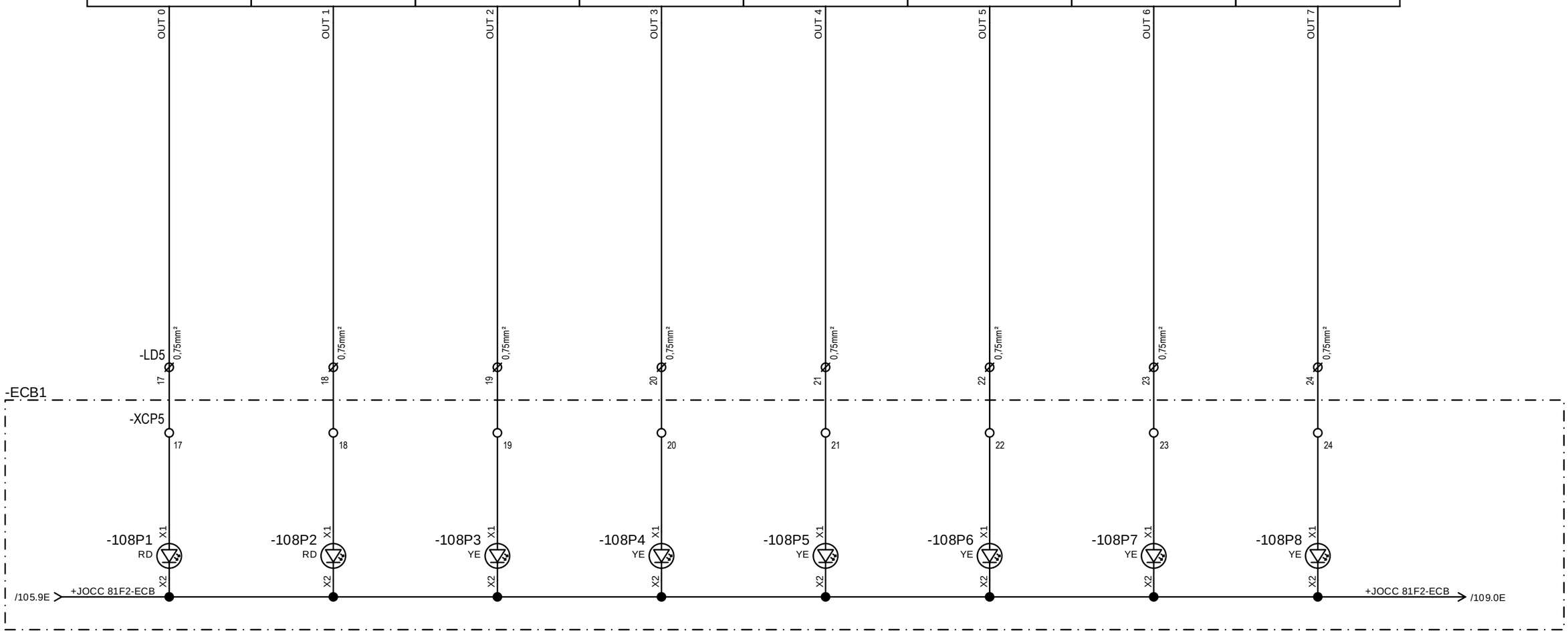

Index	Revision	Date	name			
3	Final as built	19-3-2025	M.Besseling	Drawn:	31-10-2024	elshofjo
2	Final for production	22-11-2024	besselingmi	Engineer:	19-9-2024	besselingmi
1	For approval	13-11-2024	besselingmi	Approved:		
				Changed:		

KANON LOADING EQUIPMENT B.V.

Ref: P242068, B242352 Quote:

Order: 2011280786 Item: 001000

KANON LOADING EQUIPMENT

www.kanon.nl

Electromach B.V.
Jan Tinbergenstraat 193
7559 SP Hengelo
The Netherlands
US

Circuit diagram
PLC digital outputs

Int. Revision :	P242068A91
Drawing No.:	+JOCC-DCB1
2011280786-001000-24	Scale: 1 mm : 1 mm / A3
Refer to protection notice ISO 16016	Sheet: 108

	/91.3B	/91.3B	/91.3B	/91.3B	/91.3B	/91.3B	/91.3B	/91.3B
-91U3 1769-OB32 Chassis : 1 Slot : 3	OUT 8	OUT 9	OUT 10	OUT 11	OUT 12	OUT 13	OUT 14	OUT 15
	DO_2_LMP_LOCKED MLA-B Arm locked	DO_2_LMP_ERS_VLV_OPND MLA-B upper ERS valve opened	DO_2_LMP_ERS_VLV_CLSD MLA-B upper ERS valve closed	DO_2_LMP_ERC_AVBL MLA-B ERC available	DO_2_LMP_ERC_TEST_ND MLA-B ERC solenoid test needed	DO_SPARE Spare	DO_SPARE Spare	DO_SPARE Spare

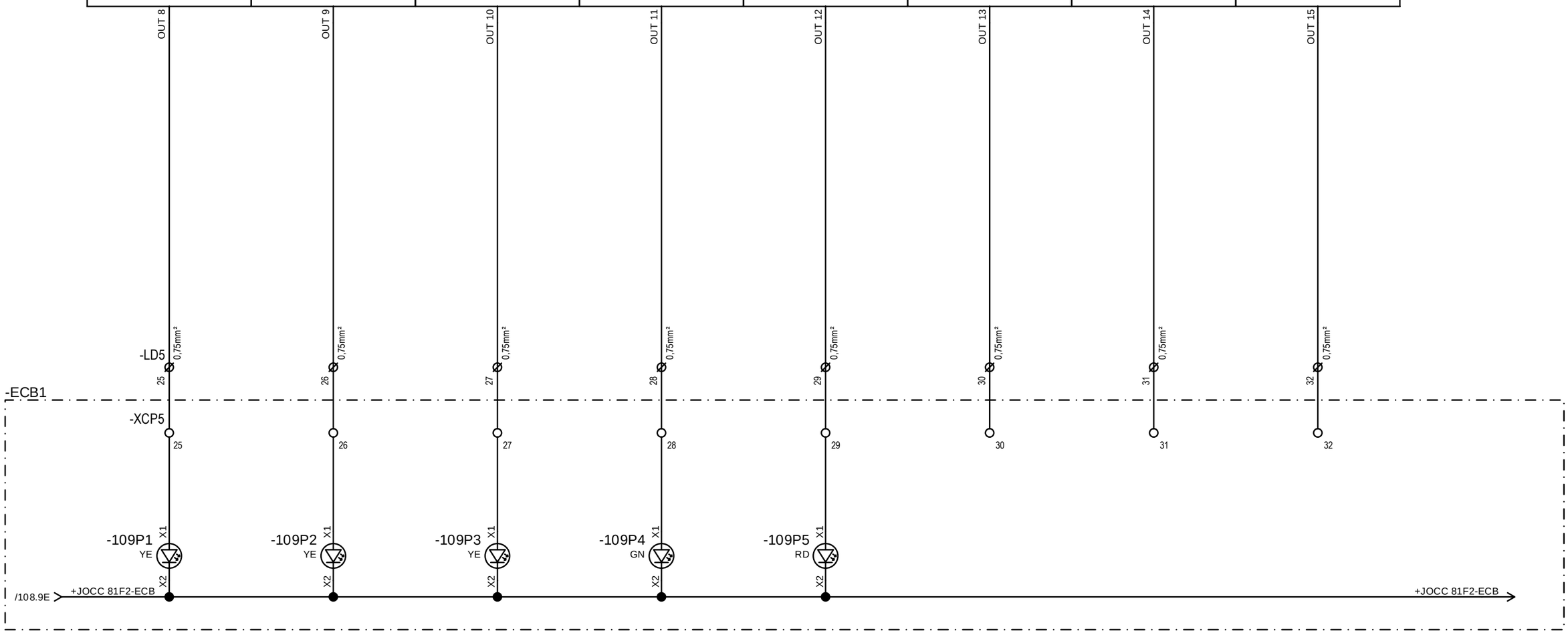

Index	Revision	Date	name			
3	Final as built	19-3-2025	M.Besseling	Drawn:	31-10-2024	elshofjo
2	Final for production	22-11-2024	besselingmi	Engineer:	19-9-2024	besselingmi
1	For approval	13-11-2024	besselingmi	Approved:		
				Changed:		

KANON LOADING EQUIPMENT B.V.

Ref: P242068, B242352 Quote:

Order: 2011280786 Item: 001000

KANON LOADING EQUIPMENT
www.kanon.nl

Electromach B.V.
Jan Tinbergenstraat 193
7559 SP Hengelo
The Netherlands
US

Circuit diagram
PLC digital outputs

Int. Revision :	P242068A91
Drawing No.:	+JOCC-DCB1
2011280786-001000-24	Scale: 1 mm : 1 mm / A3
Refer to protection notice ISO 16016	Sheet: 109

/91.3B	/91.3B	/91.3B	/91.3B	/91.3B	/91.3B	/91.3B	/91.3B
OUT 16	OUT 17	OUT 18	OUT 19	OUT 20	OUT 21	OUT 22	OUT 23
DO_2_PFC_PRE_ALM MLA-B Pot. free contact pre alarm	DO_2_PFC_LOAD_PERM MLA-B Pot. free contact perm. to load	DO_2_PFC_ERC_ALM MLA-B Pot. free contact ERC alarm	DO_SPARE Spare	DO_SPARE Spare	DO_SPARE Spare	DO_SPARE Spare	DO_SPARE Spare

-91U3
1769-OB32
Chassis : 1
Slot : 3

OUT 16 OUT 17 OUT 18 OUT 19 OUT 20 OUT 21 OUT 22 OUT 23

-110K1 DC 24V A1 A2
-110K2 DC 24V A1 A2
-110K3 DC 24V A1 A2

/107.9E 81F2-DCB1 — 81F2-DCB1 /111.0E

14 12 11 /240.7A
14 12 11 /240.8A
14 12 11 /240.9A

Index	Revision	Date	name
2	Final as built	19-3-2025	M.Besseling
1	For approval	13-11-2024	besselingmi

Drawn:	31-10-2024	elshofjo	
Engineer:	19-9-2024	besselingmi	
Approved:			
Changed:			

KANON LOADING EQUIPMENT B.V.

Ref: P242068, B242352 Quote:
Order: 2011280786 Item: 001000

KANON LOADING EQUIPMENT
www.kanon.nl

Electromach B.V.
Jan Tinbergenstraat 193
7559 SP Hengelo
The Netherlands
US

Circuit diagram
PLC digital outputs

Int. Revision :	P242068A91
Drawing No.:	+JOCC-DCB1
2011280786-001000-24	
Scale:	1 mm : 1 mm / A3
Refer to protection notice ISO 16016	Sheet: 110

/91.3B	/91.3B	/91.3B	/91.3B	/91.3B	/91.3B	/91.3B	/91.3B
OUT 24	OUT 25	OUT 26	OUT 27	OUT 28	OUT 29	OUT 30	OUT 31
DO_2_ERS_RV1_OPN MLA-B ERC relief valve 1 open	DO_2_ERS_RV2_OPN MLA-B ERC relief valve 2 open	DO_2_SOL_Y9_MNVR MLA-B manoeuvring Y9.1 Y9.2 Y9.3	DO_SPARE Spare	DO_SPARE Spare	DO_SPARE Spare	DO_SPARE Spare	DO_SPARE Spare

-91U3
1769-OB32
Chassis : 1
Slot : 3

OUT 24 OUT 25 OUT 26 OUT 27 OUT 28 OUT 29 OUT 30 OUT 31

-111K1 DC 24V A1 A2
-111K2 DC 24V A1 A2
-111K3 DC 24V A1 A2

/110.9E 81F2-DCB1 — 81F2-DCB1

14 12 11 /196.1B
14 12 11 /196.3B
14 12 11 /195.4B

2	*Final as built*	*19-3-2025*	*M.Besseling*	Drawn:	*31-10-2024*	*elshofjo*	***KANON LOADING EQUIPMENT B.V.***		***Electromach B.V.*** *Jan Tinbergenstraat 193* *7559 SP Hengelo* *The Netherlands*	*Circuit diagram* *PLC digital outputs*	Int. Revision : *P242068A91*
1	*For approval*	*13-11-2024*	*besselingmi*	Engineer:	*19-9-2024*	*besselingmi*					Drawing No.: *+JOCC-DCB1*
				Approved:			Ref: *P242068, B242352*	Quote:			*2011280786-001000-24* Scale: *1 mm : 1 mm / A3*
Index	Revision	Date	name	Changed:			Order: *2011280786*	Item: *001000*			Refer to protection notice ISO 16016 Sheet: *111*

KANON LOADING EQUIPMENT
www.kanon.nl

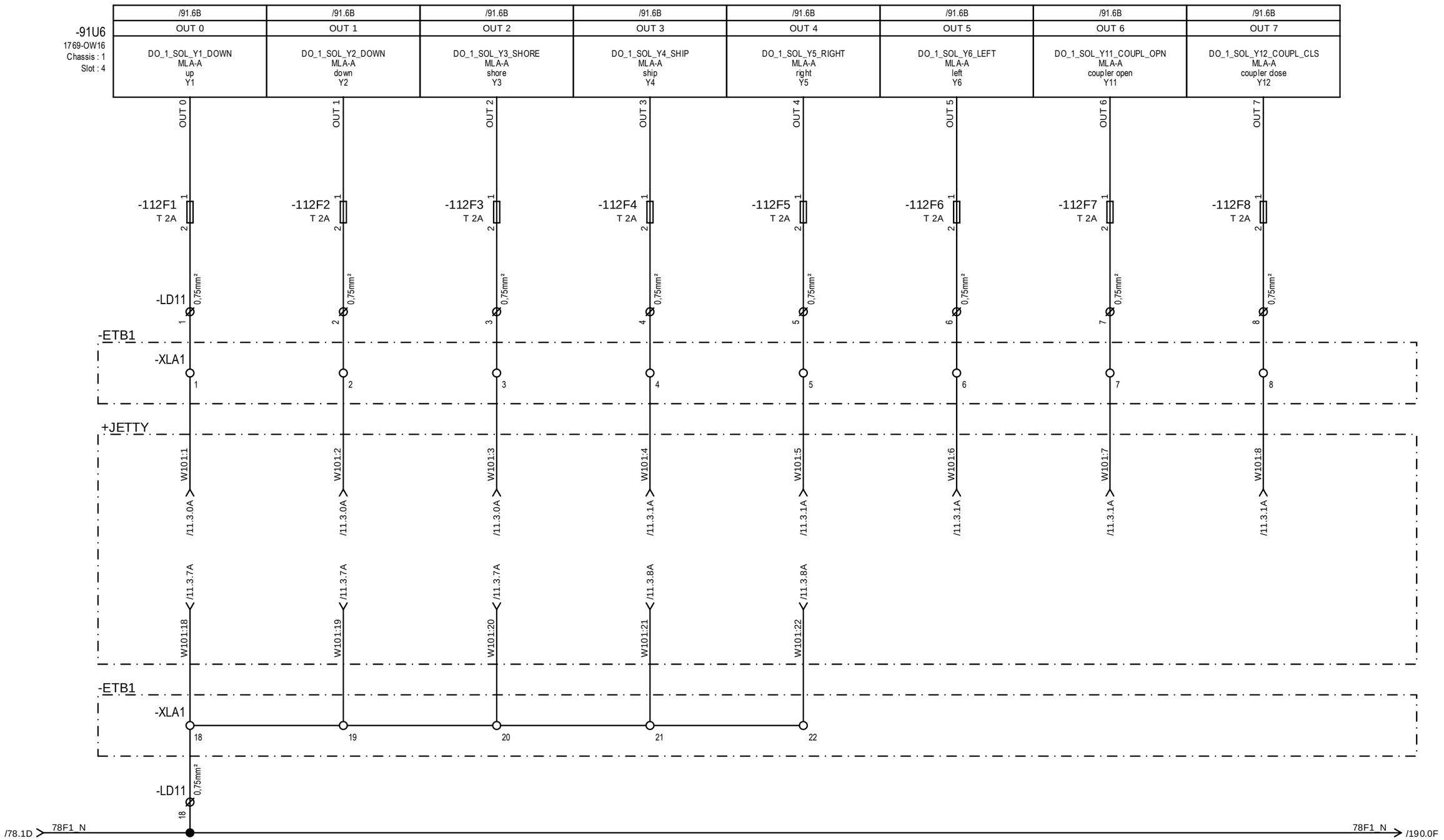

Index	Revision	Date	name
2	Final as built	19-3-2025	M.Besseling
1	For approval	13-11-2024	besselingmi

Drawn:	31-10-2024	elshofjo	
Engineer:	19-9-2024	besselingmi	
Approved:			
Changed:			

KANON LOADING EQUIPMENT B.V.

Ref: P242068, B242352 Quote:
Order: 2011280786 Item: 001000

KANON LOADING EQUIPMENT
www.kanon.nl

Electromach B.V.
Jan Tinbergenstraat 193
7559 SP Hengelo
The Netherlands

Circuit diagram
PLC relay outputs

Int. Revision :	P242068A91
Drawing No.:	+JOCC-DCB1
2011280786-001000-24	Scale: 1 mm : 1 mm / A3
Refer to protection notice ISO 16016	Sheet: 112

	/91.6B	/91.6B	/91.6B	/91.6B	/91.6B	/91.6B	/91.6B	/91.6B
-91U6 1769-OW16 Chassis : 1 Slot : 4	OUT 8	OUT 9	OUT 10	OUT 11	OUT 12	OUT 13	OUT 14	OUT 15
	DO_SPARE Spare	DO_SPARE Spare	DO_SPARE Spare	DO_SPARE Spare	DO_SPARE Spare	DO_SPARE Spare	DO_SPARE Spare	DO_SPARE Spare
	OUT 8	OUT 9	OUT 10	OUT 11	OUT 12	OUT 13	OUT 14	OUT 15

Index	Revision	Date	name			
2	Final as built	19-3-2025	M.Besseling	Drawn:	31-10-2024	elshofjo
1	For approval	13-11-2024	besselingmi	Engineer:	19-9-2024	besselingmi
				Approved:		
				Changed:		

KANON LOADING EQUIPMENT B.V.

Ref: P242068, B242352 Quote:

Order: 2011280786 Item: 001000

KANON LOADING EQUIPMENT

www.kanon.nl

Electromach B.V.
Jan Tinbergenstraat 193
7559 SP Hengelo
The Netherlands
US

Circuit diagram
PLC relay outputs

Int. Revision :	P242068A91
Drawing No.:	+JOCC-DCB1
2011280786-001000-24	Scale: 1 mm : 1 mm / A3
Refer to protection notice ISO 16016	Sheet: 113

	/91.8B	/91.8B	/91.8B	/91.8B	/91.8B	/91.8B	/91.8B	/91.8B
-91U8 1769-OW16 Chassis : 1 Slot : 5	OUT 0	OUT 1	OUT 2	OUT 3	OUT 4	OUT 5	OUT 6	OUT 7
	DO_2_SOL_Y1_DOWN MLA-B up Y1	DO_2_SOL_Y2_DOWN MLA-B down Y2	DO_2_SOL_Y3_SHORE MLA-B shore Y3	DO_2_SOL_Y4_SHIP MLA-B ship Y4	DO_2_SOL_Y5_RIGHT MLA-B right Y5	DO_2_SOL_Y6_LEFT MLA-B left Y6	DO_2_SOL_Y11_COUPL_OPN MLA-B coupler open Y11	DO_2_SOL_Y12_COUPL_CLS MLA-B coupler dose Y12

OUT 0 … OUT 7

-114F1 … -114F8 T 2A (1, 2)

0,75mm²

-LD12 (1, 2, 3, 4, 5, 6, 7, 8)

-ETB1 / -XLA2 (1, 2, 3, 4, 5, 6, 7, 8)

+JETTY

W201:1 … W201:8 /12.3.0A, /12.3.1A

W201:18 … W201:22 /12.3.7A, /12.3.8A

-ETB1 / -XLA2 (18, 19, 20, 21, 22)

-LD12 (18)

/78.2D 78F2_N — 78F2_N /195.0F

Index	Revision	Date	name
2	Final as built	19-3-2025	M.Besseling
1	For approval	13-11-2024	besselingmi

Drawn:	31-10-2024	elshofjo	
Engineer:	19-9-2024	besselingmi	
Approved:			
Changed:			

KANON LOADING EQUIPMENT B.V.

Ref: P242068, B242352 Quote:

Order: 2011280786 Item: 001000

KANON LOADING EQUIPMENT

www.kanon.nl

Electromach B.V.
Jan Tinbergenstraat 193
7559 SP Hengelo
The Netherlands

Circuit diagram
PLC relay outputs

Int. Revision :	P242068A91
Drawing No.:	+JOCC-DCB1
2011280786-001000-24	Scale: 1 mm : 1 mm / A3
Refer to protection notice ISO 16016	Sheet: 114

	/91.8B	/91.8B	/91.8B	/91.8B	/91.8B	/91.8B	/91.8B	/91.8B
-91U8 1769-OW16 Chassis : 1 Slot : 5	OUT 8	OUT 9	OUT 10	OUT 11	OUT 12	OUT 13	OUT 14	OUT 15
	DO_SPARE Spare	DO_SPARE Spare	DO_SPARE Spare	DO_SPARE Spare	DO_SPARE Spare	DO_SPARE Spare	DO_SPARE Spare	DO_SPARE Spare
	OUT 8	OUT 9	OUT 10	OUT 11	OUT 12	OUT 13	OUT 14	OUT 15

Index	Revision	Date	name
2	Final as built	19-3-2025	M.Besseling
1	For approval	13-11-2024	besselingmi

Drawn:	31-10-2024	elshofjo	
Engineer:	19-9-2024	besselingmi	
Approved:			
Changed:			

KANON LOADING EQUIPMENT B.V.

Ref: P242068, B242352 Quote:

Order: 2011280786 Item: 001000

KANON LOADING EQUIPMENT
www.kanon.nl

Electromach B.V.
Jan Tinbergenstraat 193
7559 SP Hengelo
The Netherlands

Circuit diagram
PLC relay outputs

Int. Revision :	P242068A91
Drawing No.:	+JOCC-DCB1
2011280786-001000-24	
Scale:	1 mm : 1 mm / A3
Refer to protection notice ISO 16016	Sheet: 115

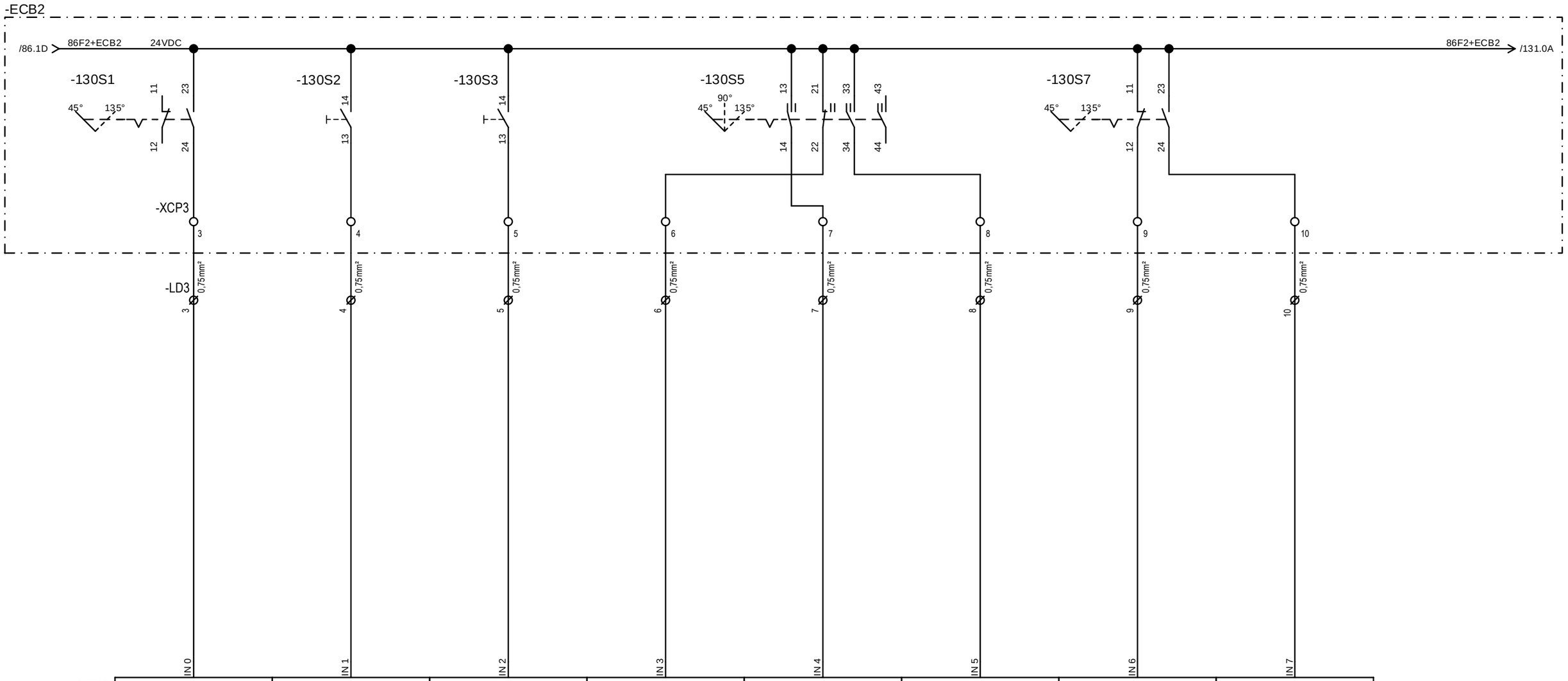

-94U1
1769-IQ32
Chassis: 2
Slot 1

DI_CP_PWR_ON Power off / on power on selected	DI_CP_PB_LAMPTEST Lamp test	DI_CP_PB_ACK Alarm acknowledge	DI_CP_SEL_CTRL_LOCAL Control LOC / PEN / RAD local selected	DI_CP_SEL_CTRL_PENDANT Control LOC / PEN / RAD pendant selected	DI_CP_SEL_CTRL_RADIO Control LOC / PEN / RAD radio selected	DI_CP_SEL_PUMP_1 Pump selection 1 / 2 pump 1 selected	DI_CP_SEL_PUMP_2 Pump selection 1 / 2 pump 2 selected
IN 0	IN 1	IN 2	IN 3	IN 4	IN 5	IN 6	IN 7
/94.1B	/94.1B	/94.1B	/94.1B	/94.1B	/94.1B	/94.1B	/94.1B

Index	Revision	Date	name
2	Final as built	19-3-2025	M.Besseling
1	For approval	13-11-2024	besselingmi

Drawn:	31-10-2024	elshofjo	
Engineer:	19-9-2024	besselingmi	
Approved:			
Changed:			

KANON LOADING EQUIPMENT B.V.

Ref: P242068, B242352 Quote:
Order: 2011280786 Item: 001000

KANON LOADING EQUIPMENT
www.kanon.nl

Electromach B.V.
Jan Tinbergenstraat 193
7559 SP Hengelo
The Netherlands
US

Circuit diagram
PLC digital inputs

Int. Revision :	P242068A91
Drawing No.:	+JOCC-DCB2
2011280786-001000-24	
Scale:	1 mm : 1 mm / A3
Refer to protection notice ISO 16016	Sheet: 130

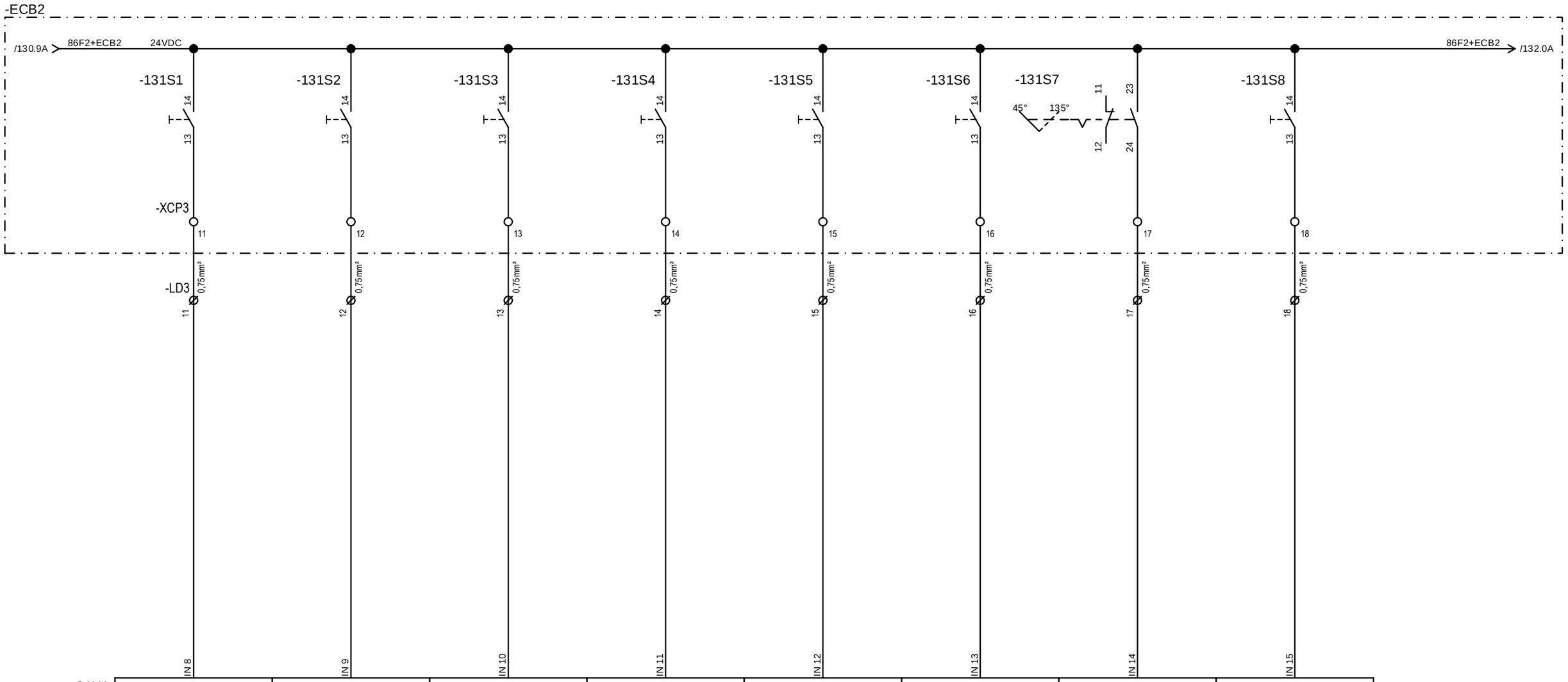

-94U1
1769-IQ32
Chassis: 2
Slot 1

DI_CP_PB_UP Up	DI_CP_PB_DOWN Down	DI_CP_PB_SHORE Shore	DI_CP_PB_SHIP Ship	DI_CP_PB_RIGHT Right	DI_CP_PB_LEFT Left	DI_CP_SEL_FAST Slow / fast fast selected	DI_CP_PB_FREEW Freewheel
IN 8	IN 9	IN 10	IN 11	IN 12	IN 13	IN 14	IN 15
/94.1B	/94.1B	/94.1B	/94.1B	/94.1B	/94.1B	/94.1B	/94.1B

Index	Revision	Date	name				
2	Final as built	19-3-2025	M.Besseling	Drawn:	31-10-2024	elshofjo	
1	For approval	13-11-2024	besselingmi	Engineer:	19-9-2024	besselingmi	
				Approved:			
				Changed:			

KANON LOADING EQUIPMENT B.V.

Ref: P242068, B242352 Quote:
Order: 2011280786 Item: 001000

KANON LOADING EQUIPMENT
www.kanon.nl

Electromach B.V.
Jan Tinbergenstraat 193
7559 SP Hengelo
The Netherlands
US

Circuit diagram
PLC digital inputs

Int. Revision :	P242068A91
Drawing No.:	+JOCC-DCB2
2011280786-001000-24	Scale: 1 mm : 1 mm / A3
Refer to protection notice ISO 16016	Sheet: 131

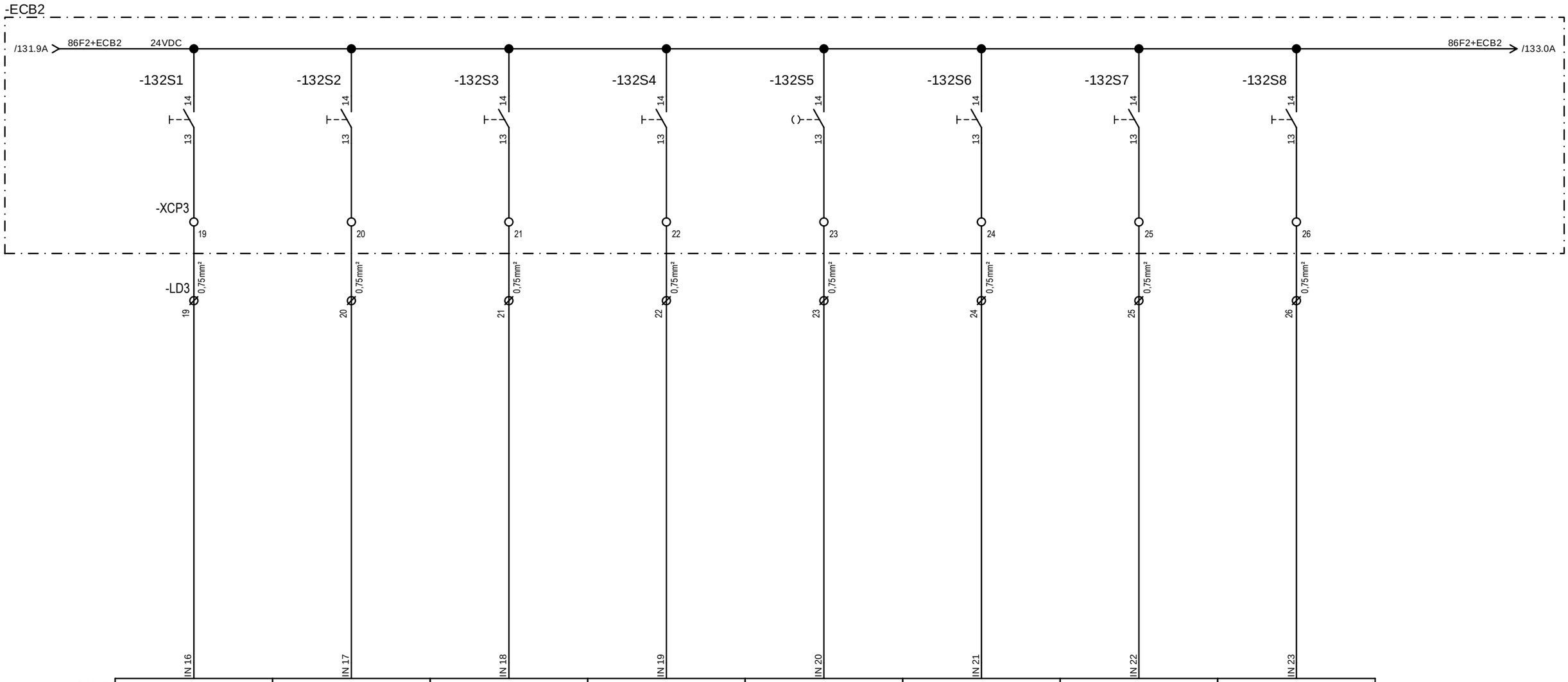

-94U1
1769-IQ32
Chassis: 2
Slot 1

DI_CP_PB_COUPL_OPN Coupler open	DI_CP_PB_COUPL_CLS Coupler close	DI_CP_PB_UP_ERS_OPN Upper ERS valve open	DI_CP_PB_UP_ERS_CLS Upper ERS valve close	DI_CP_KS_OVERRIDE Test override	DI_CP_PB_RST_2ND_ALM Reset 2nd stage alarm	DI_CP_PB_RST_1ST_ALM Reset 1st stage alarm	DI_CP_PB_RST_POWER Power reset
IN 16	IN 17	IN 18	IN 19	IN 20	IN 21	IN 22	IN 23
/94.1B	/94.1B	/94.1B	/94.1B	/94.1B	/94.1B	/94.1B	/94.1B

Index	Revision	Date	name
2	Final as built	19-3-2025	M.Besseling
1	For approval	13-11-2024	besselingmi

Drawn:	31-10-2024	elshofjo	
Engineer:	19-9-2024	besselingmi	
Approved:			
Changed:			

KANON LOADING EQUIPMENT B.V.

Ref: P242068, B242352 Quote:
Order: 2011280786 Item: 001000

KANON LOADING EQUIPMENT
www.kanon.nl

Electromach B.V.
Jan Tinbergenstraat 193
7559 SP Hengelo
The Netherlands
US

Circuit diagram
PLC digital inputs

Int. Revision :	P242068A91
Drawing No.:	+JOCC-DCB2
2011280786-001000-24	Scale: 1 mm : 1 mm / A3
Refer to protection notice ISO 16016	Sheet: 132

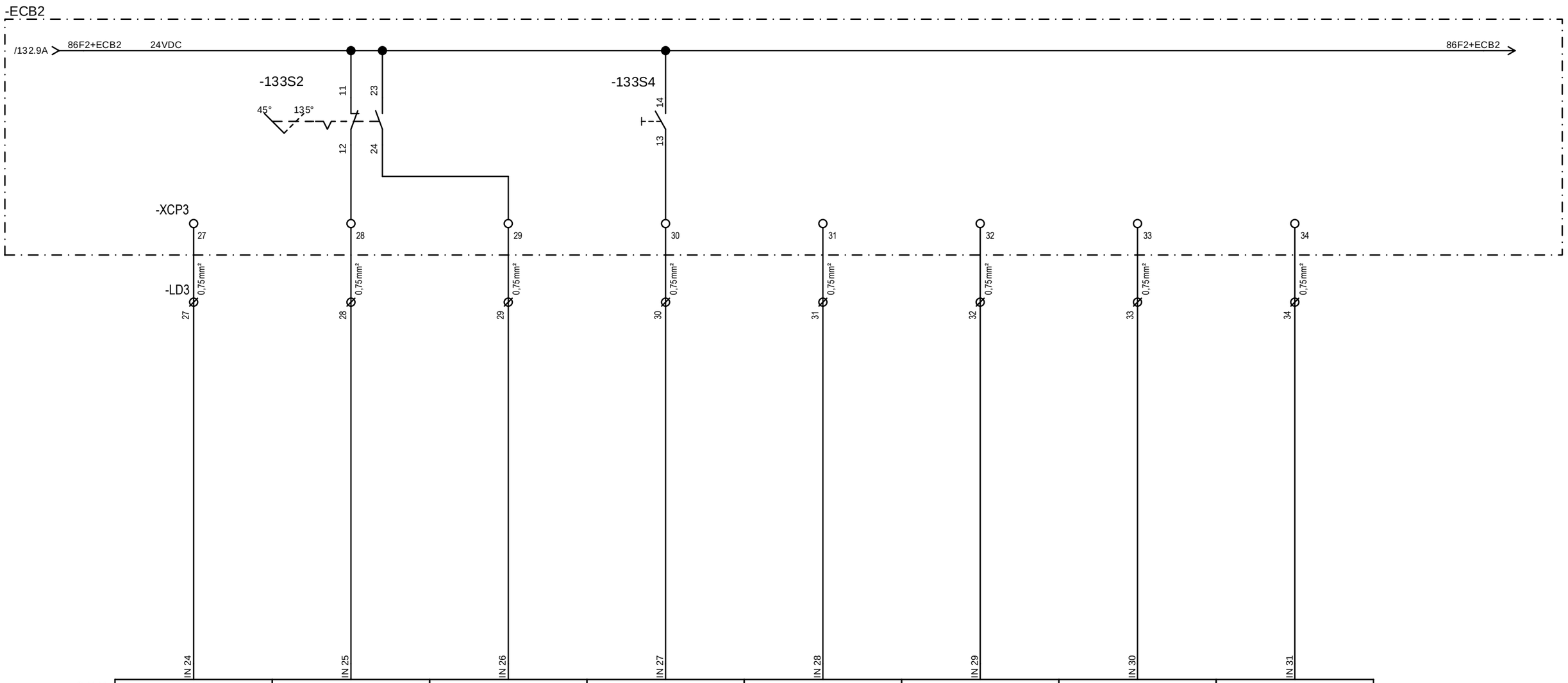

-94U1
1769-IQ32
Chassis: 2
Slot 1

DI_SPARE	DI_CP_SEL_MLA_1 MLA selection MLA-A selected	DI_CP_SEL_MLA_2 MLA selection MLA-B selected	DI_CP_PB_ERC_TEST Start ERC test	DI_SPARE	DI_SPARE	DI_SPARE	DI_SPARE
IN 24	IN 25	IN 26	IN 27	IN 28	IN 29	IN 30	IN 31
/94.1B	/94.1B	/94.1B	/94.1B	/94.1B	/94.1B	/94.1B	/94.1B

Index	Revision	Date	name			
3	Final as built	19-3-2025	M.Besseling	Drawn:	31-10-2024	elshofjo
2	Final for production	22-11-2024	besselingmi	Engineer:	19-9-2024	besselingmi
1	For approval	13-11-2024	besselingmi	Approved:		
				Changed:		

KANON LOADING EQUIPMENT B.V.

Ref: P242068, B242352 Quote:
Order: 2011280786 Item: 001000

KANON LOADING EQUIPMENT
www.kanon.nl

Electromach B.V.
Jan Tinbergenstraat 193
7559 SP Hengelo
The Netherlands
US

Circuit diagram
PLC digital inputs

Int. Revision :	P242068A91
Drawing No.:	+JOCC-DCB2
2011280786-001000-24	Scale: 1 mm : 1 mm / A3
Refer to protection notice ISO 16016	Sheet: 133

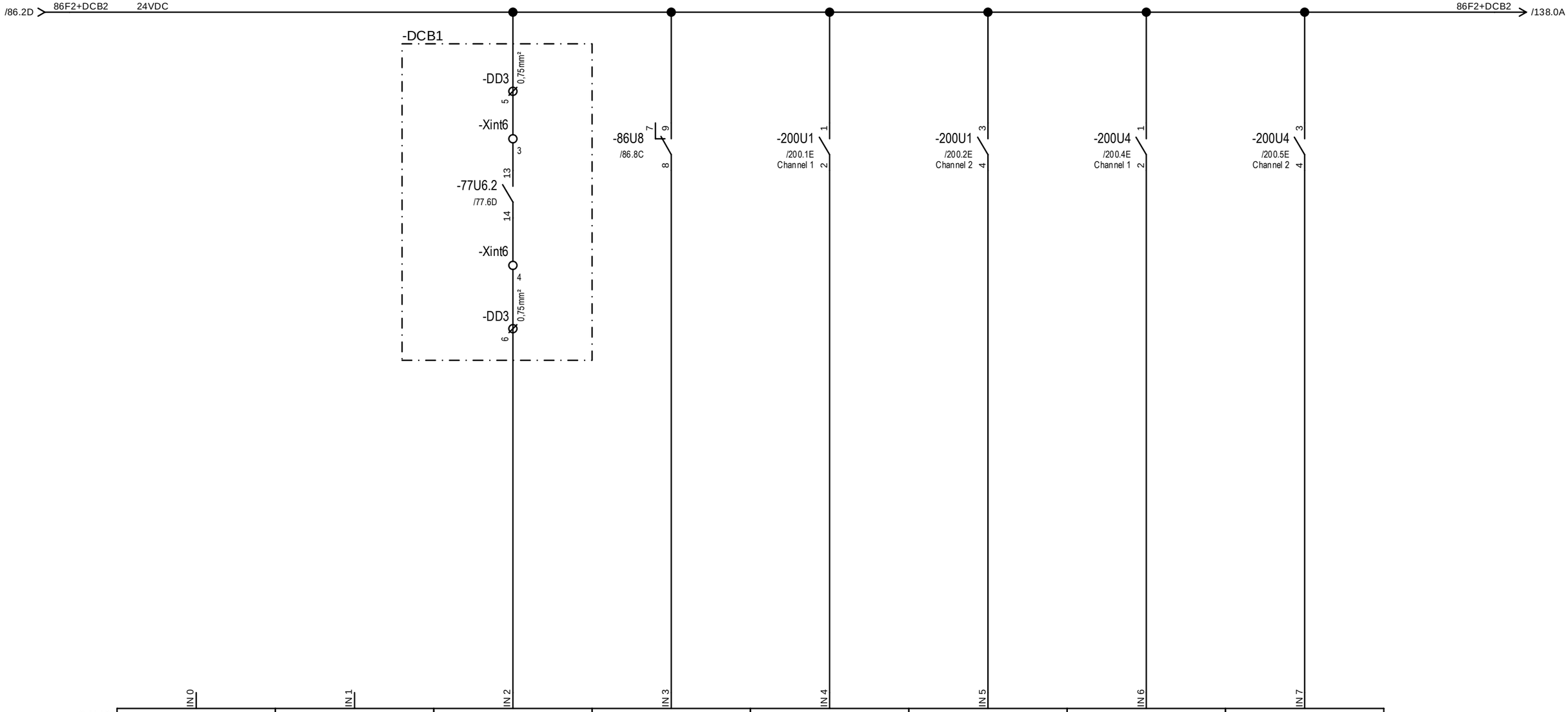

-94U2
1769-IQ32
Chassis: 2
Slot 2

IN 0	IN 1	IN 2	IN 3	IN 4	IN 5	IN 6	IN 7
DI_SPARE	DI_SPARE	DI_24VDC_OKAY 24VDC power supply okay	DI_SENS_FAIL sensor failure	DI_HPP_LVL_LOW_ALM HPP low oil level switch	DI_HPP_PRESS_LOW_ALM1 HPP low oil pressure switch accu 1	DI_HPP_PRESS_LOW_ALM2 HPP low oil pressure switch accu 2	DI_HPP_FB_Y15 HPP Feedback solenoid Y15
IN 0	IN 1	IN 2	IN 3	IN 4	IN 5	IN 6	IN 7
/94.2B	/94.2B	/94.2B	/94.2B	/94.2B	/94.2B	/94.2B	/94.2B

Index	Revision	Date	name				
3	Final as built	19-3-2025	M.Besseling	Drawn:	31-10-2024	elshofjo	
2	Final for production	22-11-2024	besselingmi	Engineer:	19-9-2024	besselingmi	
1	For approval	13-11-2024	besselingmi	Approved:			
				Changed:			

KANON LOADING EQUIPMENT B.V.

Ref: P242068, B242352 Quote:
Order: 2011280786 Item: 001000

KANON LOADING EQUIPMENT
www.kanon.nl

Electromach B.V.
Jan Tinbergenstraat 193
7559 SP Hengelo
The Netherlands
US

Circuit diagram
PLC digital inputs

Int. Revision :	P242068A91
Drawing No.:	+JOCC-DCB2
2011280786-001000-24	Scale: 1 mm : 1 mm / A3
Refer to protection notice ISO 16016	Sheet: 134

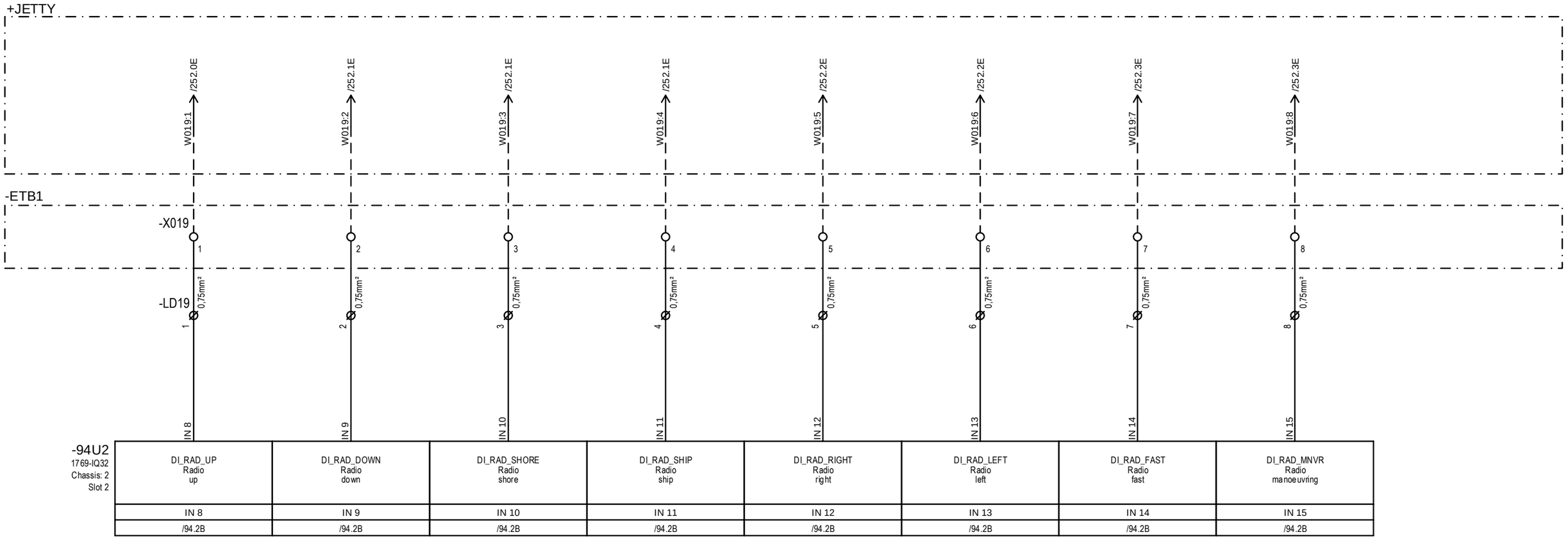

-94U2
1769-IQ32
Chassis: 2
Slot 2

DI_RAD_UP Radio up	DI_RAD_DOWN Radio down	DI_RAD_SHORE Radio shore	DI_RAD_SHIP Radio ship	DI_RAD_RIGHT Radio right	DI_RAD_LEFT Radio left	DI_RAD_FAST Radio fast	DI_RAD_MNVR Radio manoeuvring
IN 8	IN 9	IN 10	IN 11	IN 12	IN 13	IN 14	IN 15
/94.2B	/94.2B	/94.2B	/94.2B	/94.2B	/94.2B	/94.2B	/94.2B

Index	Revision	Date	name
3	Final as built	19-3-2025	M.Besseling
2	Final for production	22-11-2024	besselingmi
1	For approval	13-11-2024	besselingmi

Drawn:	31-10-2024	elshofjo	
Engineer:	19-9-2024	besselingmi	
Approved:			
Changed:			

KANON LOADING EQUIPMENT B.V.

Ref: P242068, B242352 Quote:
Order: 2011280786 Item: 001000

KANON LOADING EQUIPMENT
www.kanon.nl

Electromach B.V.
Jan Tinbergenstraat 193
7559 SP Hengelo
The Netherlands

Circuit diagram
PLC digital inputs

Int. Revision :	P242068A91
Drawing No.:	+JOCC-DCB2
2011280786-001000-24	Scale: 1 mm : 1 mm / A3
Refer to protection notice ISO 16016	Sheet: 135

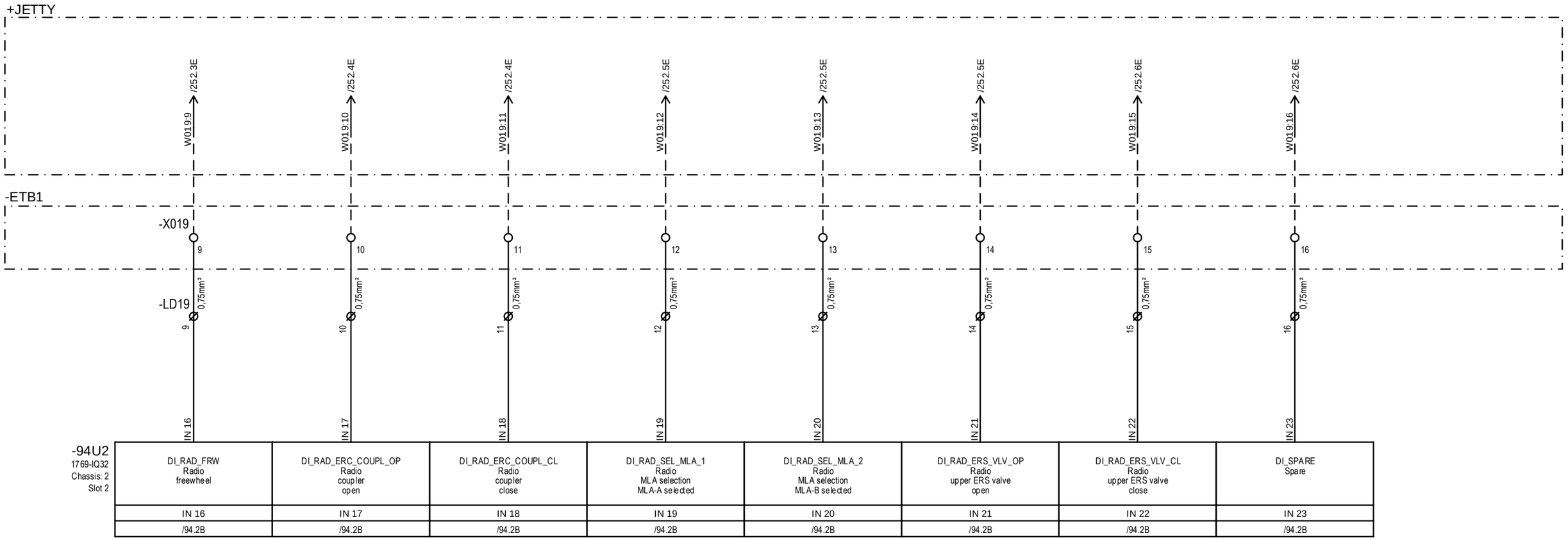

-94U2
1769-IQ32
Chassis: 2
Slot 2

DI_RAD_FRW Radio freewheel	DI_RAD_ERC_COUPL_OP Radio coupler open	DI_RAD_ERC_COUPL_CL Radio coupler close	DI_RAD_SEL_MLA_1 Radio MLA selection MLA-A selected	DI_RAD_SEL_MLA_2 Radio MLA selection MLA-B selected	DI_RAD_ERS_VLV_OP Radio upper ERS valve open	DI_RAD_ERS_VLV_CL Radio upper ERS valve close	DI_SPARE Spare
IN 16	IN 17	IN 18	IN 19	IN 20	IN 21	IN 22	IN 23
/94.2B	/94.2B	/94.2B	/94.2B	/94.2B	/94.2B	/94.2B	/94.2B

Index	Revision	Date	name
3	Final as built	19-3-2025	M.Besseling
2	Final for production	22-11-2024	besselingmi
1	For approval	13-11-2024	besselingmi

Drawn:	31-10-2024	elshofjo	
Engineer:	19-9-2024	besselingmi	
Approved:			
Changed:			

KANON LOADING EQUIPMENT B.V.

Ref: P242068, B242352 Quote:
Order: 2011280786 Item: 001000

KANON LOADING EQUIPMENT
www.kanon.nl

Electromach B.V.
Jan Tinbergenstraat 193
7559 SP Hengelo
The Netherlands

Circuit diagram
PLC digital inputs

Int. Revision :	P242068A91
Drawing No.:	+JOCC-DCB2
2011280786-001000-24	Scale: 1 mm : 1 mm / A3
Refer to protection notice ISO 16016	Sheet: 136

	IN 24	IN 25	IN 26	IN 27	IN 28	IN 29	IN 30	IN 31
-94U2 1769-IQ32 Chassis: 2 Slot 2	DI_SPARE Spare	DI_SPARE Spare	DI_SPARE Spare	DI_SPARE Spare	DI_SPARE Spare	DI_SPARE Spare	DI_SPARE Spare	DI_SPARE Spare
	IN 24	IN 25	IN 26	IN 27	IN 28	IN 29	IN 30	IN 31
	/94.2B	/94.2B	/94.2B	/94.2B	/94.2B	/94.2B	/94.2B	/94.2B

Index	Revision	Date	name			
3	Final as built	19-3-2025	M.Besseling	Drawn:	31-10-2024	elshofjo
2	Final for production	22-11-2024	besselingmi	Engineer:	19-9-2024	besselingmi
1	For approval	13-11-2024	besselingmi	Approved:		
				Changed:		

KANON LOADING EQUIPMENT B.V.

Ref: P242068, B242352 Quote:

Order: 2011280786 Item: 001000

KANON LOADING EQUIPMENT

www.kanon.nl

Electromach B.V.
Jan Tinbergenstraat 193
7559 SP Hengelo
The Netherlands
US

Circuit diagram
PLC digital inputs

Int. Revision :	P242068A91
Drawing No.:	+JOCC-DCB2
2011280786-001000-24	Scale: 1 mm : 1 mm / A3
Refer to protection notice ISO 16016	Sheet: 137

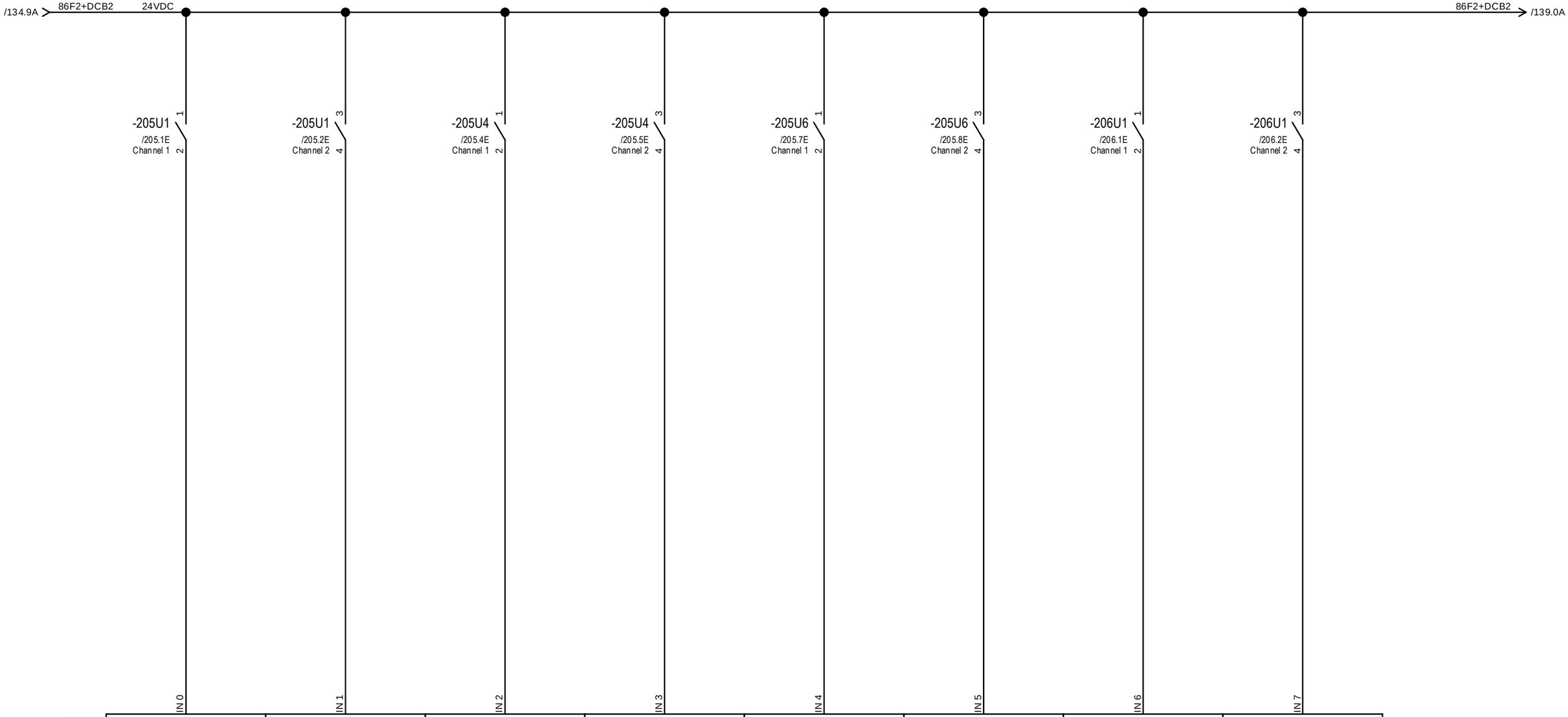

-94U5
1769-IQ32
Chassis: 2
Slot 3

DI_HPP_PEN_UP HPP pendant up	DI_HPP_PEN_DOWN HPP pendant down	DI_HPP_PEN_SHORE HPP pendant shore	DI_HPP_PEN_SHIP HPP pendant ship	DI_HPP_PEN_RIGHT HPP pendant right	DI_HPP_PEN_LEFT HPP pendant left	DI_HPP_PEN_COUPL_OPN HPP pendant coupler open	DI_HPP_PEN_COUPL_CLS HPP pendant coupler close
IN 0	IN 1	IN 2	IN 3	IN 4	IN 5	IN 6	IN 7
/94.5B	/94.5B	/94.5B	/94.5B	/94.5B	/94.5B	/94.5B	/94.5B

Index	Revision	Date	name					
3	Final as built	19-3-2025	M.Besseling	Drawn:	31-10-2024	elshofjo	KANON LOADING EQUIPMENT B.V.	
2	Final for production	22-11-2024	besselingmi	Engineer:	19-9-2024	besselingmi		
1	For approval	13-11-2024	besselingmi	Approved:			Ref: P242068, B242352	Quote:
				Changed:			Order: 2011280786	Item: 001000

KANON LOADING EQUIPMENT
www.kanon.nl

Electromach B.V.
Jan Tinbergenstraat 193
7559 SP Hengelo
The Netherlands
US

Circuit diagram
PLC digital inputs

Int. Revision :	P242068A91
Drawing No.:	+JOCC-DCB2
2011280786-001000-24	Scale: 1 mm : 1 mm / A3
Refer to protection notice ISO 16016	Sheet: 138

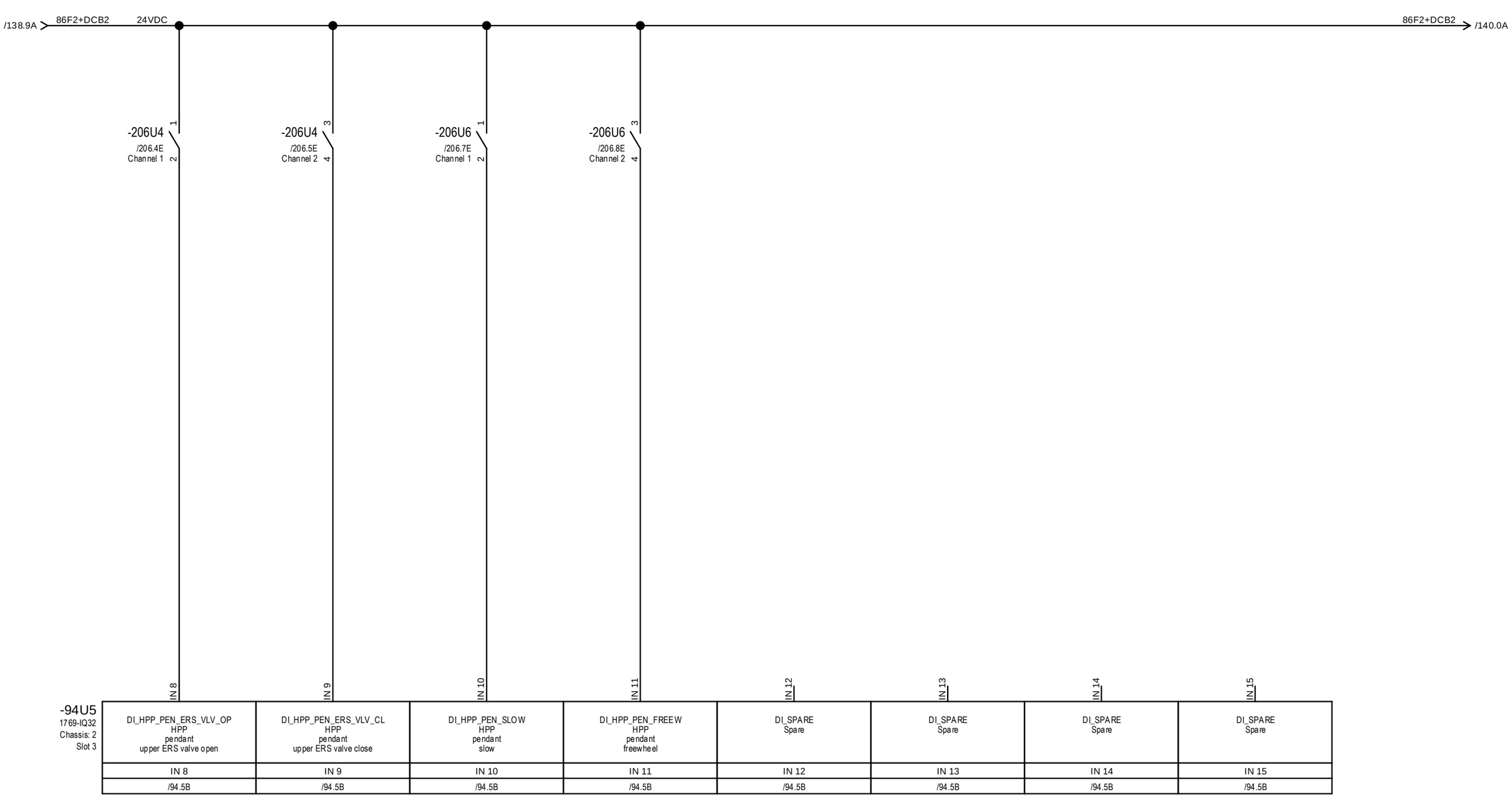

-94U5
1769-IQ32
Chassis: 2
Slot 3

IN 8	IN 9	IN 10	IN 11	IN 12	IN 13	IN 14	IN 15
DI_HPP_PEN_ERS_VLV_OP HPP pendant upper ERS valve open	DI_HPP_PEN_ERS_VLV_CL HPP pendant upper ERS valve close	DI_HPP_PEN_SLOW HPP pendant slow	DI_HPP_PEN_FREEW HPP pendant freewheel	DI_SPARE Spare	DI_SPARE Spare	DI_SPARE Spare	DI_SPARE Spare
/94.5B	/94.5B	/94.5B	/94.5B	/94.5B	/94.5B	/94.5B	/94.5B

Index	Revision	Date	name				
3	Final as built	19-3-2025	M.Besseling	Drawn:	31-10-2024	elshofjo	
2	Final for production	22-11-2024	besselingmi	Engineer:	19-9-2024	besselingmi	
1	For approval	13-11-2024	besselingmi	Approved:			
				Changed:			

KANON LOADING EQUIPMENT B.V.

Ref: P242068, B242352 Quote:
Order: 2011280786 Item: 001000

KANON LOADING EQUIPMENT
www.kanon.nl

Electromach B.V.
Jan Tinbergenstraat 193
7559 SP Hengelo
The Netherlands
US

Circuit diagram
PLC digital inputs

Int. Revision :	P242068A91
Drawing No.:	+JOCC-DCB2
2011280786-001000-24	Scale: 1 mm : 1 mm / A3
Refer to protection notice ISO 16016	Sheet: 139

/139.9A 86F2+DCB2 24VDC

86F2+DCB2 /141.0A

-210U1 /210.1E Channel 1 (1, 2)

-210U1 /210.2E Channel 2 (3, 4)

-210U4 /210.4E Channel 1 (1, 2)

-94U5
1769-IQ32
Chassis: 2
Slot 3

IN 16	IN 17	IN 18	IN 19	IN 20	IN 21	IN 22	IN 23
DI_1_VESSEL_CONNECTED MLA-A Vessel connected	DI_1_ERC_SENS_PROD MLA-A ERC Sensor product	DI_SPARE Spare	DI_1_ERS_VALVE_OPN MLA-A Upper ERS valve opened	DI_SPARE Spare	DI_SPARE Spare	DI_SPARE Spare	DI_SPARE Spare
IN 16	IN 17	IN 18	IN 19	IN 20	IN 21	IN 22	IN 23
/94.5B	/94.5B	/94.5B	/94.5B	/94.5B	/94.5B	/94.5B	/94.5B

Index	Revision	Date	name			
3	Final as built	19-3-2025	M.Besseling	Drawn:	31-10-2024	elshofjo
2	Final for production	22-11-2024	besselingmi	Engineer:	19-9-2024	besselingmi
1	For approval	13-11-2024	besselingmi	Approved:		
				Changed:		

KANON LOADING EQUIPMENT B.V.

Ref: P242068, B242352 Quote:

Order: 2011280786 Item: 001000

KANON LOADING EQUIPMENT
www.kanon.nl

Electromach B.V.
Jan Tinbergenstraat 193
7559 SP Hengelo
The Netherlands
US

Circuit diagram
PLC digital inputs

Int. Revision :	P242068A91
Drawing No.:	+JOCC-DCB2
2011280786-001000-24	Scale: 1 mm : 1 mm / A3
Refer to protection notice ISO 16016	Sheet: 140

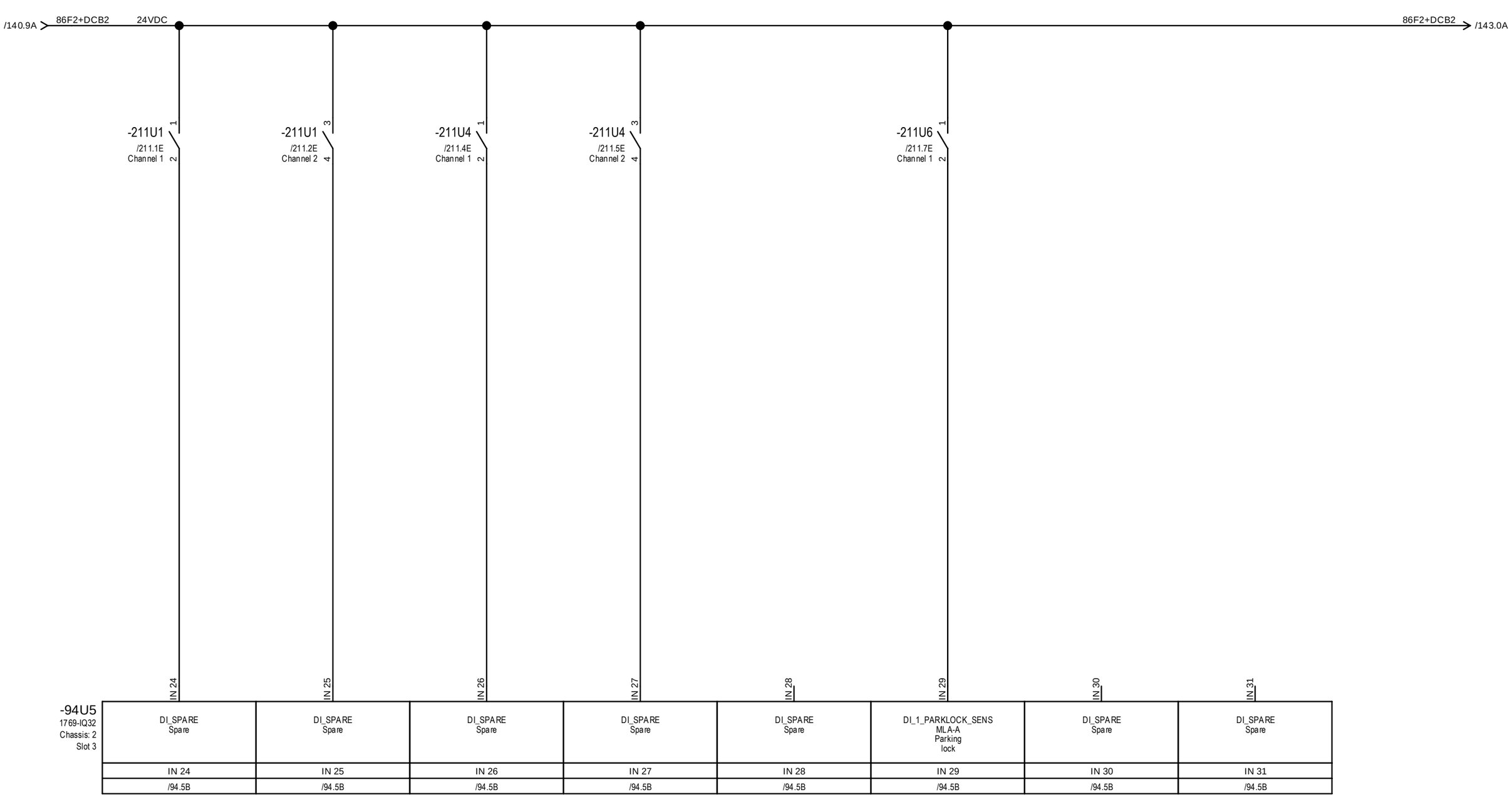

Index	Revision	Date	name								
3	Final as built	19-3-2025	M.Besseling	Drawn:	31-10-2024	elshofjo	**KANON LOADING EQUIPMENT B.V.**		**Electromach B.V.**	Circuit diagram	Int. Revision :	P242068A91
2	Final for production	22-11-2024	besselingmi	Engineer:	19-9-2024	besselingmi			Jan Tinbergenstraat 193	PLC digital inputs	Drawing No.:	+JOCC-DCB2
1	For approval	13-11-2024	besselingmi	Approved:			Ref: P242068, B242352	Quote:	7559 SP Hengelo		2011280786-001000-24	Scale: 1 mm : 1 mm / A3
				Changed:			Order: 2011280786	Item: 001000	The Netherlands		Refer to protection notice ISO 16016	Sheet: 141

KANON LOADING EQUIPMENT
www.kanon.nl
US

-94U6 1769-IQ32 Chassis: 2 Slot 4	IN 0	IN 1	IN 2	IN 3	IN 4	IN 5	IN 6	IN 7
	DI_SPARE	DI_SPARE	DI_SPARE	DI_SPARE	DI_SPARE	DI_SPARE	DI_SPARE	DI_SPARE
	IN 0	IN 1	IN 2	IN 3	IN 4	IN 5	IN 6	IN 7
	/94.6B	/94.6B	/94.6B	/94.6B	/94.6B	/94.6B	/94.6B	/94.6B

Index	Revision	Date	name						
3	Final as built	19-3-2025	M.Besseling	Drawn:	31-10-2024	elshofjo	**KANON LOADING EQUIPMENT B.V.**		
2	Final for production	22-11-2024	besselingmi	Engineer:	19-9-2024	besselingmi			
1	For approval	13-11-2024	besselingmi	Approved:			Ref: P242068, B242352	Quote:	
				Changed:			Order: 2011280786	Item: 001000	

KANON LOADING EQUIPMENT
www.kanon.nl

Electromach B.V.
Jan Tinbergenstraat 193
7559 SP Hengelo
The Netherlands

Circuit diagram
PLC digital inputs

Int. Revision :	P242068A91
Drawing No.:	+JOCC-DCB2
2011280786-001000-24	Scale: 1 mm : 1 mm / A3
Refer to protection notice ISO 16016	Sheet: 142

/141.9A 86F2+DCB2 24VDC

86F2+DCB2 /144.0A

-220U1 /220.1E Channel 1 — 1 / 2

-220U1 /220.2E Channel 2 — 3 / 4

-220U4 /220.4E Channel 1 — 1 / 2

-94U6
1769-IQ32
Chassis: 2
Slot 4

IN 8	IN 9	IN 10	IN 11	IN 12	IN 13	IN 14	IN 15
DI_2_VESSEL_CONNECTED MLA-B Vessel connected	DI_2_ERC_SENS_PROD MLA-B ERC Sensor product	DI_SPARE Spare	DI_2_ERS_VALVE_OPN MLA-B Upper ERS valve opened	DI_SPARE Spare	DI_SPARE Spare	DI_SPARE Spare	DI_SPARE Spare
IN 8	IN 9	IN 10	IN 11	IN 12	IN 13	IN 14	IN 15
/94.6B	/94.6B	/94.6B	/94.6B	/94.6B	/94.6B	/94.6B	/94.6B

Index	Revision	Date	name			
3	Final as built	19-3-2025	M.Besseling	Drawn:	31-10-2024	elshofjo
2	Final for production	22-11-2024	besselingmi	Engineer:	19-9-2024	besselingmi
1	For approval	13-11-2024	besselingmi	Approved:		
				Changed:		

KANON LOADING EQUIPMENT B.V.

Ref: P242068, B242352 Quote:

Order: 2011280786 Item: 001000

KANON LOADING EQUIPMENT
www.kanon.nl

Electromach B.V.
Jan Tinbergenstraat 193
7559 SP Hengelo
The Netherlands

Circuit diagram
PLC digital inputs

Int. Revision :	P242068A91
Drawing No.:	+JOCC-DCB2
2011280786-001000-24	Scale: 1 mm : 1 mm / A3
Refer to protection notice ISO 16016	Sheet: 143

/143.9A 86F2+DCB2 24VDC

86F2+DCB2

-221U1 /221.1E Channel 1 1 2

-221U1 /221.2E Channel 2 3 4

-221U4 /221.4E Channel 1 1 2

-221U4 /221.5E Channel 2 3 4

-221U6 /221.7E Channel 1 1 2

-94U6
1769-IQ32
Chassis: 2
Slot 4

IN 16	IN 17	IN 18	IN 19	IN 20	IN 21	IN 22	IN 23
DI_SPARE Spare	DI_SPARE Spare	DI_SPARE Spare	DI_SPARE Spare	DI_SPARE Spare	DI_2_PARKLOCK_SENS MLA-B Parking lock	DI_SPARE Spare	DI_SPARE Spare
IN 16	IN 17	IN 18	IN 19	IN 20	IN 21	IN 22	IN 23
/94.6B	/94.6B	/94.6B	/94.6B	/94.6B	/94.6B	/94.6B	/94.6B

Index	Revision	Date	name				
3	Final as built	19-3-2025	M.Besseling	Drawn:	31-10-2024	elshofjo	
2	Final for production	22-11-2024	besselingmi	Engineer:	19-9-2024	besselingmi	
1	For approval	13-11-2024	besselingmi	Approved:			
				Changed:			

KANON LOADING EQUIPMENT B.V.

Ref: P242068, B242352 Quote:

Order: 2011280786 Item: 001000

KANON LOADING EQUIPMENT
www.kanon.nl

Electromach B.V.
Jan Tinbergenstraat 193
7559 SP Hengelo
The Netherlands
US

Circuit diagram
PLC digital inputs

Int. Revision :	P242068A91
Drawing No.:	+JOCC-DCB2
2011280786-001000-24	Scale: 1 mm : 1 mm / A3
Refer to protection notice ISO 16016	Sheet: 144

-94U6
1769-IQ32
Chassis: 2
Slot 4

IN 24	IN 25	IN 26	IN 27	IN 28	IN 29	IN 30	IN 31
DI_SPARE Spare	DI_SPARE Spare	DI_SPARE Spare	DI_SPARE Spare	DI_SPARE Spare	DI_SPARE Spare	DI_SPARE Spare	DI_SPARE Spare
IN 24	IN 25	IN 26	IN 27	IN 28	IN 29	IN 30	IN 31
/94.6B	/94.6B	/94.6B	/94.6B	/94.6B	/94.6B	/94.6B	/94.6B

Index	Revision	Date	name				
2	Final as built	19-3-2025	M.Besseling	Drawn:	31-10-2024	elshofjo	
1	For approval	13-11-2024	besselingmi	Engineer:	19-9-2024	besselingmi	
				Approved:			
				Changed:			

KANON LOADING EQUIPMENT B.V.

Ref: P242068, B242352 Quote:
Order: 2011280786 Item: 001000

KANON LOADING EQUIPMENT
www.kanon.nl

Electromach B.V.
Jan Tinbergenstraat 193
7559 SP Hengelo
The Netherlands
US

Circuit diagram
PLC digital inputs

Int. Revision :	P242068A91
Drawing No.:	+JOCC-DCB2
2011280786-001000-24	Scale: 1 mm : 1 mm / A3
Refer to protection notice ISO 16016	Sheet: 145

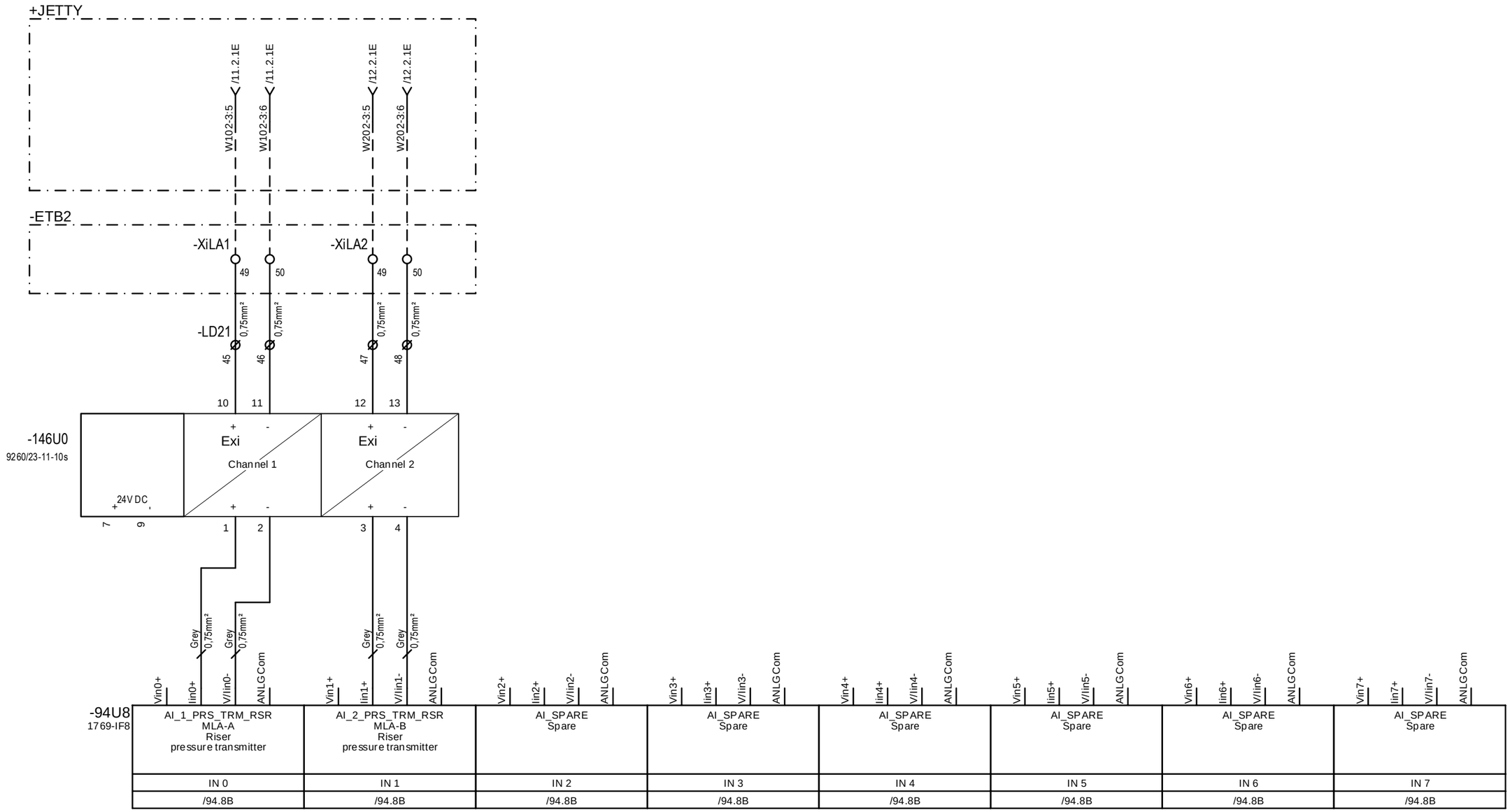

Index	Revision	Date	name	Drawn:	31-10-2024	elshofjo
2	Final as built	19-3-2025	M.Besseling	Engineer:	19-9-2024	besselingmi
1	For approval	13-11-2024	besselingmi	Approved:		
				Changed:		

KANON LOADING EQUIPMENT B.V.

Ref: P242068, B242352 Quote:

Order: 2011280786 Item: 001000

KANON LOADING EQUIPMENT

www.kanon.nl

Electromach B.V.
Jan Tinbergenstraat 193
7559 SP Hengelo
The Netherlands

Circuit diagram
PLC analog inputs

Int. Revision :	P242068A91
Drawing No.:	+JOCC-DCB2
2011280786-001000-24	Scale: 1 mm : 1 mm / A3
Refer to protection notice ISO 16016	Sheet: 146

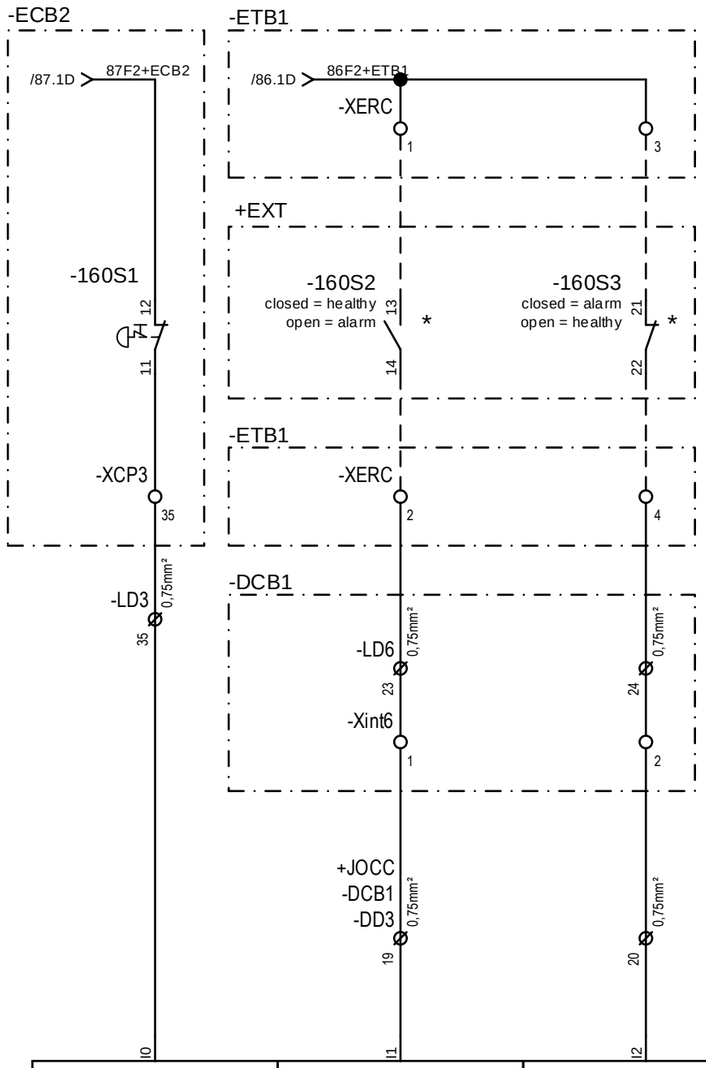

-96U4 772142 Chassis : 3 Slot : 1							
DI_CP_MS_MAN_ERC Manual ERC release	DI_CLIENT_ERC_ALM1 client input ERC alarm 1	DI_CLIENT_ERC_ALM2 client input ERC alarm 2	DI_SPARE Spare	DI_SPARE Spare	DI_SPARE Spare	DI_SPARE Spare	DI_SPARE Spare
/96.4B	/96.4B	/96.4B	/96.4B	/96.4B	/96.4B	/96.4B	/96.4B

*NOTE:
Terminal 1, 2 are linked by means of yellow wire.
If client ERC is required, remove link on terminals 1, 2 and connect ERC alarm contacts on terminals 1, 2.

Index	Revision	Date	name				
3	Final as built	19-3-2025	M.Besseling	Drawn:	31-10-2024	elshofjo	
2	Final for production	22-11-2024	besselingmi	Engineer:	19-9-2024	besselingmi	
1	For approval	13-11-2024	besselingmi	Approved:			
				Changed:			

KANON LOADING EQUIPMENT B.V.

Ref: P242068, B242352 Quote:
Order: 2011280786 Item: 001000

KANON LOADING EQUIPMENT
www.kanon.nl

Electromach B.V.
Jan Tinbergenstraat 193
7559 SP Hengelo
The Netherlands

Circuit diagram
safety digital inputs

Int. Revision :	P242068A91
Drawing No.:	+JOCC-DCB2
2011280786-001000-24	Scale: 1 mm : 1 mm / A3
Refer to protection notice ISO 16016	Sheet: 160

/96.4B	/96.4B	/96.4B	/96.4B
DO_SPARE Spare	DO_SPARE Spare	DO_SPARE Spare	DO_SPARE Spare
00	01	02	03

-96U4
772142
Chassis : 3
Slot : 1

Index	Revision	Date	name							
2	Final as built	19-3-2025	M.Besseling	Drawn:	31-10-2024	elshofjo	**KANON LOADING EQUIPMENT B.V.**			
1	For approval	13-11-2024	besselingmi	Engineer:	19-9-2024	besselingmi				
				Approved:			Ref: P242068, B242352	Quote:		
				Changed:			Order: 2011280786	Item: 001000		

KANON LOADING EQUIPMENT
www.kanon.nl

Electromach B.V.
Jan Tinbergenstraat 193
7559 SP Hengelo
The Netherlands
US

Circuit diagram
safety digital outputs

Int. Revision :	P242068A91
Drawing No.:	+JOCC-DCB2
2011280786-001000-24	Scale: 1 mm : 1 mm / A3
Refer to protection notice ISO 16016	Sheet: 161

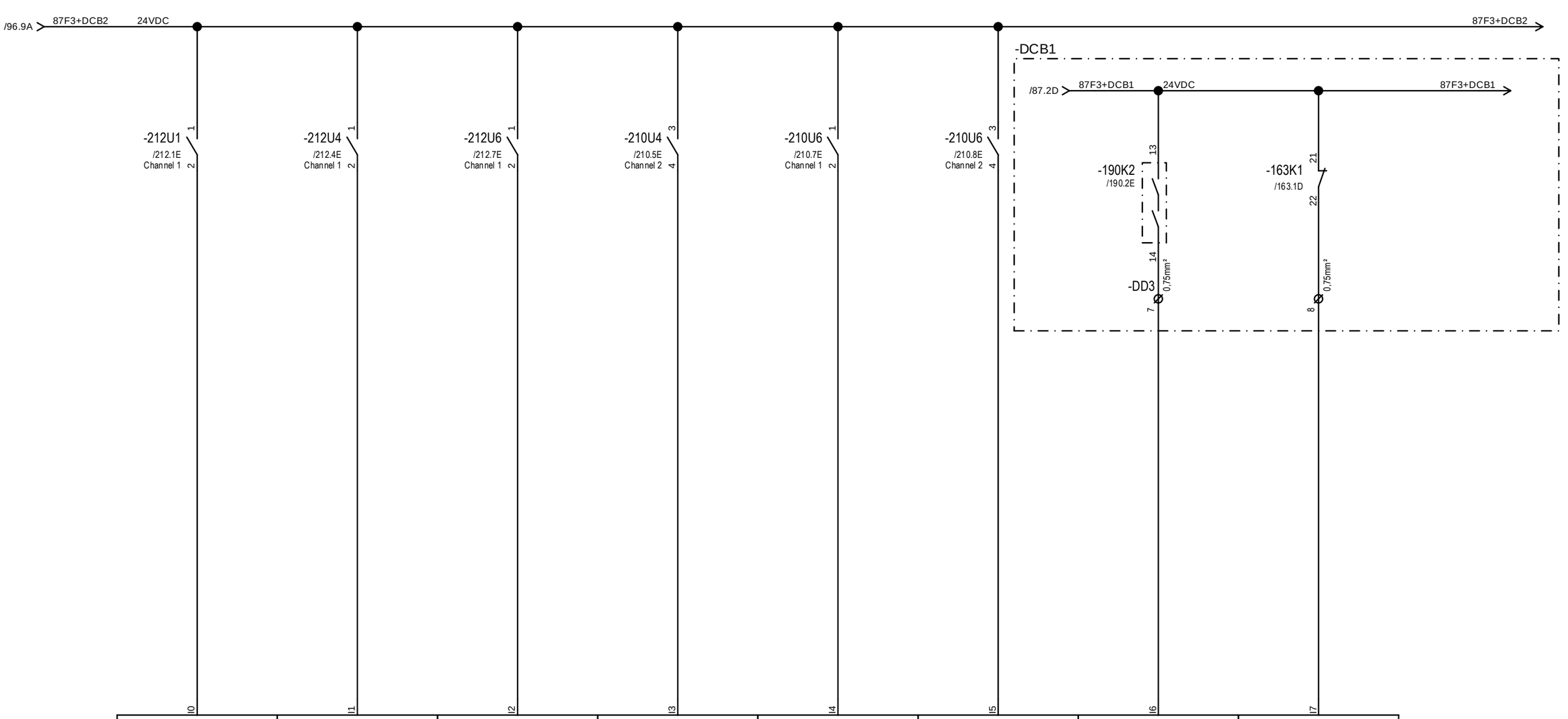

-96U6 772142 Chassis : 3 Slot : 2	I0	I1	I2	I3	I4	I5	I6	I7
	DI_1_APX_1ST_ALM MLA-A Apex 1st stage alarm	DI_1_APX_2ND_ALM1 MLA-A Apex 2nd stage alarm 1	DI_1_APX_2ND_ALM2 MLA-A Apex 2nd stage alarm 2	DI_1_ERS_VALVE_CLS1 MLA-A Upper ERS valve closed 1	DI_1_ERS_VALVE_CLS2 MLA-A Upper ERS valve closed 2	DI_1_ERS_VALVE_CLS3 MLA-A Upper ERS valve closed 3	DI_1_COM_FUSE MLA-A Common fuse alarm	DI_1_FB_SR_Y7.1-2 MLA-A Feedback safety relay Y7.1-2
	/96.6B	/96.6B	/96.6B	/96.6B	/96.6B	/96.6B	/96.6B	/96.6B

Index	Revision	Date	name
2	Final as built	19-3-2025	M.Besseling
1	For approval	13-11-2024	besselingmi

Drawn:	31-10-2024	elshofjo	
Engineer:	19-9-2024	besselingmi	
Approved:			
Changed:			

KANON LOADING EQUIPMENT B.V.

Ref: P242068, B242352 Quote:
Order: 2011280786 Item: 001000

KANON LOADING EQUIPMENT
www.kanon.nl

Electromach B.V.
Jan Tinbergenstraat 193
7559 SP Hengelo
The Netherlands
US

Circuit diagram
safety digital inputs

Int. Revision :	P242068A91
Drawing No.:	+JOCC-DCB2
2011280786-001000-24	Scale: 1 mm : 1 mm / A3
Refer to protection notice ISO 16016	Sheet: 162

/96.6B	/96.6B	/96.6B	/96.6B
-96U6 772142 Chassis : 3 Slot : 2			
DO_1_SOL_Y7_ERC MLA-A ERC solenoid Y7.1 / Y7.2	DO_1_SOL_Y8_FRW MLA-A freewheel solenoid Y8	DO_1_SOL_Y13_BV MLA-A ERC ball valve open	DO_1_SOL_Y14_BV MLA-A ERC ball valve close

O0 O1 O2 O3

-DCB1

-DD3

9 0,75mm² 10 0,75mm² 11 0,75mm² 12 0,75mm²

-163K1 DC 24V A1 M A2

-163K2 DC 24V A1 TP1 A2

-163K3 DC 24V A1 M A2

-163K4 DC 24V A1 M A2

/87.3D 87F3-DCB1 — 87F3-DCB1

13 14 /190.1B
21 22 /162.8B

L LO /190.3B
NI N /190.3B

13 14 /190.7B
21 22

13 14 /190.8B
21 22

2	*Final as built*	*19-3-2025*	*M.Besseling*	Drawn:	*31-10-2024*	*elshofjo*	***KANON LOADING EQUIPMENT B.V.***		***Electromach B.V.*** *Jan Tinbergenstraat 193* *7559 SP Hengelo* *The Netherlands*	*Circuit diagram* *safety digital outputs*	Int. Revision :	*P242068A91*
1	*For approval*	*13-11-2024*	*besselingmi*	Engineer:	*19-9-2024*	*besselingmi*					Drawing No.:	*+JOCC-DCB2*
				Approved:			Ref: *P242068, B242352*	Quote:			*2011280786-001000-24*	Scale: *1 mm : 1 mm / A3*
Index	Revision	Date	name	Changed:			Order: *2011280786*	Item: *001000*			Refer to protection notice ISO 16016	Sheet: *163*

KANON LOADING EQUIPMENT
www.kanon.nl

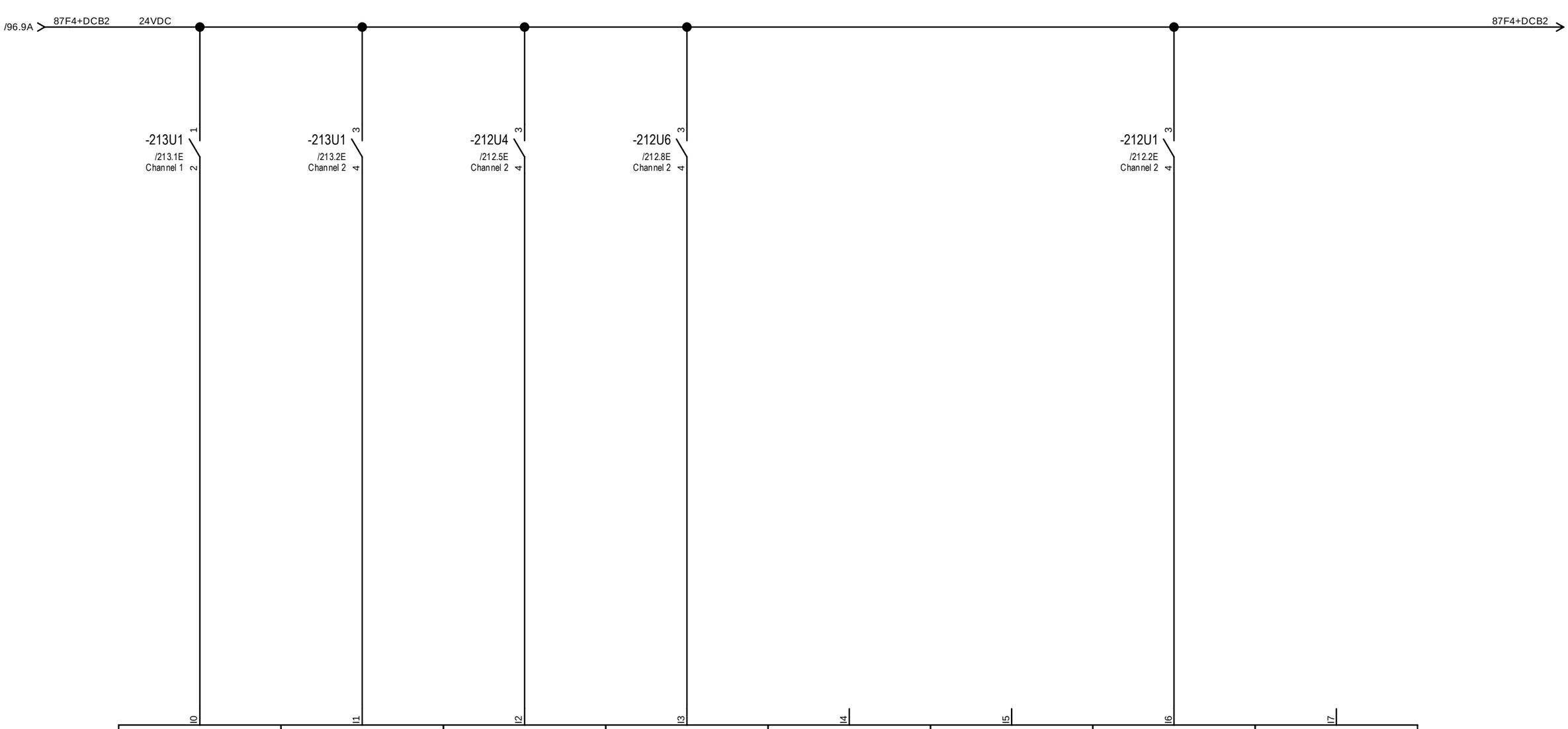

-96U7 772142 Chassis : 3 Slot : 3							
DI_1_ROT_LFT_1ST_ALM MLA-A Rotation left 1st stage alarm	DI_1_ROT_RGT_1ST_ALM MLA-A Rotation right 1st stage alarm	DI_1_ROT_2ND_ALM1 MLA-A Rotation 2nd stage alarm 1	DI_1_ROT_2ND_ALM2 MLA-A Rotation 2nd stage alarm 2	DI_SPARE Spare	DI_SPARE Spare	DI_1_ERC_ARM_VLV MLA-A ERC arming valve sensor	DI_SPARE Spare
/96.7B	/96.7B	/96.7B	/96.7B	/96.7B	/96.7B	/96.7B	/96.7B

Index	Revision	Date	name				
2	Final as built	19-3-2025	M.Besseling	Drawn:	31-10-2024	elshofjo	
1	For approval	13-11-2024	besselingmi	Engineer:	19-9-2024	besselingmi	
				Approved:			
				Changed:			

KANON LOADING EQUIPMENT B.V.

Ref: P242068, B242352 Quote:

Order: 2011280786 Item: 001000

KANON LOADING EQUIPMENT

www.kanon.nl

Electromach B.V.
Jan Tinbergenstraat 193
7559 SP Hengelo
The Netherlands
US

Circuit diagram
safety digital inputs

Int. Revision :	P242068A91
Drawing No.:	+JOCC-DCB2
2011280786-001000-24	Scale: 1 mm : 1 mm / A3
Refer to protection notice ISO 16016	Sheet: 164

	/96.7B	/96.7B	/96.7B	/96.7B
-96U7 772142 Chassis : 3 Slot : 3				
	DO_SPARE Spare	DO_SPARE Spare	DO_SPARE Spare	DO_SPARE Spare
	00	01	02	03

Index	Revision	Date	name			
2	Final as built	19-3-2025	M.Besseling	Drawn:	31-10-2024	elshofjo
1	For approval	13-11-2024	besselingmi	Engineer:	19-9-2024	besselingmi
				Approved:		
				Changed:		

KANON LOADING EQUIPMENT B.V.

Ref: P242068, B242352 Quote:

Order: 2011280786 Item: 001000

KANON LOADING EQUIPMENT

www.kanon.nl

Electromach B.V.
Jan Tinbergenstraat 193
7559 SP Hengelo
The Netherlands

Circuit diagram
safety digital outputs

Int. Revision :	P242068A91
Drawing No.:	+JOCC-DCB2
2011280786-001000-24	Scale: 1 mm : 1 mm / A3
Refer to protection notice ISO 16016	Sheet: 165

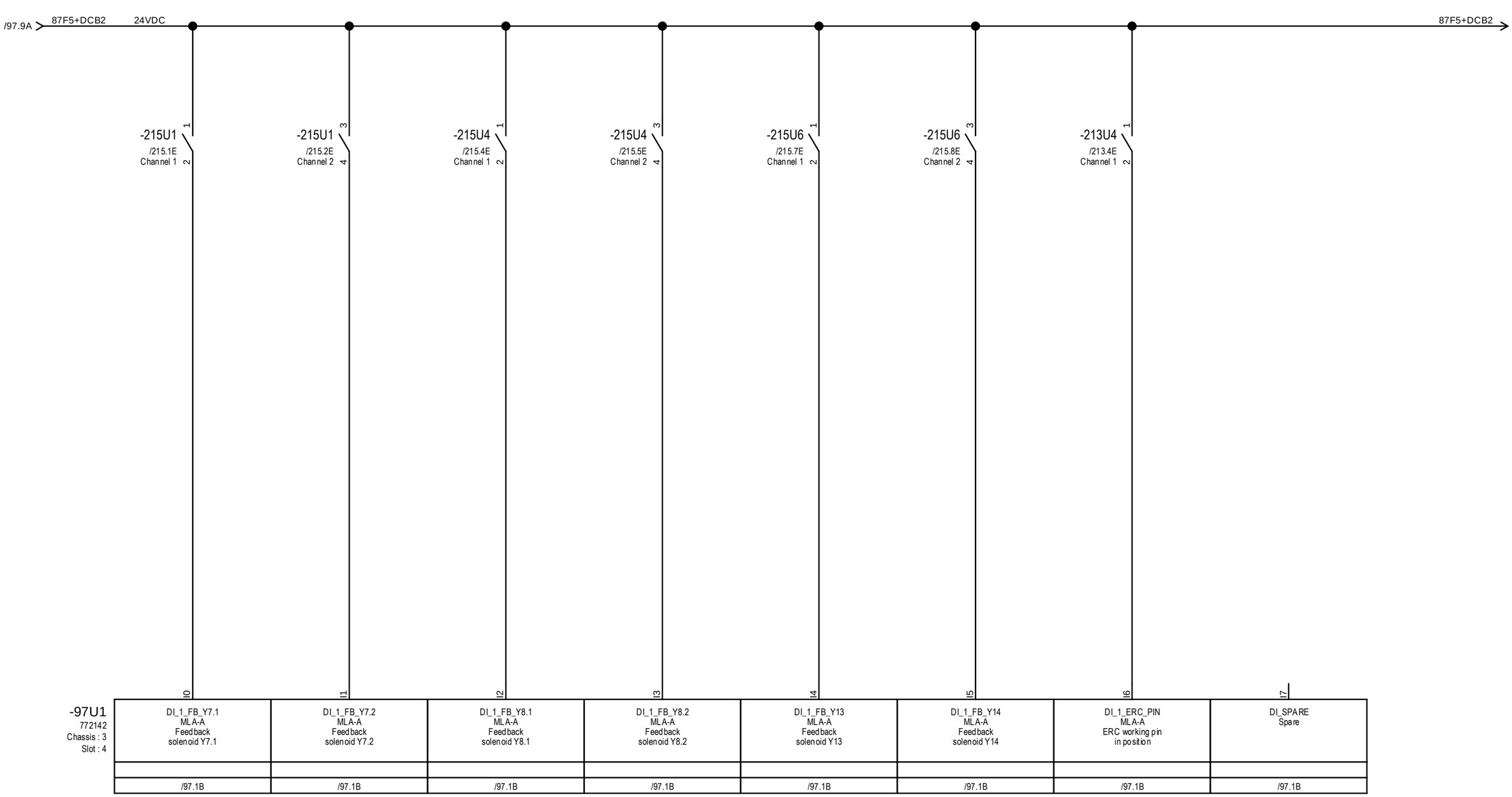

Index	Revision	Date	name						
2	Final as built	19-3-2025	M.Besseling	Drawn:	31-10-2024	elshofjo	**KANON LOADING EQUIPMENT B.V.**		
1	For approval	13-11-2024	besselingmi	Engineer:	19-9-2024	besselingmi			
				Approved:			Ref: P242068, B242352	Quote:	
				Changed:			Order: 2011280786	Item: 001000	

KANON LOADING EQUIPMENT
www.kanon.nl

Electromach B.V.
Jan Tinbergenstraat 193
7559 SP Hengelo
The Netherlands
US

Circuit diagram
safety digital inputs

Int. Revision :	P242068A91
Drawing No.:	+JOCC-DCB2
2011280786-001000-24	Scale: 1 mm : 1 mm / A3
Refer to protection notice ISO 16016	Sheet: 166

	/97.1B	/97.1B	/97.1B	/97.1B
-97U1 772142 Chassis : 3 Slot : 4				
	DO_SPARE	DO_SPARE	DO_SPARE	DO_SPARE
	O0	O1	O2	O3

Index	Revision	Date	name			
2	Final as built	19-3-2025	M.Besseling	Drawn:	31-10-2024	elshofjo
1	For approval	13-11-2024	besselingmi	Engineer:	19-9-2024	besselingmi
				Approved:		
				Changed:		

KANON LOADING EQUIPMENT B.V.

Ref: P242068, B242352 Quote:

Order: 2011280786 Item: 001000

KANON LOADING EQUIPMENT

www.kanon.nl

Electromach B.V.
Jan Tinbergenstraat 193
7559 SP Hengelo
The Netherlands
US

Circuit diagram
safety digital outputs

Int. Revision :	P242068A91
Drawing No.:	+JOCC-DCB2
2011280786-001000-24	Scale: 1 mm : 1 mm / A3
Refer to protection notice ISO 16016	Sheet: 167

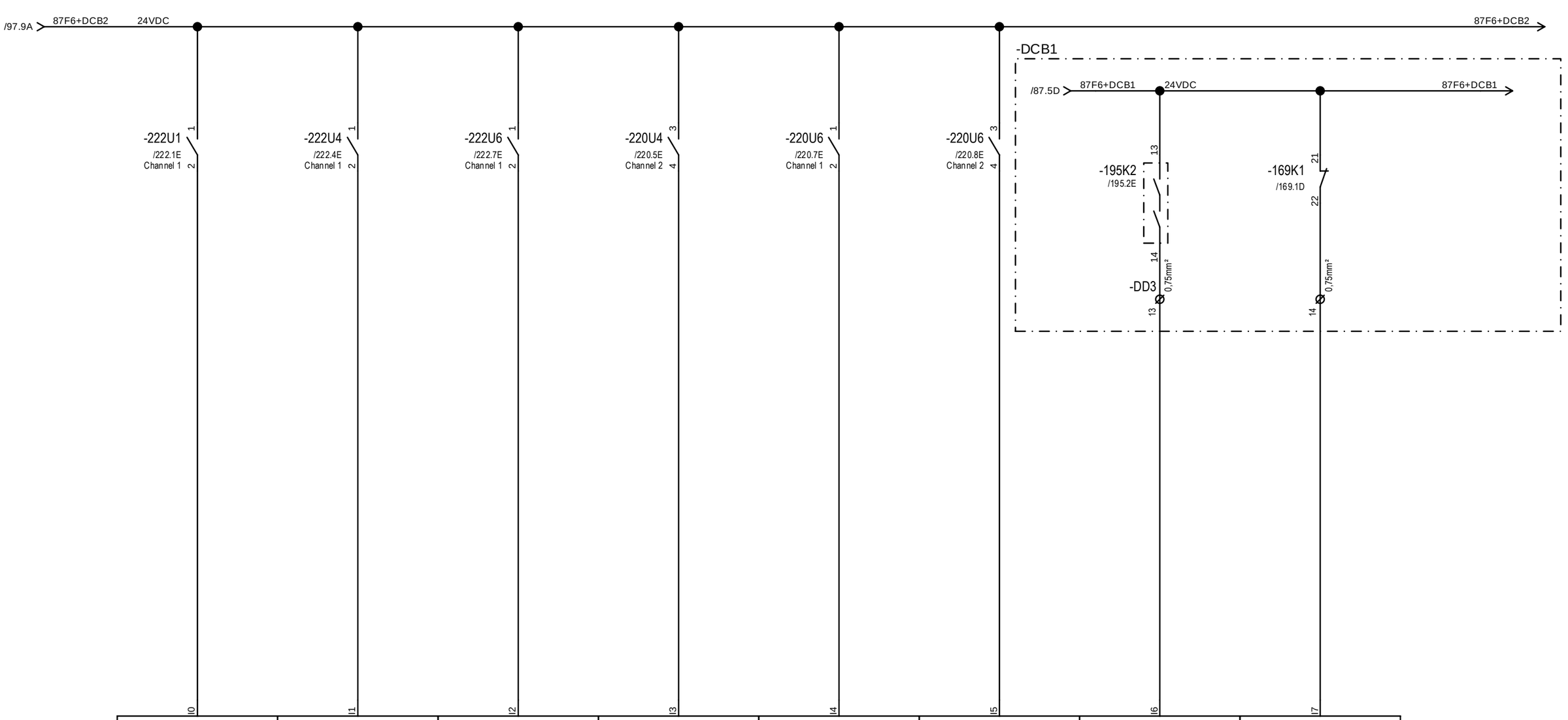

-97U2 772142 Chassis : 3 Slot : 5	I0	I1	I2	I3	I4	I5	I6	I7
	DI_2_APX_1ST_ALM MLA-B Apex 1st stage alarm	DI_2_APX_2ND_ALM1 MLA-B Apex 2nd stage alarm 1	DI_2_APX_2ND_ALM2 MLA-B Apex 2nd stage alarm 2	DI_2_ERS_VALVE_CLS1 MLA-B Upper ERS valve closed 1	DI_2_ERS_VALVE_CLS2 MLA-B Upper ERS valve closed 2	DI_2_ERS_VALVE_CLS3 MLA-B Upper ERS valve closed 3	DI_2_COM_FUSE MLA-B Common fuse alarm	DI_2_FB_SR_Y7.1-2 MLA-B Feedback safety relay Y7.1-2
	/97.2B	/97.2B	/97.2B	/97.2B	/97.2B	/97.2B	/97.2B	/97.2B

Index	Revision	Date	name			
2	Final as built	19-3-2025	M.Besseling	Drawn:	31-10-2024	elshofjo
1	For approval	13-11-2024	besselingmi	Engineer:	19-9-2024	besselingmi
				Approved:		
				Changed:		

KANON LOADING EQUIPMENT B.V.

Ref: P242068, B242352 Quote:
Order: 2011280786 Item: 001000

KANON LOADING EQUIPMENT
www.kanon.nl

Electromach B.V.
Jan Tinbergenstraat 193
7559 SP Hengelo
The Netherlands
US

Circuit diagram
safety digital inputs

Int. Revision :	P242068A91
Drawing No.:	+JOCC-DCB2
2011280786-001000-24	Scale: 1 mm : 1 mm / A3
Refer to protection notice ISO 16016	Sheet: 168

/97.2B	/97.2B	/97.2B	/97.2B
-97U2 772142 Chassis : 3 Slot : 5			
DO_2_SOL_Y7_ERC MLA-B ERC solenoid Y7.1 / Y7.2	DO_2_SOL_Y8_FRW MLA-B freewheel solenoid Y8	DO_2_SOL_Y13_BV MLA-B ERC ball valve open	DO_2_SOL_Y14_BV MLA-B ERC ball valve close

O0 O1 O2 O3

-DCB1

-DD3

15 0,75mm² 16 0,75mm² 17 0,75mm² 18 0,75mm²

-169K1 DC 24V A1 M A2

-169K2 DC 24V A1 TP1 A2

-169K3 DC 24V A1 M A2

-169K4 DC 24V A1 M A2

/87.6D 87F6-DCB1 87F6-DCB1

13 14 /195.1B
21 22 /168.8B

L LO /195.3B
NI N /195.3B

13 14 /195.7B
21 22

13 14 /195.8B
21 22

Index	Revision	Date	name				KANON LOADING EQUIPMENT B.V.			Electromach B.V. Jan Tinbergenstraat 193 7559 SP Hengelo The Netherlands	Circuit diagram safety digital outputs	Int. Revision :	P242068A91
2	Final as built	19-3-2025	M.Besseling	Drawn:	31-10-2024	elshofjo						Drawing No.:	+JOCC-DCB2
1	For approval	13-11-2024	besselingmi	Engineer:	19-9-2024	besselingmi						2011280786-001000-24	Scale: 1 mm : 1 mm / A3
				Approved:			Ref: P242068, B242352	Quote:		www.kanon.nl		Refer to protection notice ISO 16016	Sheet: 169
				Changed:			Order: 2011280786	Item: 001000					

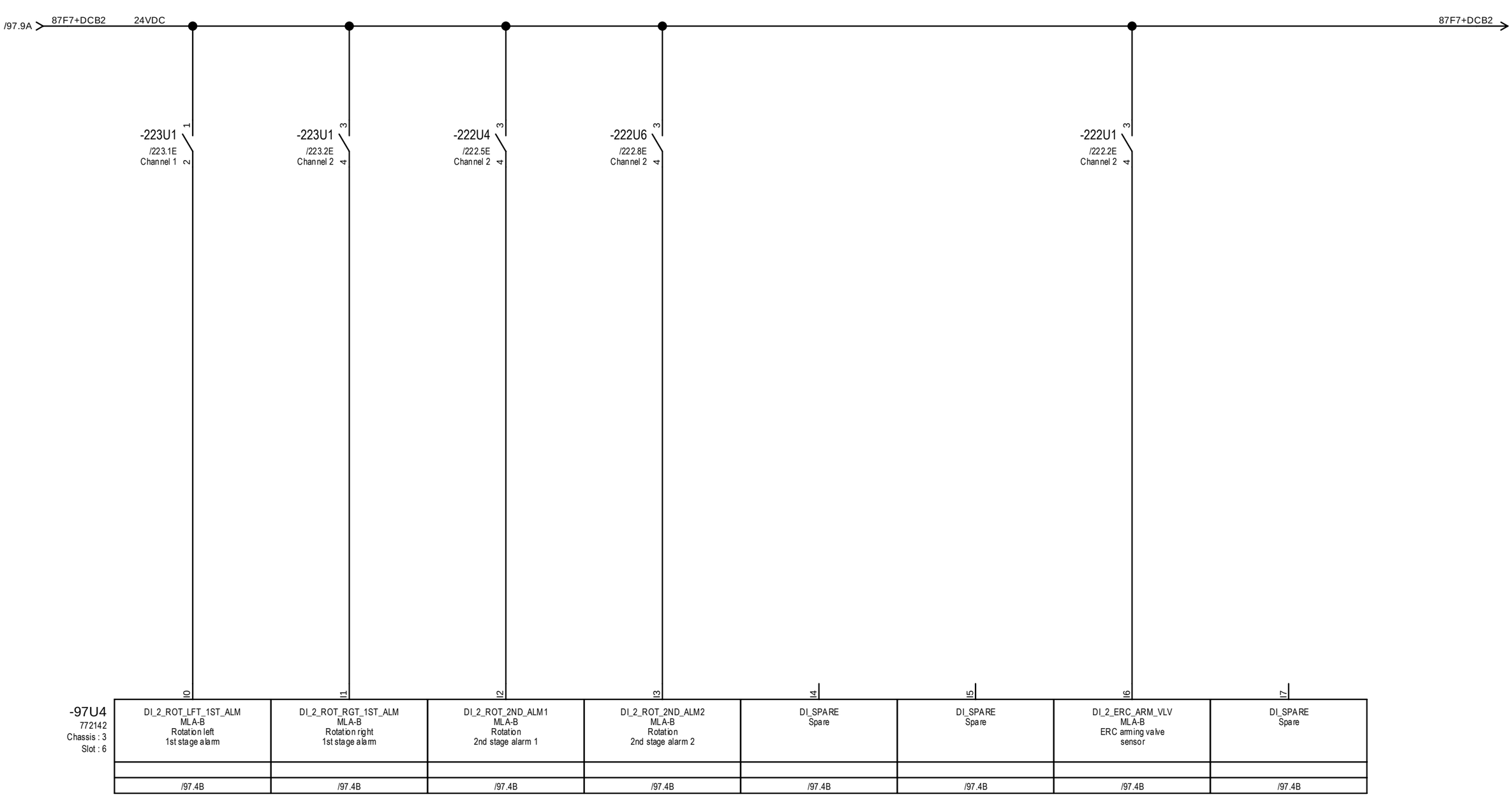

-97U4
772142
Chassis : 3
Slot : 6

I0	I1	I2	I3	I4	I5	I6	I7
DI_2_ROT_LFT_1ST_ALM MLA-B Rotation left 1st stage alarm	DI_2_ROT_RGT_1ST_ALM MLA-B Rotation right 1st stage alarm	DI_2_ROT_2ND_ALM1 MLA-B Rotation 2nd stage alarm 1	DI_2_ROT_2ND_ALM2 MLA-B Rotation 2nd stage alarm 2	DI_SPARE Spare	DI_SPARE Spare	DI_2_ERC_ARM_VLV MLA-B ERC arming valve sensor	DI_SPARE Spare
/97.4B	/97.4B	/97.4B	/97.4B	/97.4B	/97.4B	/97.4B	/97.4B

Index	Revision	Date	name
2	Final as built	19-3-2025	M.Besseling
1	For approval	13-11-2024	besselingmi

Drawn:	31-10-2024	elshofjo	
Engineer:	19-9-2024	besselingmi	
Approved:			
Changed:			

KANON LOADING EQUIPMENT B.V.

Ref: P242068, B242352 Quote:
Order: 2011280786 Item: 001000

KANON LOADING EQUIPMENT
www.kanon.nl

Electromach B.V.
Jan Tinbergenstraat 193
7559 SP Hengelo
The Netherlands
US

Circuit diagram
safety digital inputs

Int. Revision :	P242068A91
Drawing No.:	+JOCC-DCB2
2011280786-001000-24	Scale: 1 mm : 1 mm / A3
Refer to protection notice ISO 16016	Sheet: 170

/97.4B	/97.4B	/97.4B	/97.4B
DO_SPARE Spare	DO_SPARE Spare	DO_SPARE Spare	DO_SPARE Spare
00	01	02	03

-97U4
772142
Chassis : 3
Slot : 6

Index	Revision	Date	name			
2	Final as built	19-3-2025	M.Besseling	Drawn:	31-10-2024	elshofjo
1	For approval	13-11-2024	besselingmi	Engineer:	19-9-2024	besselingmi
				Approved:		
				Changed:		

KANON LOADING EQUIPMENT B.V.

Ref: P242068, B242352 Quote:
Order: 2011280786 Item: 001000

KANON LOADING EQUIPMENT
www.kanon.nl

Electromach B.V.
Jan Tinbergenstraat 193
7559 SP Hengelo
The Netherlands

Circuit diagram
safety digital outputs

Int. Revision :	P242068A91
Drawing No.:	+JOCC-DCB2
2011280786-001000-24	Scale: 1 mm : 1 mm / A3
Refer to protection notice ISO 16016	Sheet: 171

/97.9B 87F8+DCB2 24VDC

87F8+DCB2

-225U1 /225.1E Channel 1	-225U1 /225.2E Channel 2	-225U4 /225.4E Channel 1	-225U4 /225.5E Channel 2	-225U6 /225.7E Channel 1	-225U6 /225.8E Channel 2	-223U4 /223.4E Channel 1	
1 / 2	3 / 4	1 / 2	3 / 4	1 / 2	3 / 4	1 / 2	
I0	I1	I2	I3	I4	I5	I6	I7

-97U5
772142
Chassis : 3
Slot : 7

I0	I1	I2	I3	I4	I5	I6	I7
DI_2_FB_Y7.1 MLA-B Feedback solenoid Y7.1	DI_2_FB_Y7.2 MLA-B Feedback solenoid Y7.2	DI_2_FB_Y8.1 MLA-B Feedback solenoid Y8.1	DI_2_FB_Y8.2 MLA-B Feedback solenoid Y8.2	DI_2_FB_Y13 MLA-B Feedback solenoid Y13	DI_2_FB_Y14 MLA-B Feedback solenoid Y14	DI_2_ERC_PIN MLA-B ERC working pin in position	DI_SPARE Spare
/97.5B	/97.5B	/97.5B	/97.5B	/97.5B	/97.5B	/97.5B	/97.5B

Index	Revision	Date	name					
2	Final as built	19-3-2025	M.Besseling	Drawn:	31-10-2024	elshofjo		
1	For approval	13-11-2024	besselingmi	Engineer:	19-9-2024	besselingmi		
				Approved:				
				Changed:				

KANON LOADING EQUIPMENT B.V.

Ref: P242068, B242352 Quote:
Order: 2011280786 Item: 001000

KANON LOADING EQUIPMENT
www.kanon.nl

Electromach B.V.
Jan Tinbergenstraat 193
7559 SP Hengelo
The Netherlands
US

Circuit diagram
safety digital inputs

Int. Revision :	P242068A91
Drawing No.:	+JOCC-DCB2
2011280786-001000-24	Scale: 1 mm : 1 mm / A3
Refer to protection notice ISO 16016	Sheet: 172

/97.5B	/97.5B	/97.5B	/97.5B
DO_SPARE Spare	DO_SPARE Spare	DO_SPARE Spare	DO_SPARE Spare
00	01	02	03

-97U5
772142
Chassis : 3
Slot : 7

Index	Revision	Date	name			
2	Final as built	19-3-2025	M.Besseling	Drawn:	31-10-2024	elshofjo
1	For approval	13-11-2024	besselingmi	Engineer:	19-9-2024	besselingmi
				Approved:		
				Changed:		

KANON LOADING EQUIPMENT B.V.

Ref: P242068, B242352 Quote:
Order: 2011280786 Item: 001000

KANON LOADING EQUIPMENT
www.kanon.nl

Electromach B.V.
Jan Tinbergenstraat 193
7559 SP Hengelo
The Netherlands

Circuit diagram
safety digital outputs

Int. Revision :	P242068A91
Drawing No.:	+JOCC-DCB2
2011280786-001000-24	Scale: 1 mm : 1 mm / A3
Refer to protection notice ISO 16016	Sheet: 173

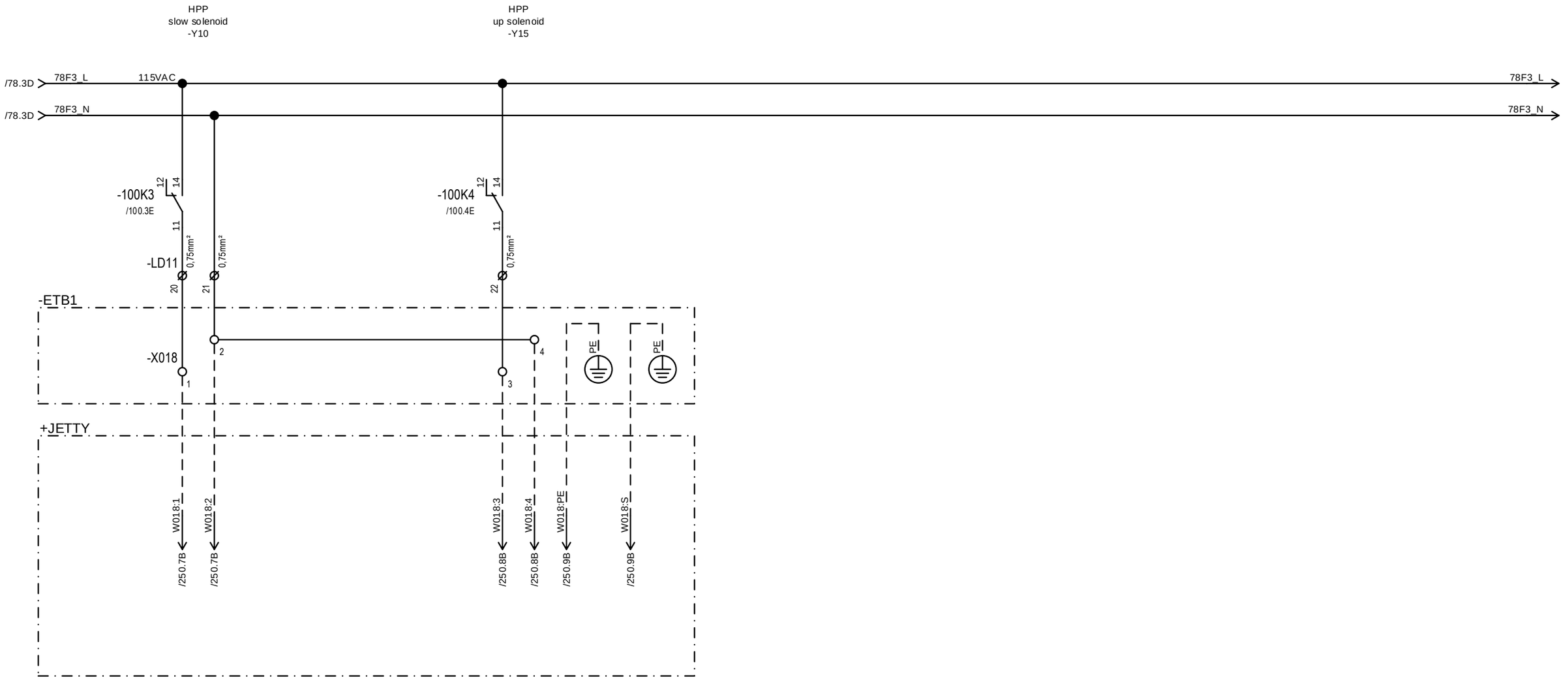

Index	Revision	Date	name								
2	Final as built	19-3-2025	M.Besseling	Drawn:	31-10-2024	elshofjo	**KANON LOADING EQUIPMENT B.V.**		**Electromach B.V.** Jan Tinbergenstraat 193 7559 SP Hengelo The Netherlands	Circuit diagram control HPP solenoids	Int. Revision : P242068A91
1	For approval	13-11-2024	besselingmi	Engineer:	19-9-2024	besselingmi					Drawing No.: +JOCC-DCB1
				Approved:			Ref: P242068, B242352	Quote:			2011280786-001000-24 Scale: 1 mm : 1 mm / A3
				Changed:			Order: 2011280786	Item: 001000	www.kanon.nl		Refer to protection notice ISO 16016 Sheet: 180

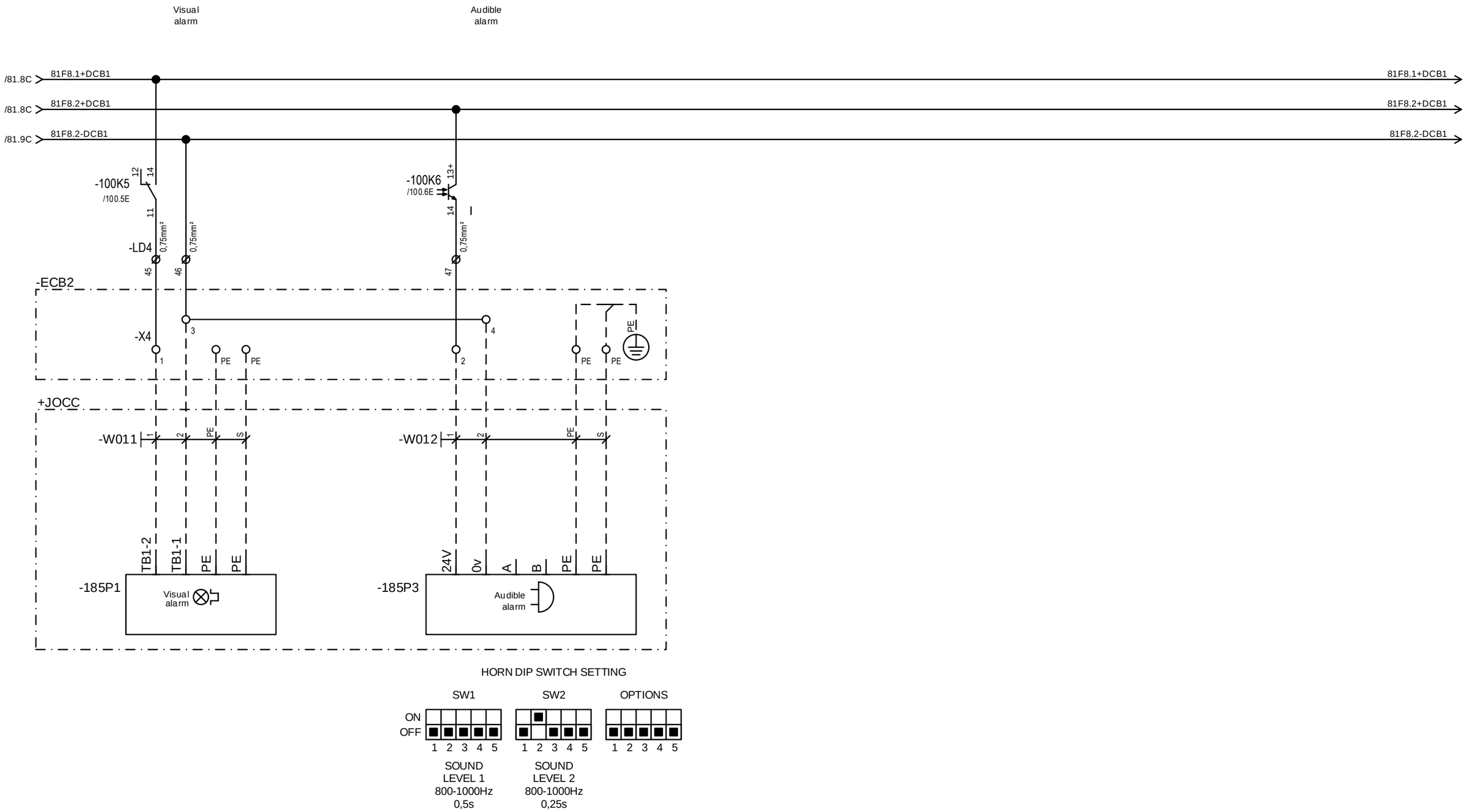

Index	Revision	Date	name			
2	Final as built	19-3-2025	M.Besseling	Drawn:	31-10-2024	elshofjo
1	For approval	13-11-2024	besselingmi	Engineer:	19-9-2024	besselingmi
				Approved:		
				Changed:		

KANON LOADING EQUIPMENT B.V.

Ref: P242068, B242352 Quote:

Order: 2011280786 Item: 001000

KANON LOADING EQUIPMENT

www.kanon.nl

Electromach B.V.
Jan Tinbergenstraat 193
7559 SP Hengelo
The Netherlands

Circuit diagram
control alarm devices

Int. Revision : P242068A91

Drawing No.: +JOCC-DCB1

2011280786-001000-24

Scale: 1 mm : 1 mm / A3

Refer to protection notice ISO 16016

Sheet: 185

MLA-A
ERC solenoid
Y7.1 / Y7.2

MLA-A
Common fuse
alarm

MLA-A
freewheel solenoid
Y8

MLA-A
manoeuvring
Y9.1 Y9.2 Y9.3

MLA-A
ERC ball valve
open

MLA-A
ERC ball valve
close

/91.9A 78F1_L 115VAC

78F1_L

-190F1
T 4A 1,5kA

-163K1
/163.1D

-163K2
/163.2D

-107K3
/107.3E

-190F4
T 2A

-190F5
T 2A

-190F6
T 2A

-190F7
T 2A

-163K3
/163.3D

-190F8
T 2A

-163K4
/163.4D

-LD11 0,75mm²

-ETB1

-XLA1

+JETTY

W101:9 /11.3.1A
W101:10 /11.3.1A
W101:11 /11.3.1A
W101:23 /11.3.9A
W101:12 /11.3.1A
W101:24 /11.3.9A
W101:13 /11.3.1A
W101:14 /11.3.2A
W101:15 /11.3.2A
W101:16 /11.3.2A
W101:17 /11.3.2A
W101:PE /11.3.9A
W101:S /11.3.9A

PE

-190K2
/162.7B
A1 24V
K1 13 93 31
K2 14 94 32
AC/DC 24...230V
A2 GND

/112.9F 78F1_N

78F1_N

2	Final as built	19-3-2025	M.Besseling	Drawn:	31-10-2024	elshofjo	KANON LOADING EQUIPMENT B.V.		Electromach B.V. Jan Tinbergenstraat 193 7559 SP Hengelo The Netherlands	Circuit diagram solenoid valves +MLA-A	Int. Revision : P242068A91
1	For approval	13-11-2024	besselingmi	Engineer:	19-9-2024	besselingmi					Drawing No.: +JOCC-DCB1
				Approved:			Ref: P242068, B242352	Quote:			2011280786-001000-24
Index	Revision	Date	name	Changed:			Order: 2011280786	Item: 001000	www.kanon.nl		Scale: 1 mm : 1 mm / A3
											Refer to protection notice ISO 16016 Sheet: 190

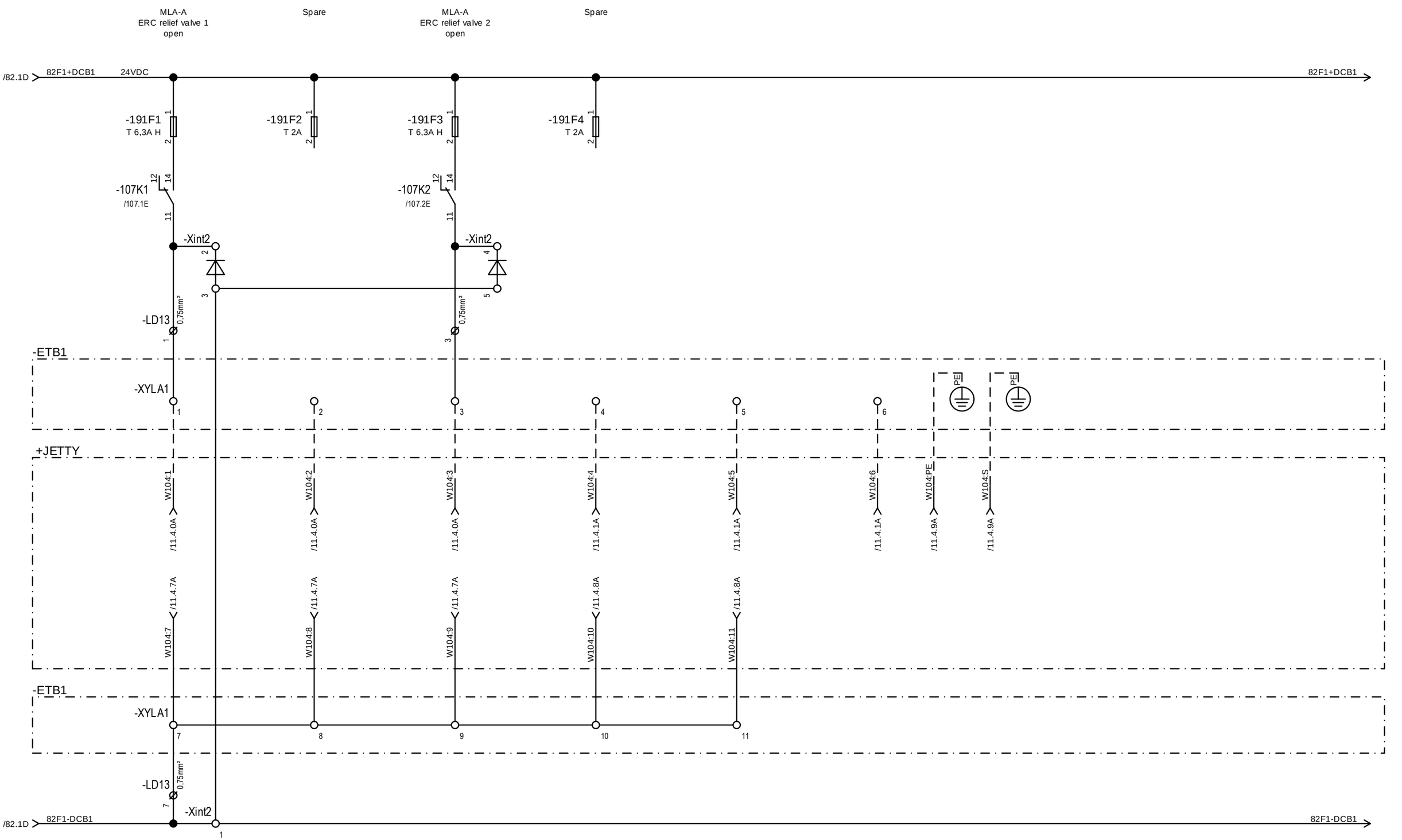

Index	Revision	Date	name								
2	Final as built	19-3-2025	M.Besseling	Drawn:	31-10-2024	elshofjo	**KANON LOADING EQUIPMENT B.V.**		KANON LOADING EQUIPMENT www.kanon.nl	**Electromach B.V.** Jan Tinbergenstraat 193 7559 SP Hengelo The Netherlands	Circuit diagram solenoid valves +MLA-A	Int. Revision :	P242068A91
1	For approval	13-11-2024	besselingmi	Engineer:	19-9-2024	besselingmi						Drawing No.:	+JOCC-DCB1
				Approved:			Ref: P242068, B242352	Quote:				2011280786-001000-24	Scale: 1 mm : 1 mm / A3
				Changed:			Order: 2011280786	Item: 001000				Refer to protection notice ISO 16016	Sheet: 191

MLA-B
ERC solenoid
Y7.1 / Y7.2

MLA-B
Common fuse
alarm

MLA-B
freewheel solenoid
Y8

MLA-B
manoeuvring
Y9.1 Y9.2 Y9.3

MLA-B
ERC ball valve
open

MLA-B
ERC ball valve
close

/91.9A 78F2_L 115VAC

78F2_L

-195F1
T 4A 1,5kA

-195F7
T 2A

-195F8
T 2A

-169K1
/169.1D

-169K2
/169.2D

-111K3
/111.3E

-169K3
/169.3D

-169K4
/169.4D

-195F4
T 2A

-195F5
T 2A

-195F6
T 2A

-LD12 0,75mm²

-ETB1

-XLA2

+JETTY

W201:9 /12.3.1A
W201:10 /12.3.1A
W201:11 /12.3.1A
W201:23 /12.3.9A
W201:12 /12.3.1A
W201:24 /12.3.9A
W201:13 /12.3.1A
W201:14 /12.3.2A
W201:15 /12.3.2A
W201:16 /12.3.2A
W201:17 /12.3.2A
W201:PE /12.3.9A
W201:S /12.3.9A

PE

-195K2
/168.7B
A1 24V
K1 13 93 31
K2 14 94 32
AC/DC 24...230V
A2 GND

/114.9F 78F2_N

78F2_N

2	Final as built	19-3-2025	M.Besseling	Drawn:	31-10-2024	elshofjo	KANON LOADING EQUIPMENT B.V.		Electromach B.V. Jan Tinbergenstraat 193 7559 SP Hengelo The Netherlands	Circuit diagram solenoid valves +MLA-B	Int. Revision :	P242068A91
1	For approval	13-11-2024	besselingmi	Engineer:	19-9-2024	besselingmi					Drawing No.:	+JOCC-DCB1
				Approved:			Ref: P242068, B242352	Quote:			2011280786-001000-24	Scale: 1 mm : 1 mm / A3
Index	Revision	Date	name	Changed:			Order: 2011280786	Item: 001000	www.kanon.nl		Refer to protection notice ISO 16016	Sheet: 195

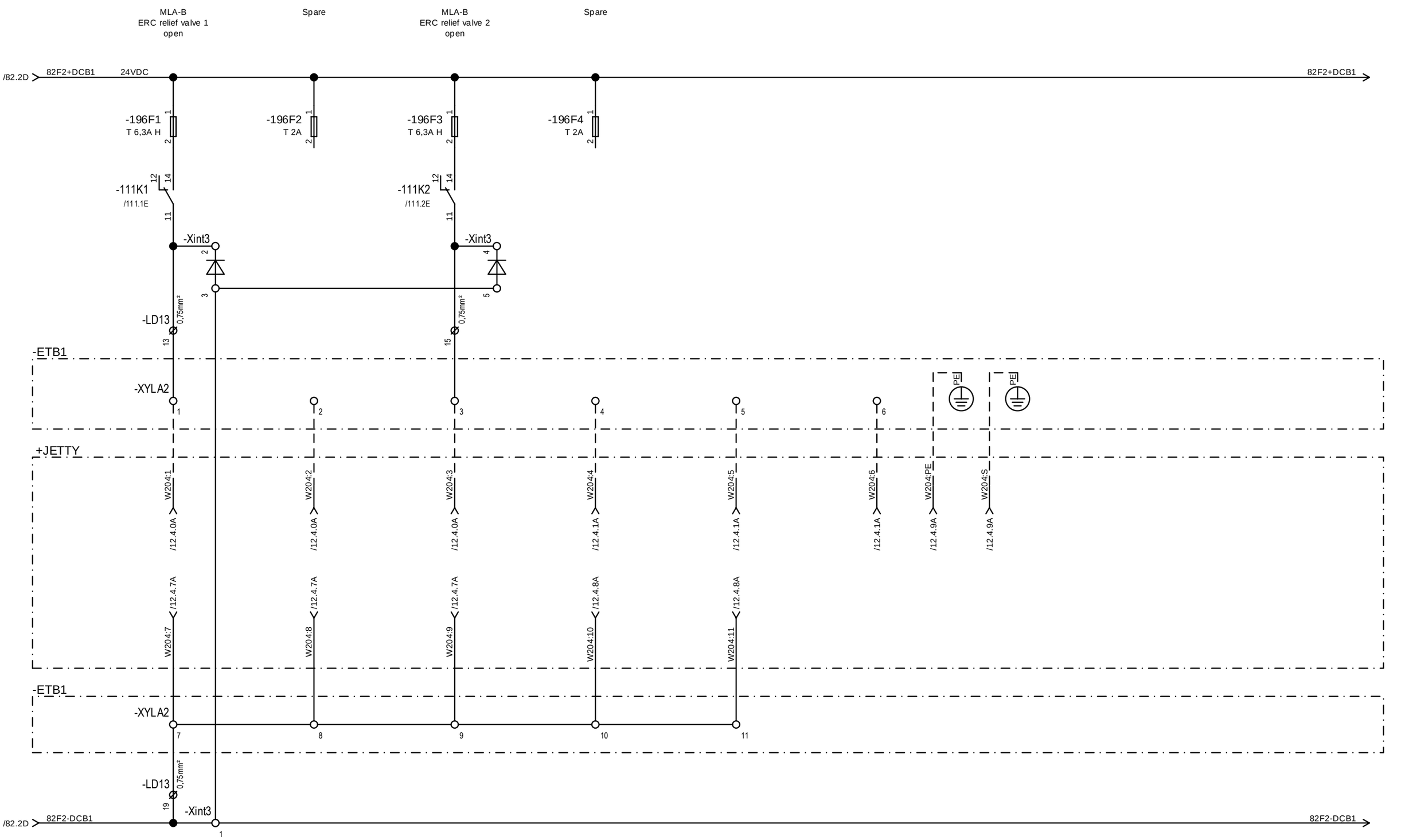

Index	Revision	Date	name								
2	Final as built	19-3-2025	M.Besseling	Drawn:	31-10-2024	elshofjo	**KANON LOADING EQUIPMENT B.V.**		KANON LOADING EQUIPMENT www.kanon.nl	**Electromach B.V.** Jan Tinbergenstraat 193 7559 SP Hengelo The Netherlands	Circuit diagram solenoid valves +MLA-B	Int. Revision :	P242068A91
1	For approval	13-11-2024	besselingmi	Engineer:	19-9-2024	besselingmi						Drawing No.:	+JOCC-DCB1
				Approved:			Ref: P242068, B242352	Quote:				2011280786-001000-24	Scale: 1 mm : 1 mm / A3
				Changed:			Order: 2011280786	Item: 001000				Refer to protection notice ISO 16016	Sheet: 196

Low oil
level switch

Low oil
pressure switch accu 1

Low oil
pressure switch accu 2

-Y15
feedback

+JETTY

W015:1 /251.1D
W015:2 /251.1D
W015:3 /251.2D
W015:4 /251.2D
W015:5 /251.3D
W015:6 /251.3D
W015:7 /251.4D
W015:8 /251.4D
W015:S /251.5D

-ETB2

-Xi15
1 2 3 4

-LD24
1 2 3 4
0,75mm² 0,75mm² 0,75mm² 0,75mm²

10+ 11- 12+ 13-

-200U1
9270/21-17-14s

I / II
Direction1
LF1
Direction2
LF2
24V DC

Exi
Channel 1

Exi
Channel 2

7 9

1 2 /134.5B
3 4 /134.6B

-Xi15
5 6 7 8

-LD24
5 6 7 8
0,75mm² 0,75mm² 0,75mm² 0,75mm²

10+ 11- 12+ 13-

-200U4
9270/21-17-14s

I / II
Direction1
LF1
Direction2
LF2
24V DC

Exi
Channel 1

Exi
Channel 2

7 9

1 2 /134.7B
3 4 /134.8B

TE

Index	Revision	Date	name			
3	Final as built	19-3-2025	M.Besseling	Drawn:	31-10-2024	elshofjo
2	Final for production	22-11-2024	besselingmi	Engineer:	19-9-2024	besselingmi
1	For approval	13-11-2024	besselingmi	Approved:		
				Changed:		

KANON LOADING EQUIPMENT B.V.

Ref: P242068, B242352 Quote:
Order: 2011280786 Item: 001000

KANON LOADING EQUIPMENT
www.kanon.nl

Electromach B.V.
Jan Tinbergenstraat 193
7559 SP Hengelo
The Netherlands
US

Circuit diagram
IS isolators +HPP

Int. Revision :	P242068A91
Drawing No.:	+JOCC-DCB2
2011280786-001000-24	Scale: 1 mm : 1 mm / A3
Refer to protection notice ISO 16016	Sheet: 200

HPP pendant up

HPP pendant down

HPP pendant shore

HPP pendant ship

HPP pendant right

HPP pendant left

+JETTY

-ETB2

W014:1 /254.0E

W014:2 /254.1E

W014:3 /254.1E

W014:4 /254.2E

W014:5 /254.2E

W014:6 /254.3E

W014:7 /254.3E

W014:8 /254.4E

W014:9 /254.4E

-Xi14 1 2 3

-Xi14 4 5 6

-Xi14 7 8 9

-LD24 21 22 23 0,75mm²

-LD24 24 25 26 0,75mm²

-LD24 27 28 29 0,75mm²

-205U1
9270/21-17-14s

-205U4
9270/21-17-14s

-205U6
9270/21-17-14s

I / II
Direction1
LF1
Direction2
LF2
24V DC
10+ 11- 12+ 13-
Exi Channel 1
Exi Channel 2
7 9

1 2 /138.1B

3 4 /138.2B

1 2 /138.3B

3 4 /138.4B

1 2 /138.5B

3 4 /138.6B

Index	Revision	Date	name				
3	Final as built	19-3-2025	M.Besseling	Drawn:	31-10-2024	elshofjo	
2	Final for production	22-11-2024	besselingmi	Engineer:	19-9-2024	besselingmi	
1	For approval	13-11-2024	besselingmi	Approved:			
				Changed:			

KANON LOADING EQUIPMENT B.V.

Ref: P242068, B242352 Quote:

Order: 2011280786 Item: 001000

KANON LOADING EQUIPMENT
www.kanon.nl

Electromach B.V.
Jan Tinbergenstraat 193
7559 SP Hengelo
The Netherlands
US

Circuit diagram
IS isolators pendant

Int. Revision :	P242068A91
Drawing No.:	+JOCC-DCB2
2011280786-001000-24	Scale: 1 mm : 1 mm / A3
Refer to protection notice ISO 16016	Sheet: 205

HPP
pendant
coupler open

HPP
pendant
coupler close

HPP
pendant
upper ERS valve open

HPP
pendant
upper ERS valve close

HPP
pendant
slow

HPP
pendant
freewheel

+JETTY

-ETB2

-Xi14

-LD24

W014:10 /254.5E
W014:11 /254.5E
W014:12 /254.6E
W014:13 /254.6E
W014:14 /254.7E
W014:15 /254.7E
W014:16 /254.8E
W014:17 /254.8E
W014:18 /254.9E
W014:S /254.9E

10 11 12 13 14 15 16 17 18 TE

30 31 32 33 34 35 36 37 38

0,75mm² 0,75mm² 0,75mm²

10+ 11- 12+ 13-

-206U1
9270/21-17-14s

-206U4
9270/21-17-14s

-206U6
9270/21-17-14s

I / II
Direction1
LF1
Direction2
LF2
24V DC

Exi
Channel 1

Exi
Channel 2

7 9

1 2 /138.7B
3 4 /138.8B
1 2 /139.1B
3 4 /139.2B
1 2 /139.3B
3 4 /139.4B

Index	Revision	Date	name
3	Final as built	19-3-2025	M.Besseling
2	Final for production	22-11-2024	besselingmi
1	For approval	13-11-2024	besselingmi

Drawn:	31-10-2024	elshofjo	
Engineer:	19-9-2024	besselingmi	
Approved:			
Changed:			

KANON LOADING EQUIPMENT B.V.

Ref: P242068, B242352 Quote:
Order: 2011280786 Item: 001000

KANON LOADING EQUIPMENT
www.kanon.nl

Electromach B.V.
Jan Tinbergenstraat 193
7559 SP Hengelo
The Netherlands
US

Circuit diagram
IS isolators pendant

Int. Revision :	P242068A91
Drawing No.:	+JOCC-DCB2
2011280786-001000-24	Scale: 1 mm : 1 mm / A3
Refer to protection notice ISO 16016	Sheet: 206

MLA-A
Vessel
connected

MLA-A
ERC Sensor
product

MLA-A
Upper ERS valve
opened

MLA-A
Upper ERS valve
closed 1

MLA-A
Upper ERS valve
closed 2

MLA-A
Upper ERS valve
closed 3

+JETTY

W102-2:1 /11.1.4E
W102-2:2 /11.1.4E
W102-2:3 /11.1.4E
W102-2:4 /11.1.5E
W102-2:7 /11.1.5E
W102-2:8 /11.1.5E
W102-2:9 /11.1.6E
W102-2:10 /11.1.6E
W102-2:11 /11.1.6E
W102-2:12 /11.1.6E
W102-2:13 /11.1.6E
W102-2:14 /11.1.7E

-ETB2

-XiLA1 19 20 21 22 25 26 27 28 29 30 31 32

-LD21 1 2 3 4 5 6 7 8 9 10 11 12 0,75mm² 0,75mm²

10+ 11- 12+ 13-

-210U1
9270/21-17-14s

-210U4
9270/21-17-14s

-210U6
9270/21-17-14s

I / II
Direction1
LF1
Direction2
LF2
24V DC
Exi
Channel 1
Exi
Channel 2
7 9

1 2 /140.1B
3 4 /140.2B
1 2 /140.4B
3 4 /162.4B
1 2 /162.5B
3 4 /162.6B

Index	Revision	Date	name				
3	Final as built	19-3-2025	M.Besseling	Drawn:	31-10-2024	elshofjo	
2	Final for production	22-11-2024	besselingmi	Engineer:	19-9-2024	besselingmi	
1	For approval	13-11-2024	besselingmi	Approved:			
				Changed:			

KANON LOADING EQUIPMENT B.V.

Ref: P242068, B242352 Quote:
Order: 2011280786 Item: 001000

KANON LOADING EQUIPMENT
www.kanon.nl

Electromach B.V.
Jan Tinbergenstraat 193
7559 SP Hengelo
The Netherlands
US

Circuit diagram
IS isolators +MLA-A

Int. Revision :	P242068A91
Drawing No.:	+JOCC-DCB2
2011280786-001000-24	Scale: 1 mm : 1 mm / A3
Refer to protection notice ISO 16016	Sheet: 210

Spare

Spare

Spare

Spare

MLA-A
Parking
lock

+JETTY

/11.1.7E /11.1.7E /11.1.7E /11.1.7E /11.1.8E /11.1.8E /11.1.8E /11.1.8E /11.2.1E /11.2.1E

W102-2:15 W102-2:16 W102-2:17 W102-2:18 W102-2:19 W102-2:20 W102-2:21 W102-2:22 W102-3:3 W102-3:4

-ETB2

-XiLA1 -XiLA1 -XiLA1 -XiLA1 -XiLA1

33 34 35 36 37 38 39 40 47 48

0,75mm² 0,75mm² 0,75mm² 0,75mm² 0,75mm² 0,75mm² 0,75mm² 0,75mm² 0,75mm² 0,75mm²

-LD21 -LD21 -LD21

13 14 15 16 17 18 19 20 21 22

10+ 11- 12+ 13- 10+ 11- 12+ 13- 10+ 11- 12+ 13-

-211U1
9270/21-17-14s

-211U4
9270/21-17-14s

-211U6
9270/21-17-14s

I / II
Direction1
LF1
Direction2
LF2
24V DC
7 9

Exi
Channel 1

Exi
Channel 2

1 2 /141.1B 3 4 /141.2B

1 2 /141.3B 3 4 /141.4B

1 2 /141.6B 3 4

Index	Revision	Date	name								
3	Final as built	19-3-2025	M.Besseling	Drawn:	31-10-2024	elshofjo	KANON LOADING EQUIPMENT B.V.		KANON LOADING EQUIPMENT www.kanon.nl	Electromach B.V. Jan Tinbergenstraat 193 7559 SP Hengelo The Netherlands	Circuit diagram IS isolators +MLA-A
2	Final for production	22-11-2024	besselingmi	Engineer:	19-9-2024	besselingmi					
1	For approval	13-11-2024	besselingmi	Approved:			Ref: P242068, B242352	Quote:			
				Changed:			Order: 2011280786	Item: 001000			

Int. Revision :	P242068A91
Drawing No.:	+JOCC-DCB2
2011280786-001000-24	Scale: 1 mm : 1 mm / A3
Refer to protection notice ISO 16016	Sheet: 211

MLA-A
Apex
1st stage alarm

MLA-A
ERC arming valve
sensor

MLA-A
Apex
2nd stage alarm 1

MLA-A
Rotation
2nd stage alarm 1

MLA-A
Apex
2nd stage alarm 2

MLA-A
Rotation
2nd stage alarm 2

+JETTY

W102-1:1 /11.1.0E
W102-1:2 /11.1.1E
W102-3:1 /11.2.0E
W102-3:2 /11.2.0E
W102-1:3 /11.1.1E
W102-1:4 /11.1.1E
W102-1:13 /11.1.3E
W102-1:14 /11.1.3E
W102-1:5 /11.1.1E
W102-1:6 /11.1.1E
W102-1:15 /11.1.3E
W102-1:16 /11.1.3E

-ETB2

-XiLA1 1 2 45 46
-LD21 23 24 25 26 0,75mm² 10+ 11- 12+ 13-

-XiLA1 3 4 13 14
-LD21 27 28 29 30 0,75mm² 10+ 11- 12+ 13-

-XiLA1 5 6 15 16
-LD21 31 32 33 34 0,75mm² 10+ 11- 12+ 13-

-212U1
9270/21-17-14s
I / II
Direction1
LF1
Direction2
LF2
24V DC
Exi
Channel 1
Exi
Channel 2
7 9
1 2 /162.1B
3 4 /164.7B

-212U4
9270/21-17-14s
I / II
Direction1
LF1
Direction2
LF2
24V DC
Exi
Channel 1
Exi
Channel 2
7 9
1 2 /162.2B
3 4 /164.3B

-212U6
9270/21-17-14s
I / II
Direction1
LF1
Direction2
LF2
24V DC
Exi
Channel 1
Exi
Channel 2
7 9
1 2 /162.3B
3 4 /164.4B

Index	Revision	Date	name				
2	Final as built	19-3-2025	M.Besseling	Drawn:	31-10-2024	elshofjo	
1	For approval	13-11-2024	besselingmi	Engineer:	19-9-2024	besselingmi	
				Approved:			
				Changed:			

KANON LOADING EQUIPMENT B.V.

Ref: P242068, B242352 Quote:
Order: 2011280786 Item: 001000

KANON LOADING EQUIPMENT
www.kanon.nl

Electromach B.V.
Jan Tinbergenstraat 193
7559 SP Hengelo
The Netherlands
US

Circuit diagram
IS isolators +MLA-A

Int. Revision :	P242068A91
Drawing No.:	+JOCC-DCB2
2011280786-001000-24	Scale: 1 mm : 1 mm / A3
Refer to protection notice ISO 16016	Sheet: 212

MLA-A
Rotation left
1st stage alarm

MLA-A
Rotation right
1st stage alarm

MLA-A
ERC working pin
in position

+JETTY

W102-1:9 /11.1.2E
W102-1:10 /11.1.2E
W102-1:11 /11.1.2E
W102-1:12 /11.1.3E
W102-2:5 /11.1.5E
W102-2:6 /11.1.5E

-ETB2

-XiLA1 9 10 11 12
-XiLA1 23 24

-LD21 35 36 37 38 0,75mm²
-LD21 39 40 0,75mm²

-213U1
9270/21-17-14s
I / II
Direction1
LF1
Direction2
LF2
24V DC
Exi
Channel 1
Exi
Channel 2
10+ 11- 12+ 13-
7 9

-213U4
9270/21-17-14s
I / II
Direction1
LF1
Direction2
LF2
24V DC
Exi
Channel 1
Exi
Channel 2
10+ 11- 12+ 13-
7 9

1 2 /164.1B
3 4 /164.2B
1 2 /166.7B
3 4

Index	Revision	Date	name
2	Final as built	19-3-2025	M.Besseling
1	For approval	13-11-2024	besselingmi

Drawn:	31-10-2024	elshofjo	
Engineer:	19-9-2024	besselingmi	
Approved:			
Changed:			

KANON LOADING EQUIPMENT B.V.

Ref:	P242068, B242352	Quote:	
Order:	2011280786	Item:	001000

KANON LOADING EQUIPMENT
www.kanon.nl

Electromach B.V.
Jan Tinbergenstraat 193
7559 SP Hengelo
The Netherlands
US

Circuit diagram
IS isolators +MLA-A

Int. Revision :	P242068A91
Drawing No.:	+JOCC-DCB2
2011280786-001000-24	Scale: 1 mm : 1 mm / A3
Refer to protection notice ISO 16016	Sheet: 213

MLA-A Feedback solenoid Y7.1

MLA-A Feedback solenoid Y7.2

MLA-A Feedback solenoid Y8.1

MLA-A Feedback solenoid Y8.2

MLA-A Feedback solenoid Y13

MLA-A Feedback solenoid Y14

+JETTY

-ETB2

W103:1 /11.2.4E
W103:2 /11.2.4E
W103:3 /11.2.5E
W103:4 /11.2.5E
W103:5 /11.2.5E
W103:6 /11.2.5E
W103:7 /11.2.6E
W103:8 /11.2.6E
W103:9 /11.2.6E
W103:10 /11.2.7E
W103:11 /11.2.7E
W103:12 /11.2.7E

-XiYLA1 1 2 3 4

-XiYLA1 5 6 7 8

-XiYLA1 9 10 11 12

-LD23 1 2 3 4 0,75mm² 0,75mm² 0,75mm² 0,75mm²

-LD23 5 6 7 8 0,75mm² 0,75mm² 0,75mm² 0,75mm²

-LD23 9 10 11 12 0,75mm² 0,75mm² 0,75mm² 0,75mm²

-215U1
9270/21-17-14s

-215U4
9270/21-17-14s

-215U6
9270/21-17-14s

I / II
Direction1
LF1
Direction2
LF2
24V DC
10+ 11- 12+ 13-
7 9
Exi Channel 1
Exi Channel 2

1 2 /166.1B
3 4 /166.2B

1 2 /166.3B
3 4 /166.4B

1 2 /166.5B
3 4 /166.6B

Index	Revision	Date	name
2	Final as built	19-3-2025	M.Besseling
1	For approval	13-11-2024	besselingmi

Drawn:	31-10-2024	elshofjo	
Engineer:	19-9-2024	besselingmi	
Approved:			
Changed:			

KANON LOADING EQUIPMENT B.V.

Ref: P242068, B242352 Quote:
Order: 2011280786 Item: 001000

KANON LOADING EQUIPMENT
www.kanon.nl

Electromach B.V.
Jan Tinbergenstraat 193
7559 SP Hengelo
The Netherlands
US

Circuit diagram
IS isolators +MLA-A

Int. Revision :	P242068A91
Drawing No.:	+JOCC-DCB2
2011280786-001000-24	Scale: 1 mm : 1 mm / A3
Refer to protection notice ISO 16016	Sheet: 215

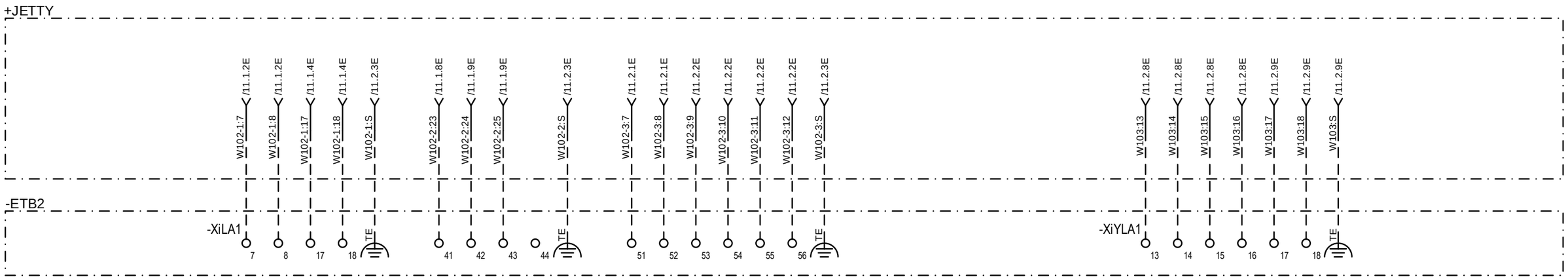

Index	Revision	Date	name						
2	Final as built	19-3-2025	M.Besseling	Drawn:	31-10-2024	elshofjo	KANON LOADING EQUIPMENT B.V.		
1	For approval	13-11-2024	besselingmi	Engineer:	19-9-2024	besselingmi			
				Approved:			Ref: P242068, B242352	Quote:	
				Changed:			Order: 2011280786	Item: 001000	

KANON LOADING EQUIPMENT
www.kanon.nl

Electromach B.V.
Jan Tinbergenstraat 193
7559 SP Hengelo
The Netherlands
US

Circuit diagram
IS isolators +MLA-A

Int. Revision :	P242068A91
Drawing No.:	+JOCC-DCB2
2011280786-001000-24	Scale: 1 mm : 1 mm / A3
Refer to protection notice ISO 16016	Sheet: 218

MLA-B
Vessel
connected

MLA-B
ERC Sensor
product

MLA-B
Upper ERS valve
opened

MLA-B
Upper ERS valve
closed 1

MLA-B
Upper ERS valve
closed 2

MLA-B
Upper ERS valve
closed 3

+JETTY

W202-2:1 /12.1.4E
W202-2:2 /12.1.4E
W202-2:3 /12.1.4E
W202-2:4 /12.1.5E
W202-2:7 /12.1.5E
W202-2:8 /12.1.5E
W202-2:9 /12.1.6E
W202-2:10 /12.1.6E
W202-2:11 /12.1.6E
W202-2:12 /12.1.6E
W202-2:13 /12.1.6E
W202-2:14 /12.1.7E

-ETB2

-XiLA2 19 20 21 22 25 26 27 28 29 30 31 32

-LD22 1 2 3 4 5 6 7 8 9 10 11 12 0,75mm² 0,75mm²

10+ 11- 12+ 13-

-220U1
9270/21-17-14s

-220U4
9270/21-17-14s

-220U6
9270/21-17-14s

I / II
Direction1
LF1
Direction2
LF2
24V DC
Exi
Channel 1
Exi
Channel 2
7 9

1 2 /143.1B
3 4 /143.2B
1 2 /143.4B
3 4 /168.4B
1 2 /168.5B
3 4 /168.6B

Index	Revision	Date	name				
3	Final as built	19-3-2025	M.Besseling	Drawn:	31-10-2024	elshofjo	
2	Final for production	22-11-2024	besselingmi	Engineer:	19-9-2024	besselingmi	
1	For approval	13-11-2024	besselingmi	Approved:			

KANON LOADING EQUIPMENT B.V.

Ref: P242068, B242352 Quote:
Order: 2011280786 Item: 001000

KANON LOADING EQUIPMENT
www.kanon.nl

Electromach B.V.
Jan Tinbergenstraat 193
7559 SP Hengelo
The Netherlands
US

Circuit diagram
IS isolators +MLA-B

Int. Revision :	P242068A91
Drawing No.:	+JOCC-DCB2
2011280786-001000-24	Scale: 1 mm : 1 mm / A3
Refer to protection notice ISO 16016	Sheet: 220

Spare

Spare

Spare

Spare

MLA-B
Parking
lock

+JETTY

-ETB2

W202-2:15 /12.1.7E
W202-2:16 /12.1.7E
W202-2:17 /12.1.7E
W202-2:18 /12.1.7E
W202-2:19 /12.1.8E
W202-2:20 /12.1.8E
W202-2:21 /12.1.8E
W202-2:22 /12.1.8E
W202-3:3 /12.2.1E
W202-3:4 /12.2.1E

-XiLA2 33 34 35 36 37 38 39 40 47 48

0,75mm² 0,75mm² 0,75mm² 0,75mm² 0,75mm² 0,75mm² 0,75mm² 0,75mm² 0,75mm² 0,75mm²

-LD22 13 14 15 16 17 18 19 20 21 22

10+ 11- 12+ 13-

-221U1
9270/21-17-14s

-221U4
9270/21-17-14s

-221U6
9270/21-17-14s

I / II
Direction1
LF1
Direction2
LF2
24V DC

Exi
Channel 1

Exi
Channel 2

7 9

1 2 /144.1B 3 4 /144.2B

1 2 /144.3B 3 4 /144.4B

1 2 /144.6B 3 4

Index	Revision	Date	name				
3	Final as built	19-3-2025	M.Besseling	Drawn:	31-10-2024	elshofjo	
2	Final for production	22-11-2024	besselingmi	Engineer:	19-9-2024	besselingmi	
1	For approval	13-11-2024	besselingmi	Approved:			

KANON LOADING EQUIPMENT B.V.

Ref: P242068, B242352 Quote:
Order: 2011280786 Item: 001000

KANON LOADING EQUIPMENT
www.kanon.nl

Electromach B.V.
Jan Tinbergenstraat 193
7559 SP Hengelo
The Netherlands
US

Circuit diagram
IS isolators +MLA-B

Int. Revision :	P242068A91
Drawing No.:	+JOCC-DCB2
2011280786-001000-24	Scale: 1 mm : 1 mm / A3
Refer to protection notice ISO 16016	Sheet: 221

MLA-B
Apex
1st stage alarm

MLA-B
ERC arming valve
sensor

MLA-B
Apex
2nd stage alarm 1

MLA-B
Rotation
2nd stage alarm 1

MLA-B
Apex
2nd stage alarm 2

MLA-B
Rotation
2nd stage alarm 2

+JETTY

-ETB2

W202-1:1 /12.1.0E
W202-1:2 /12.1.1E
W202-3:1 /12.2.0E
W202-3:2 /12.2.0E
W202-1:3 /12.1.1E
W202-1:4 /12.1.1E
W202-1:13 /12.1.3E
W202-1:14 /12.1.3E
W202-1:5 /12.1.1E
W202-1:6 /12.1.1E
W202-1:15 /12.1.3E
W202-1:16 /12.1.3E

-XiLA2 1 2 45 46
-XiLA2 3 4 13 14
-XiLA2 5 6 15 16

-LD22 23 24 25 26 0,75mm² 0,75mm² 0,75mm² 0,75mm²
-LD22 27 28 29 30 0,75mm² 0,75mm² 0,75mm² 0,75mm²
-LD22 31 32 33 34 0,75mm² 0,75mm² 0,75mm² 0,75mm²

-222U1
9270/21-17-14s
-222U4
9270/21-17-14s
-222U6
9270/21-17-14s

I / II
Direction1
LF1
Direction2
LF2
24V DC
10+ 11- 12+ 13-
Exi Channel 1
Exi Channel 2
7 9

1 2 /168.1B
3 4 /170.7B
1 2 /168.2B
3 4 /170.3B
1 2 /168.3B
3 4 /170.4B

Index	Revision	Date	name
2	Final as built	19-3-2025	M.Besseling
1	For approval	13-11-2024	besselingmi

Drawn: 31-10-2024 elshofjo
Engineer: 19-9-2024 besselingmi
Approved:
Changed:

KANON LOADING EQUIPMENT B.V.

Ref: P242068, B242352 Quote:
Order: 2011280786 Item: 001000

KANON LOADING EQUIPMENT
www.kanon.nl

Electromach B.V.
Jan Tinbergenstraat 193
7559 SP Hengelo
The Netherlands
US

Circuit diagram
IS isolators +MLA-B

Int. Revision : P242068A91
Drawing No.: 2011280786-001000-24 +JOCC-DCB2
Scale: 1 mm : 1 mm / A3
Refer to protection notice ISO 16016 Sheet: 222

MLA-B
Rotation left
1st stage alarm

MLA-B
Rotation right
1st stage alarm

MLA-B
ERC working pin
in position

+JETTY

-ETB2

W202-1:9 /12.1.2E
W202-1:10 /12.1.2E
W202-1:11 /12.1.2E
W202-1:12 /12.1.3E
W202-2:5 /12.1.5E
W202-2:6 /12.1.5E

-XiLA2
9 10 11 12

-LD22
35 36 37 38
0,75mm² 0,75mm² 0,75mm² 0,75mm²

10+ 11- 12+ 13-

-223U1
9270/21-17-14s

I / II
Direction1
LF1
Direction2
LF2
24V DC

Exi
Channel 1

Exi
Channel 2

7 9

1 2 /170.1B

3 4 /170.2B

-XiLA2
23 24

-LD22
39 40
0,75mm² 0,75mm²

10+ 11- 12+ 13-

-223U4
9270/21-17-14s

I / II
Direction1
LF1
Direction2
LF2
24V DC

Exi
Channel 1

Exi
Channel 2

7 9

1 2 /172.7B

3 4

Index	Revision	Date	name					
2	Final as built	19-3-2025	M.Besseling	Drawn:	31-10-2024	elshofjo		
1	For approval	13-11-2024	besselingmi	Engineer:	19-9-2024	besselingmi		
				Approved:				
				Changed:				

KANON LOADING EQUIPMENT B.V.

Ref: P242068, B242352 Quote:
Order: 2011280786 Item: 001000

KANON LOADING EQUIPMENT
www.kanon.nl

Electromach B.V.
Jan Tinbergenstraat 193
7559 SP Hengelo
The Netherlands
US

Circuit diagram
IS isolators +MLA-B

Int. Revision :	P242068A91
Drawing No.:	+JOCC-DCB2
2011280786-001000-24	Scale: 1 mm : 1 mm / A3
Refer to protection notice ISO 16016	Sheet: 223

MLA-B Feedback solenoid Y7.1

MLA-B Feedback solenoid Y7.2

MLA-B Feedback solenoid Y8.1

MLA-B Feedback solenoid Y8.2

MLA-B Feedback solenoid Y13

MLA-B Feedback solenoid Y14

+JETTY

-ETB2

W203:1 /12.2.4E
W203:2 /12.2.4E
W203:3 /12.2.5E
W203:4 /12.2.5E
W203:5 /12.2.5E
W203:6 /12.2.5E
W203:7 /12.2.6E
W203:8 /12.2.6E
W203:9 /12.2.6E
W203:10 /12.2.7E
W203:11 /12.2.7E
W203:12 /12.2.7E

-XiYLA2 1 2 3 4

-XiYLA2 5 6 7 8

-XiYLA2 9 10 11 12

-LD23 0,75mm² 21 22 23 24

-LD23 0,75mm² 25 26 27 28

-LD23 0,75mm² 29 30 31 32

-225U1
9270/21-17-14s

-225U4
9270/21-17-14s

-225U6
9270/21-17-14s

I / II
Direction1
LF1
Direction2
LF2
24V DC
Exi
Channel 1
Exi
Channel 2

10+ 11- 12+ 13-

7 9

1 2 /172.1B
3 4 /172.2B

1 2 /172.3B
3 4 /172.4B

1 2 /172.5B
3 4 /172.6B

Index	Revision	Date	name				
2	Final as built	19-3-2025	M.Besseling	Drawn:	31-10-2024	elshofjo	
1	For approval	13-11-2024	besselingmi	Engineer:	19-9-2024	besselingmi	
				Approved:			
				Changed:			

KANON LOADING EQUIPMENT B.V.

Ref: P242068, B242352 Quote:
Order: 2011280786 Item: 001000

KANON LOADING EQUIPMENT
www.kanon.nl

Electromach B.V.
Jan Tinbergenstraat 193
7559 SP Hengelo
The Netherlands
US

Circuit diagram
IS isolators +MLA-B

Int. Revision :	P242068A91
Drawing No.:	+JOCC-DCB2
2011280786-001000-24	Scale: 1 mm : 1 mm / A3
Refer to protection notice ISO 16016	Sheet: 225

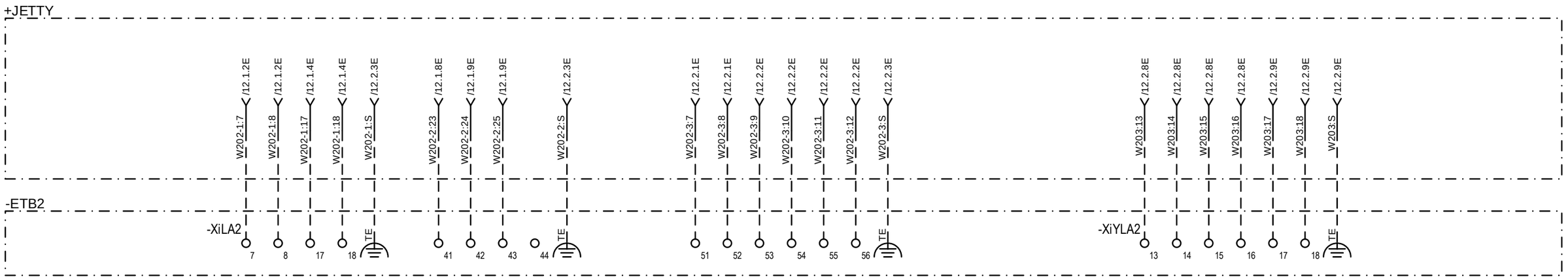

Index	Revision	Date	name							
2	Final as built	19-3-2025	M.Besseling	Drawn:	31-10-2024	elshofjo	**KANON LOADING EQUIPMENT B.V.**			
1	For approval	13-11-2024	besselingmi	Engineer:	19-9-2024	besselingmi				
				Approved:			Ref: P242068, B242352	Quote:		
				Changed:			Order: 2011280786	Item: 001000		

KANON LOADING EQUIPMENT
www.kanon.nl

Electromach B.V.
Jan Tinbergenstraat 193
7559 SP Hengelo
The Netherlands
US

Circuit diagram
IS isolators +MLA-B

Int. Revision :	P242068A91
Drawing No.:	+JOCC-DCB2
2011280786-001000-24	Scale: 1 mm : 1 mm / A3
Refer to protection notice ISO 16016	Sheet: 228

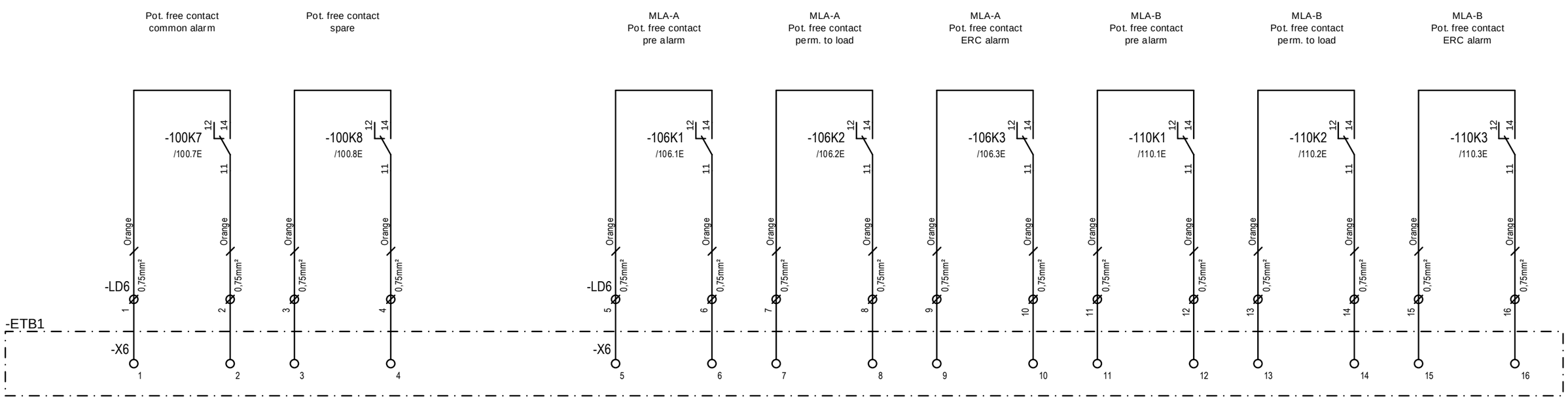

2	*Final as built*	*19-3-2025*	*M.Besseling*	Drawn:	*31-10-2024*	*elshofjo*	***KANON LOADING EQUIPMENT B.V.***		***Electromach B.V.***	*Circuit diagram*	Int. Revision : *P242068A91*
1	*For approval*	*13-11-2024*	*besselingmi*	Engineer:	*19-9-2024*	*besselingmi*			*Jan Tinbergenstraat 193*	*potential free contacts*	Drawing No.: *+JOCC-DCB1*
				Approved:			Ref: *P242068, B242352*	Quote:	*7559 SP Hengelo*		*2011280786-001000-24* Scale: *1 mm : 1 mm / A3*
Index	Revision	Date	name	Changed:			Order: *2011280786*	Item: *001000*	*The Netherlands*		Refer to protection notice ISO 16016 Sheet: *240*

KANON LOADING EQUIPMENT
www.kanon.nl

Hydraulic pump 1

Hydraulic pump 2

Slow solenoid

Up solenoid with feedback

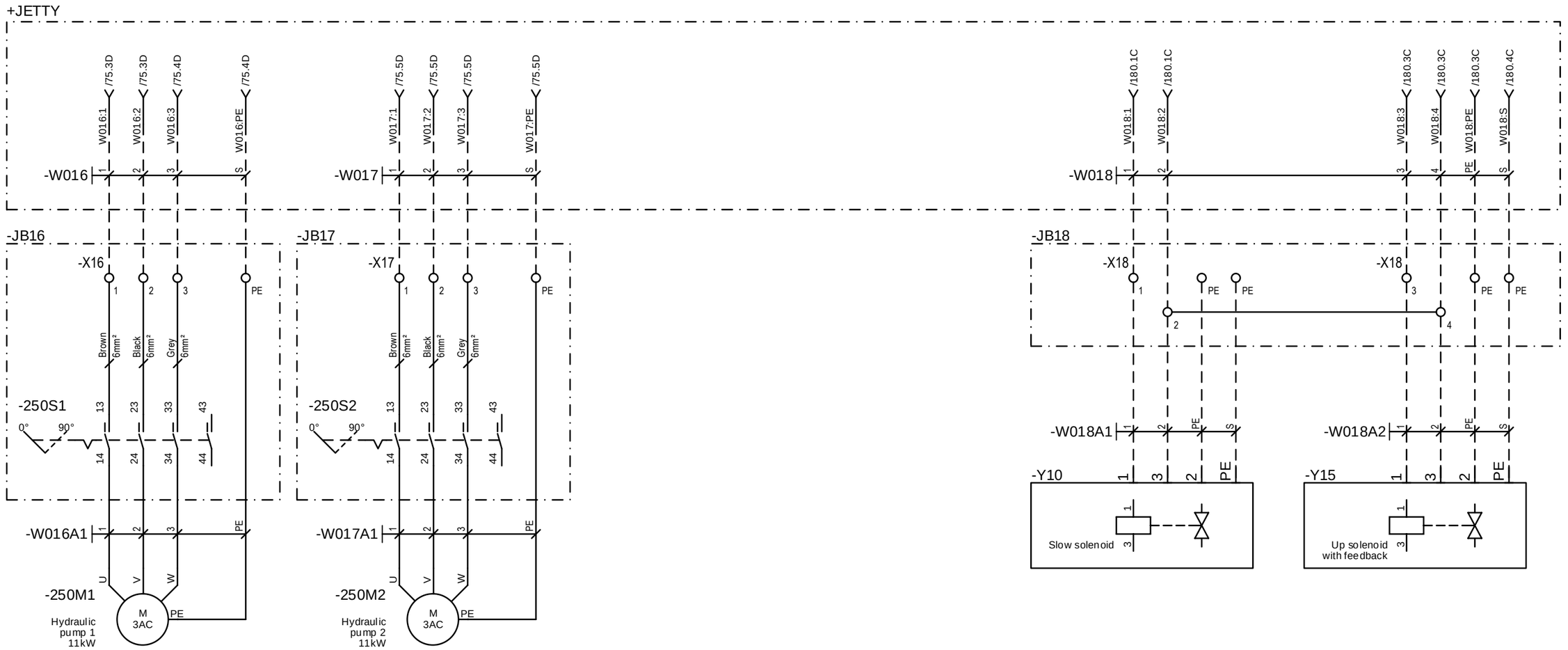

Index	Revision	Date	name								
2	Final as built	19-3-2025	M.Besseling	Drawn:	31-10-2024	elshofjo	**KANON LOADING EQUIPMENT B.V.**		**Electromach B.V.**	Circuit diagram	Int. Revision :	P242068A91
1	For approval	13-11-2024	besselingmi	Engineer:	19-9-2024	besselingmi			Jan Tinbergenstraat 193	+HPP - Pump, Valve	Drawing No.:	+HPP
				Approved:			Ref: P242068, B242352	Quote:	7559 SP Hengelo		2011280786-001000-24	Scale: 1 mm : 1 mm / A3
				Changed:			Order: 2011280786	Item: 001000	The Netherlands		Refer to protection notice ISO 16016	Sheet: 250

KANON LOADING EQUIPMENT
www.kanon.nl
US

Low oil
level switch

Low oil
pressure switch accu 1

Low oil
pressure switch accu 2

-Y15
feedback

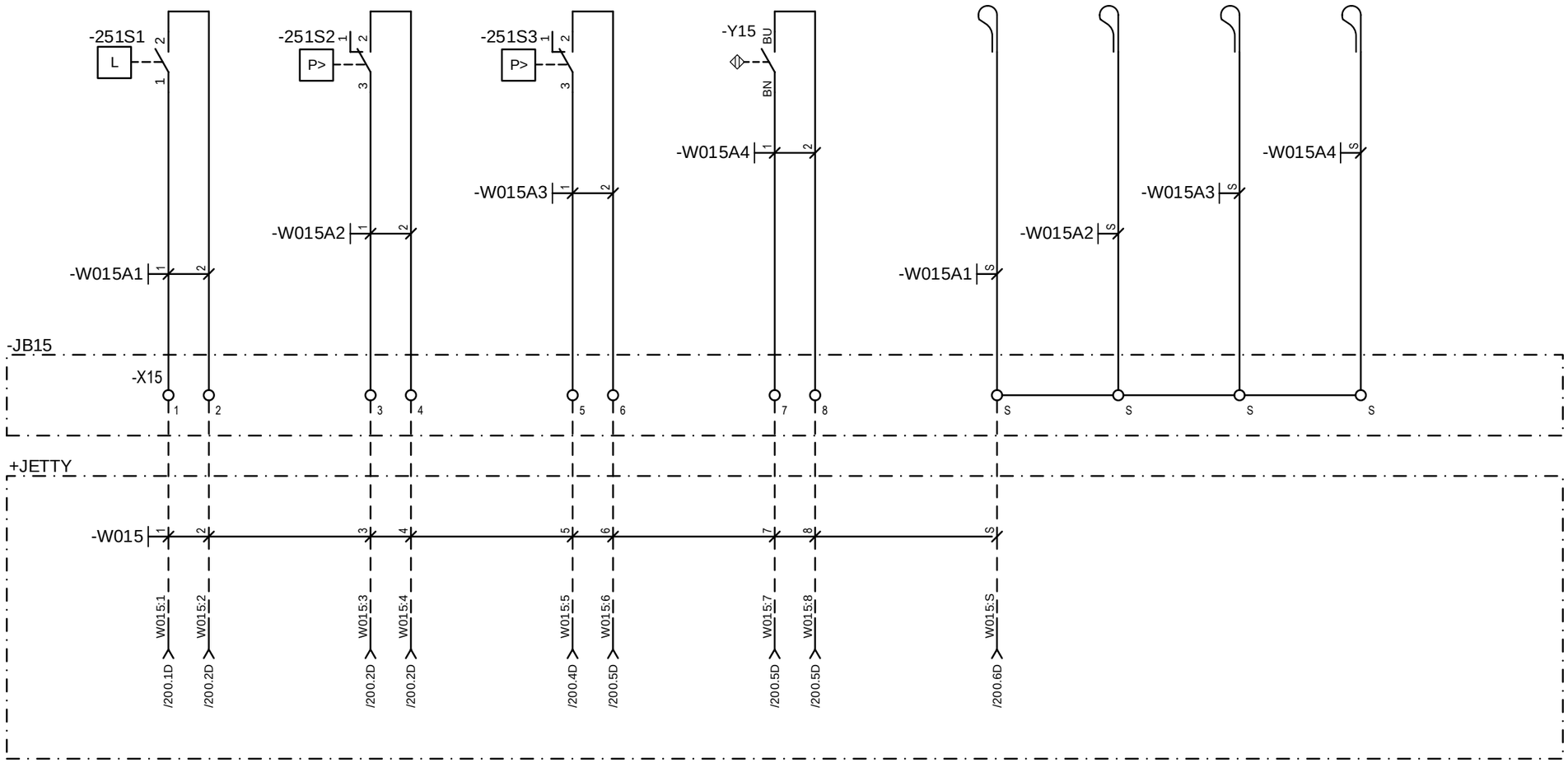

2	*Final as built*	*19-3-2025*	*M.Besseling*	Drawn:	*31-10-2024*	*elshofjo*	***KANON LOADING EQUIPMENT B.V.***		***Electromach B.V.***	*Circuit diagram*	Int. Revision :	*P242068A91*
1	*For approval*	*13-11-2024*	*besselingmi*	Engineer:	*19-9-2024*	*besselingmi*			*Jan Tinbergenstraat 193*	*+HPP - Level, Pressure switch*	Drawing No.:	*+HPP*
				Approved:			Ref: *P242068, B242352*	Quote:	*7559 SP Hengelo*		*2011280786-001000-24*	Scale: *1 mm : 1 mm / A3*
Index	Revision	Date	name	Changed:			Order: *2011280786*	Item: *001000*	*The Netherlands*		Refer to protection notice ISO 16016	Sheet: *251*

KANON LOADING EQUIPMENT
www.kanon.nl
US

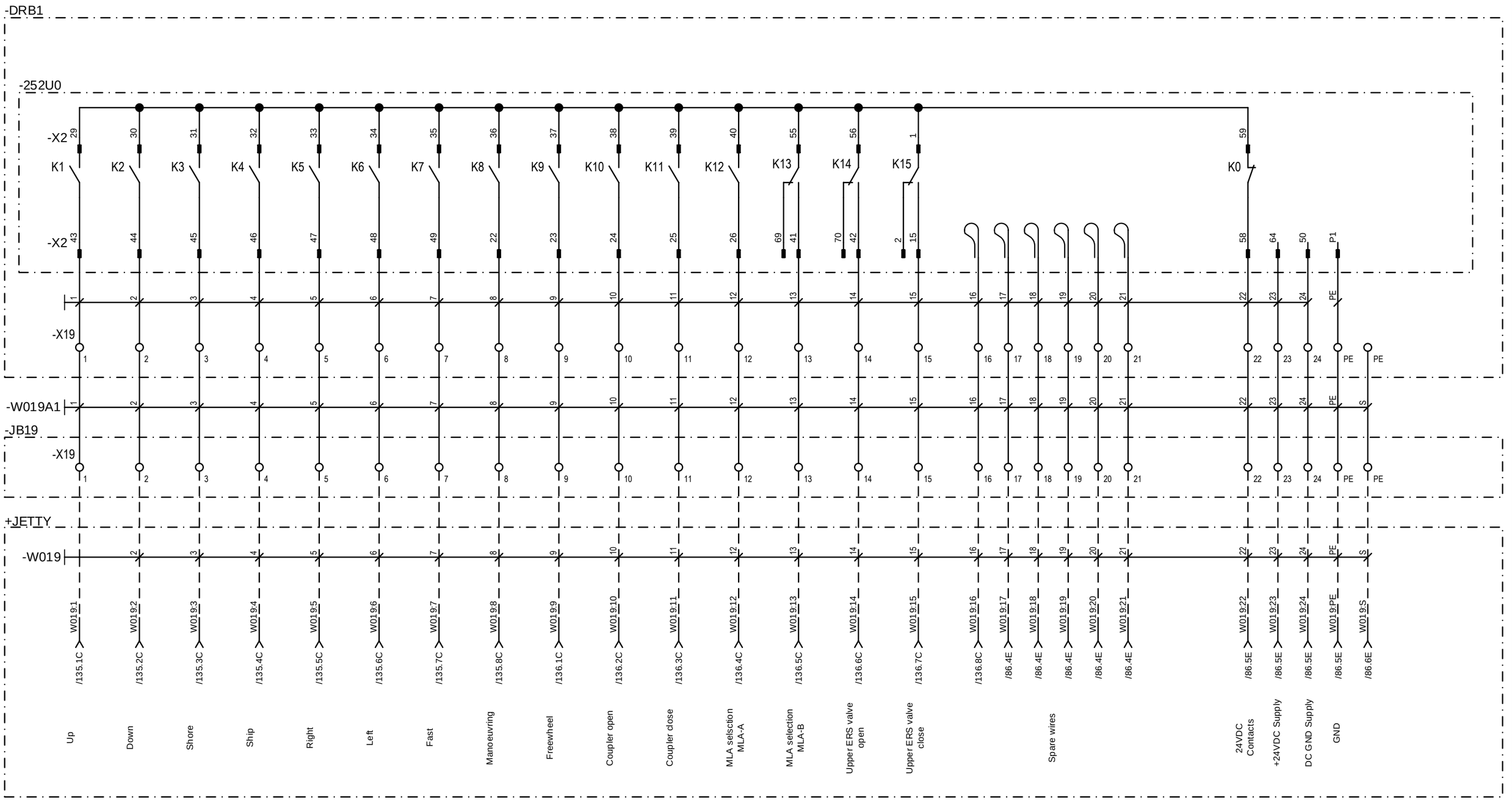

Index	Revision	Date	name	Changed:		
3	Final as built	19-3-2025	M.Besseling	Drawn:	31-10-2024	elshofjo
2	Final for production	22-11-2024	besselingmi	Engineer:	19-9-2024	besselingmi
1	For approval	13-11-2024	besselingmi	Approved:		

KANON LOADING EQUIPMENT B.V.

Ref: P242068, B242352 | Quote:

Order: 2011280786 | Item: 001000

KANON LOADING EQUIPMENT
www.kanon.nl

Electromach B.V.
Jan Tinbergenstraat 193
7559 SP Hengelo
The Netherlands

Circuit diagram
+HPP - Radio receiver

Int. Revision :	P242068A91
Drawing No.:	+HPP
2011280786-001000-24	Scale: 1 mm : 1 mm / A3
Refer to protection notice ISO 16016	Sheet: 252

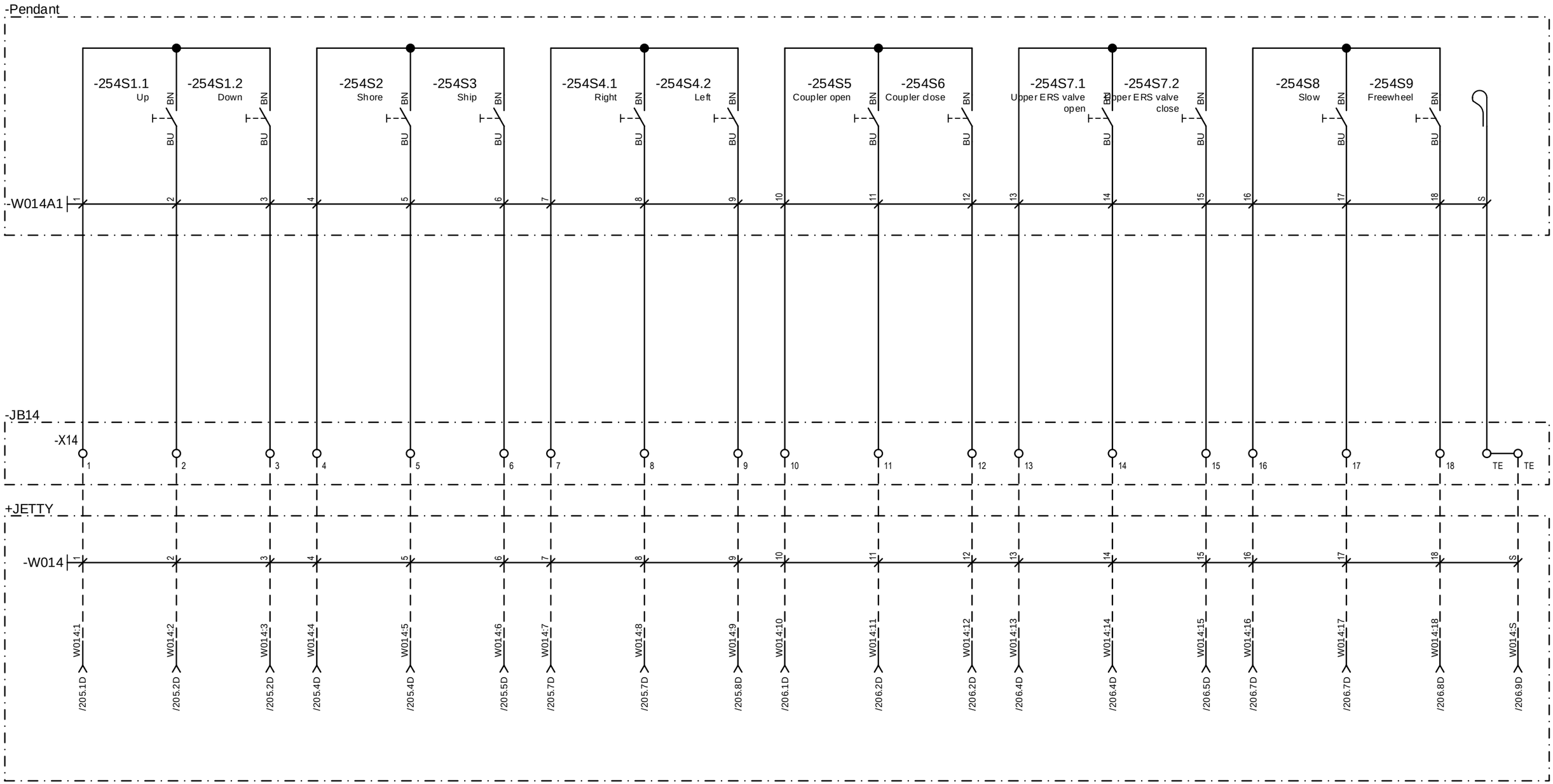

Index	Revision	Date	name								
2	Final as built	19-3-2025	M.Besseling	Drawn:	31-10-2024	elshofjo	**KANON LOADING EQUIPMENT B.V.**				
1	For approval	13-11-2024	besselingmi	Engineer:	19-9-2024	besselingmi					
				Approved:			Ref: P242068, B242352	Quote:			
				Changed:			Order: 2011280786	Item: 001000			

KANON LOADING EQUIPMENT
www.kanon.nl

Electromach B.V.
Jan Tinbergenstraat 193
7559 SP Hengelo
The Netherlands

Circuit diagram
+HPP - Pendant

Int. Revision :	P242068A91
Drawing No.: 2011280786-001000-24	+HPP
	Scale: 1 mm : 1 mm / A3
Refer to protection notice ISO 16016	Sheet: 254

Conductor bushings connection report

Row	▲ Part of	Desi…	Destination 1	Destination 2	Wire size / gauge	Circuit Diagram Reference	Associated Potential/…
1	+JOCC -DCB1 -DD1	1	+JOCC -DCB1 -Xint115L 2	+JOCC -DCB2 -Xint115L 1	2,5mm²	P242068A91 Circuit diagram +JOCC 76.1A	
2	+JOCC -DCB1 -DD1	2	+JOCC -DCB1 -Xint115N 2	+JOCC -DCB2 -Xint115N 1	2,5mm²	P242068A91 Circuit diagram +JOCC 76.1C	
3	+JOCC -DCB1 -DD1	3			2,5mm²		
4	+JOCC -DCB1 -DD1	4			2,5mm²		
5	+JOCC -DCB1 -DD1	5			2,5mm²		
6	+JOCC -DCB1 -DD1	6			2,5mm²		
7	+JOCC -DCB1 -DD1	7			2,5mm²		
8	+JOCC -DCB1 -DD1	8			2,5mm²		
9	+JOCC -DCB1 -DD1	9			2,5mm²		
10	+JOCC -DCB1 -DD1	10			2,5mm²		
11	+JOCC -DCB1 -DD1	11			2,5mm²		
12	+JOCC -DCB1 -DD1	12	+JOCC -DCB1 -Xint115N PE	+JOCC -DCB2 -Xint115N PE	2,5mm²	P242068A91 Circuit diagram +JOCC 76.1C	+JOCC -DCB1 PE

Index	Revision	Date	name			
2	Final as built	19-3-2025	M.Besseling	Drawn:	31-10-2024	elshofjo
1	For approval	13-11-2024	besselingmi	Engineer:	19-9-2024	besselingmi
				Approved:		
				Changed:		

KANON LOADING EQUIPMENT B.V.

Ref: P242068, B242352 Quote:

Order: 2011280786 Item: 001000

KANON LOADING EQUIPMENT

www.kanon.nl

Electromach BV
Jan Tinbergenstraat 193
7559 SP Hengelo
The Netherlands

Conductor bushings connection report

Int. Revision :	P242068A91
Drawing No.: 2011280786-001000-24	+JOCC-DCB1-DD1
	Scale: 1 mm : 1 mm / A3
Refer to protection notice ISO 16016	Sheet: 260 page 1 / 1

Conductor bushings connection report

Row	▲ Part of	Desi…	Destination 1	Destination 2	Wire size / gauge	Circuit Diagram Reference	Associated Potential/…
1	+JOCC -DCB1 -DD2	1	+JOCC -DCB1 -Xint24+ 2	+JOCC -DCB2 -Xint24+ 1	6mm²	P242068A91 Circuit diagram +JOCC 80.1A	
2	+JOCC -DCB1 -DD2	2	+JOCC -DCB1 -Xint24- 2	+JOCC -DCB2 -Xint24- 1	6mm²	P242068A91 Circuit diagram +JOCC 80.1C	
3	+JOCC -DCB1 -DD2	3			6mm²		
4	+JOCC -DCB1 -DD2	4			6mm²		
5	+JOCC -DCB1 -DD2	5			6mm²		
6	+JOCC -DCB1 -DD2	6			6mm²		

Index	Revision	Date	name
2	Final as built	19-3-2025	M.Besseling
1	For approval	13-11-2024	besselingmi

Drawn:	31-10-2024	elshofjo	
Engineer:	19-9-2024	besselingmi	
Approved:			
Changed:			

KANON LOADING EQUIPMENT B.V.

Ref: P242068, B242352 Quote:

Order: 2011280786 Item: 001000

KANON LOADING EQUIPMENT

www.kanon.nl

Electromach BV
Jan Tinbergenstraat 193
7559 SP Hengelo
The Netherlands
US

Conductor bushings connection report

Int. Revision :	P242068A91
Drawing No.: 2011280786-001000-24	+JOCC-DCB1-DD2
	Scale: 1 mm : 1 mm / A3
Refer to protection notice ISO 16016	Sheet: 261 page 1 / 1

Conductor bushings connection report

Row	▲ Part of	Desi…	Destination 1	Destination 2	Wire size / gauge	Circuit Diagram Reference	Associated Potential/…
1	+JOCC -DCB1 -DD3	1	+JOCC -DCB1 -190K2 13	+JOCC -DCB2 -Xint10 8	0,75mm²	P242068A91 Circuit diagram +JOCC 87.2C	+JOCC -DCB1 87F3+…
2	+JOCC -DCB1 -DD3	2	+JOCC -DCB1 -163K4 A2	+JOCC -DCB2 -Xint10 11	0,75mm²	P242068A91 Circuit diagram +JOCC 87.3C	+JOCC -DCB1 87F3-…
3	+JOCC -DCB1 -DD3	3	+JOCC -DCB1 -195K2 13	+JOCC -DCB2 -Xint10 12	0,75mm²	P242068A91 Circuit diagram +JOCC 87.5C	+JOCC -DCB1 87F6+…
4	+JOCC -DCB1 -DD3	4	+JOCC -DCB1 -169K4 A2	+JOCC -DCB2 -Xint10 15	0,75mm²	P242068A91 Circuit diagram +JOCC 87.6C	+JOCC -DCB1 87F6-…
5	+JOCC -DCB1 -DD3	5	+JOCC -DCB1 -Xint6 3	+JOCC -DCB2 -Xint10 3	0,75mm²	P242068A91 Circuit diagram +JOCC 134.3A	+JOCC -DCB2 86F2+…
6	+JOCC -DCB1 -DD3	6	+JOCC -DCB1 -Xint6 4	+JOCC -DCB2 -94U2 IN 2 IN 2	0,75mm²	P242068A91 Circuit diagram +JOCC 134.3C	
7	+JOCC -DCB1 -DD3	7	+JOCC -DCB1 -190K2 14	+JOCC -DCB2 -96U6 IN 6 I6	0,75mm²	P242068A91 Circuit diagram +JOCC 162.7B	
8	+JOCC -DCB1 -DD3	8	+JOCC -DCB1 -163K1 22	+JOCC -DCB2 -96U6 IN 7 I7	0,75mm²	P242068A91 Circuit diagram +JOCC 162.8B	
9	+JOCC -DCB1 -DD3	9	+JOCC -DCB1 -163K1 A1	+JOCC -DCB2 -96U6 OUT 0 O0	0,75mm²	P242068A91 Circuit diagram +JOCC 163.1D	
10	+JOCC -DCB1 -DD3	10	+JOCC -DCB1 -163K2 A1	+JOCC -DCB2 -96U6 OUT 1 O1	0,75mm²	P242068A91 Circuit diagram +JOCC 163.2D	
11	+JOCC -DCB1 -DD3	11	+JOCC -DCB1 -163K3 A1	+JOCC -DCB2 -96U6 OUT 2 O2	0,75mm²	P242068A91 Circuit diagram +JOCC 163.3D	
12	+JOCC -DCB1 -DD3	12	+JOCC -DCB1 -163K4 A1	+JOCC -DCB2 -96U6 OUT 3 O3	0,75mm²	P242068A91 Circuit diagram +JOCC 163.4D	
13	+JOCC -DCB1 -DD3	13	+JOCC -DCB1 -195K2 14	+JOCC -DCB2 -97U2 IN 6 I6	0,75mm²	P242068A91 Circuit diagram +JOCC 168.7B	
14	+JOCC -DCB1 -DD3	14	+JOCC -DCB1 -169K1 22	+JOCC -DCB2 -97U2 IN 7 I7	0,75mm²	P242068A91 Circuit diagram +JOCC 168.8B	
15	+JOCC -DCB1 -DD3	15	+JOCC -DCB1 -169K1 A1	+JOCC -DCB2 -97U2 OUT 0 O0	0,75mm²	P242068A91 Circuit diagram +JOCC 169.1D	
16	+JOCC -DCB1 -DD3	16	+JOCC -DCB1 -169K2 A1	+JOCC -DCB2 -97U2 OUT 1 O1	0,75mm²	P242068A91 Circuit diagram +JOCC 169.2D	
17	+JOCC -DCB1 -DD3	17	+JOCC -DCB1 -169K3 A1	+JOCC -DCB2 -97U2 OUT 2 O2	0,75mm²	P242068A91 Circuit diagram +JOCC 169.3D	
18	+JOCC -DCB1 -DD3	18	+JOCC -DCB1 -169K4 A1	+JOCC -DCB2 -97U2 OUT 3 O3	0,75mm²	P242068A91 Circuit diagram +JOCC 169.4D	
19	+JOCC -DCB1 -DD3	19	+JOCC -DCB1 -Xint6 1	+JOCC -DCB2 -96U4 IN 1 I1	0,75mm²	P242068A91 Circuit diagram +JOCC 160.2D	
20	+JOCC -DCB1 -DD3	20	+JOCC -DCB1 -Xint6 2	+JOCC -DCB2 -96U4 IN 2 I2	0,75mm²	P242068A91 Circuit diagram +JOCC 160.3D	
21	+JOCC -DCB1 -DD3	21			0,75mm²		
22	+JOCC -DCB1 -DD3	22			0,75mm²		
23	+JOCC -DCB1 -DD3	23			0,75mm²		
24	+JOCC -DCB1 -DD3	24			0,75mm²		
25	+JOCC -DCB1 -DD3	25			0,75mm²		
26	+JOCC -DCB1 -DD3	26			0,75mm²		
27	+JOCC -DCB1 -DD3	27			0,75mm²		
28	+JOCC -DCB1 -DD3	28			0,75mm²		
29	+JOCC -DCB1 -DD3	29			0,75mm²		
30	+JOCC -DCB1 -DD3	30			0,75mm²		
31	+JOCC -DCB1 -DD3	31			0,75mm²		
32	+JOCC -DCB1 -DD3	32			0,75mm²		
33	+JOCC -DCB1 -DD3	33			0,75mm²		
34	+JOCC -DCB1 -DD3	34			0,75mm²		
35	+JOCC -DCB1 -DD3	35			0,75mm²		
36	+JOCC -DCB1 -DD3	36			0,75mm²		
37	+JOCC -DCB1 -DD3	37			0,75mm²		
38	+JOCC -DCB1 -DD3	38			0,75mm²		
39	+JOCC -DCB1 -DD3	39			0,75mm²		

Index	Revision	Date	name
2	Final as built	19-3-2025	M.Besseling
1	For approval	13-11-2024	besselingmi

Drawn: 31-10-2024 elshofjo
Engineer: 19-9-2024 besselingmi
Approved:
Changed:

KANON LOADING EQUIPMENT B.V.

Ref: P242068, B242352 Quote:
Order: 2011280786 Item: 001000

KANON LOADING EQUIPMENT
www.kanon.nl

Electromach BV
Jan Tinbergenstraat 193
7559 SP Hengelo
The Netherlands
US

Conductor bushings connection report

Int. Revision : P242068A91
Drawing No.: +JOCC-DCB1-DD3
2011280786-001000-24 Scale: 1 mm : 1 mm / A3
Refer to protection notice ISO 16016 Sheet: 262 page 1 / 2

Conductor bushings connection report

Row	▲ Part of	Desi…	Destination 1	Destination 2	Wire size / gauge	Circuit Diagram Reference	Associated Potential/…
40	+JOCC -DCB1 -DD3	40			0,75mm²		
41	+JOCC -DCB1 -DD3	41			0,75mm²		
42	+JOCC -DCB1 -DD3	42			0,75mm²		
43	+JOCC -DCB1 -DD3	43			0,75mm²		
44	+JOCC -DCB1 -DD3	44			0,75mm²		
45	+JOCC -DCB1 -DD3	45			0,75mm²		
46	+JOCC -DCB1 -DD3	46			0,75mm²		
47	+JOCC -DCB1 -DD3	47			0,75mm²		
48	+JOCC -DCB1 -DD3	48			0,75mm²		

Index	Revision	Date	name
2	Final as built	19-3-2025	M.Besseling
1	For approval	13-11-2024	besselingmi

Drawn: 31-10-2024 elshofjo
Engineer: 19-9-2024 besselingmi
Approved:
Changed:

KANON LOADING EQUIPMENT B.V.

Ref: P242068, B242352 Quote:
Order: 2011280786 Item: 001000

KANON LOADING EQUIPMENT
www.kanon.nl

Electromach BV
Jan Tinbergenstraat 193
7559 SP Hengelo
The Netherlands
US

Conductor bushings connection report

Int. Revision : P242068A91
Drawing No.: +JOCC-DCB1-DD3
2011280786-001000-24 Scale: 1 mm : 1 mm / A3
Refer to protection notice ISO 16016 Sheet: 262 page 2 / 2

Conductor bushings connection report

Row	▲ Part of	Desi…	Destination 1	Destination 2	Wire size / gauge	Circuit Diagram Reference	Associated Potential/…
1	+JOCC -DCB1 -LD1	1	+JOCC -DCB1 -75F5 1/L1	+JOCC -ETB1 -75S0 13	6mm²	P242068A91 Circuit diagram +JOCC 75.0B	
2	+JOCC -DCB1 -LD1	2	+JOCC -DCB1 -75F5 3/L2	+JOCC -ETB1 -75S0 23	6mm²	P242068A91 Circuit diagram +JOCC 75.1B	
3	+JOCC -DCB1 -LD1	3	+JOCC -DCB1 -75F5 5/L3	+JOCC -ETB1 -75S0 33	6mm²	P242068A91 Circuit diagram +JOCC 75.1B	
4	+JOCC -DCB1 -LD1	4	+JOCC -DCB1 -89K1 2	+JOCC -ETB1 -X016 1	6mm²	P242068A91 Circuit diagram +JOCC 75.3C	
5	+JOCC -DCB1 -LD1	5	+JOCC -DCB1 -89K1 4	+JOCC -ETB1 -X016 2	6mm²	P242068A91 Circuit diagram +JOCC 75.3C	
6	+JOCC -DCB1 -LD1	6	+JOCC -DCB1 -89K1 6	+JOCC -ETB1 -X016 3	6mm²	P242068A91 Circuit diagram +JOCC 75.4C	
7	+JOCC -DCB1 -LD1	7	+JOCC -DCB1 -89K2 2	+JOCC -ETB1 -X017 1	6mm²	P242068A91 Circuit diagram +JOCC 75.5C	
8	+JOCC -DCB1 -LD1	8	+JOCC -DCB1 -89K2 4	+JOCC -ETB1 -X017 2	6mm²	P242068A91 Circuit diagram +JOCC 75.5C	
9	+JOCC -DCB1 -LD1	9	+JOCC -DCB1 -89K2 6	+JOCC -ETB1 -X017 3	6mm²	P242068A91 Circuit diagram +JOCC 75.5C	
10	+JOCC -DCB1 -LD1	10	+JOCC -DCB1 -75F9.1 1/L1	+JOCC -ETB1 -75S7 13	6mm²	P242068A91 Circuit diagram +JOCC 75.7B	
11	+JOCC -DCB1 -LD1	11	+JOCC -DCB1 -75F9.1 3/L2	+JOCC -ETB1 -75S7 23	6mm²	P242068A91 Circuit diagram +JOCC 75.7B	
12	+JOCC -DCB1 -LD1	12	+JOCC -DCB1 -XPE PE	+JOCC -ETB1 -PE-RAIL 1	6mm²	P242068A91 Circuit diagram +JOCC 75.2B	+JOCC -DCB1 PE

Index	Revision	Date	name			
2	Final as built	19-3-2025	M.Besseling	Drawn:	31-10-2024	elshofjo
1	For approval	13-11-2024	besselingmi	Engineer:	19-9-2024	besselingmi
				Approved:		
				Changed:		

KANON LOADING EQUIPMENT B.V.

Ref: P242068, B242352 Quote:

Order: 2011280786 Item: 001000

KANON LOADING EQUIPMENT

www.kanon.nl

Electromach BV
Jan Tinbergenstraat 193
7559 SP Hengelo
The Netherlands
US

Conductor bushings connection report

Int. Revision :	P242068A91
Drawing No.: 2011280786-001000-24	+JOCC-DCB1-LD1
	Scale: 1 mm : 1 mm / A3
Refer to protection notice ISO 16016	Sheet: 270 page 1 / 1

Conductor bushings connection report

Row	▲ Part of	Desi…	Destination 1	Destination 2	Wire size / gauge	Circuit Diagram Reference	Associated Potential/…
1	+JOCC -DCB2 -LD3	1	+JOCC -DCB2 -Xint10 1	+JOCC -ECB2 -XCP3 1	0,75mm²	P242068A91 Circuit diagram +JOCC 86.1C	
2	+JOCC -DCB2 -LD3	2	+JOCC -DCB2 -Xint10 6	+JOCC -ECB2 -XCP3 2	0,75mm²	P242068A91 Circuit diagram +JOCC 87.1C	
3	+JOCC -DCB2 -LD3	3	+JOCC -DCB2 -94U1 IN 0 IN 0	+JOCC -ECB2 -XCP3 3	0,75mm²	P242068A91 Circuit diagram +JOCC 130.1C	
4	+JOCC -DCB2 -LD3	4	+JOCC -DCB2 -94U1 IN 1 IN 1	+JOCC -ECB2 -XCP3 4	0,75mm²	P242068A91 Circuit diagram +JOCC 130.2C	
5	+JOCC -DCB2 -LD3	5	+JOCC -DCB2 -94U1 IN 2 IN 2	+JOCC -ECB2 -XCP3 5	0,75mm²	P242068A91 Circuit diagram +JOCC 130.3C	
6	+JOCC -DCB2 -LD3	6	+JOCC -DCB2 -94U1 IN 3 IN 3	+JOCC -ECB2 -XCP3 6	0,75mm²	P242068A91 Circuit diagram +JOCC 130.4C	
7	+JOCC -DCB2 -LD3	7	+JOCC -DCB2 -94U1 IN 4 IN 4	+JOCC -ECB2 -XCP3 7	0,75mm²	P242068A91 Circuit diagram +JOCC 130.5C	
8	+JOCC -DCB2 -LD3	8	+JOCC -DCB2 -94U1 IN 5 IN 5	+JOCC -ECB2 -XCP3 8	0,75mm²	P242068A91 Circuit diagram +JOCC 130.6C	
9	+JOCC -DCB2 -LD3	9	+JOCC -DCB2 -94U1 IN 6 IN 6	+JOCC -ECB2 -XCP3 9	0,75mm²	P242068A91 Circuit diagram +JOCC 130.7C	
10	+JOCC -DCB2 -LD3	10	+JOCC -DCB2 -94U1 IN 7 IN 7	+JOCC -ECB2 -XCP3 10	0,75mm²	P242068A91 Circuit diagram +JOCC 130.8C	
11	+JOCC -DCB2 -LD3	11	+JOCC -DCB2 -94U1 IN 8 IN 8	+JOCC -ECB2 -XCP3 11	0,75mm²	P242068A91 Circuit diagram +JOCC 131.1C	
12	+JOCC -DCB2 -LD3	12	+JOCC -DCB2 -94U1 IN 9 IN 9	+JOCC -ECB2 -XCP3 12	0,75mm²	P242068A91 Circuit diagram +JOCC 131.2C	
13	+JOCC -DCB2 -LD3	13	+JOCC -DCB2 -94U1 IN 10 IN 10	+JOCC -ECB2 -XCP3 13	0,75mm²	P242068A91 Circuit diagram +JOCC 131.3C	
14	+JOCC -DCB2 -LD3	14	+JOCC -DCB2 -94U1 IN 11 IN 11	+JOCC -ECB2 -XCP3 14	0,75mm²	P242068A91 Circuit diagram +JOCC 131.4C	
15	+JOCC -DCB2 -LD3	15	+JOCC -DCB2 -94U1 IN 12 IN 12	+JOCC -ECB2 -XCP3 15	0,75mm²	P242068A91 Circuit diagram +JOCC 131.5C	
16	+JOCC -DCB2 -LD3	16	+JOCC -DCB2 -94U1 IN 13 IN 13	+JOCC -ECB2 -XCP3 16	0,75mm²	P242068A91 Circuit diagram +JOCC 131.6C	
17	+JOCC -DCB2 -LD3	17	+JOCC -DCB2 -94U1 IN 14 IN 14	+JOCC -ECB2 -XCP3 17	0,75mm²	P242068A91 Circuit diagram +JOCC 131.7C	
18	+JOCC -DCB2 -LD3	18	+JOCC -DCB2 -94U1 IN 15 IN 15	+JOCC -ECB2 -XCP3 18	0,75mm²	P242068A91 Circuit diagram +JOCC 131.8C	
19	+JOCC -DCB2 -LD3	19	+JOCC -DCB2 -94U1 IN 16 IN 16	+JOCC -ECB2 -XCP3 19	0,75mm²	P242068A91 Circuit diagram +JOCC 132.1C	
20	+JOCC -DCB2 -LD3	20	+JOCC -DCB2 -94U1 IN 17 IN 17	+JOCC -ECB2 -XCP3 20	0,75mm²	P242068A91 Circuit diagram +JOCC 132.2C	
21	+JOCC -DCB2 -LD3	21	+JOCC -DCB2 -94U1 IN 18 IN 18	+JOCC -ECB2 -XCP3 21	0,75mm²	P242068A91 Circuit diagram +JOCC 132.3C	
22	+JOCC -DCB2 -LD3	22	+JOCC -DCB2 -94U1 IN 19 IN 19	+JOCC -ECB2 -XCP3 22	0,75mm²	P242068A91 Circuit diagram +JOCC 132.4C	
23	+JOCC -DCB2 -LD3	23	+JOCC -DCB2 -94U1 IN 20 IN 20	+JOCC -ECB2 -XCP3 23	0,75mm²	P242068A91 Circuit diagram +JOCC 132.5C	
24	+JOCC -DCB2 -LD3	24	+JOCC -DCB2 -94U1 IN 21 IN 21	+JOCC -ECB2 -XCP3 24	0,75mm²	P242068A91 Circuit diagram +JOCC 132.6C	
25	+JOCC -DCB2 -LD3	25	+JOCC -DCB2 -94U1 IN 22 IN 22	+JOCC -ECB2 -XCP3 25	0,75mm²	P242068A91 Circuit diagram +JOCC 132.7C	
26	+JOCC -DCB2 -LD3	26	+JOCC -DCB2 -94U1 IN 23 IN 23	+JOCC -ECB2 -XCP3 26	0,75mm²	P242068A91 Circuit diagram +JOCC 132.8C	
27	+JOCC -DCB2 -LD3	27	+JOCC -DCB2 -94U1 IN 24 IN 24	+JOCC -ECB2 -XCP3 27	0,75mm²	P242068A91 Circuit diagram +JOCC 133.1C	
28	+JOCC -DCB2 -LD3	28	+JOCC -DCB2 -94U1 IN 25 IN 25	+JOCC -ECB2 -XCP3 28	0,75mm²	P242068A91 Circuit diagram +JOCC 133.2C	
29	+JOCC -DCB2 -LD3	29	+JOCC -DCB2 -94U1 IN 26 IN 26	+JOCC -ECB2 -XCP3 29	0,75mm²	P242068A91 Circuit diagram +JOCC 133.3C	
30	+JOCC -DCB2 -LD3	30	+JOCC -DCB2 -94U1 IN 27 IN 27	+JOCC -ECB2 -XCP3 30	0,75mm²	P242068A91 Circuit diagram +JOCC 133.4C	
31	+JOCC -DCB2 -LD3	31	+JOCC -DCB2 -94U1 IN 28 IN 28	+JOCC -ECB2 -XCP3 31	0,75mm²	P242068A91 Circuit diagram +JOCC 133.5C	
32	+JOCC -DCB2 -LD3	32	+JOCC -DCB2 -94U1 IN 29 IN 29	+JOCC -ECB2 -XCP3 32	0,75mm²	P242068A91 Circuit diagram +JOCC 133.6C	
33	+JOCC -DCB2 -LD3	33	+JOCC -DCB2 -94U1 IN 30 IN 30	+JOCC -ECB2 -XCP3 33	0,75mm²	P242068A91 Circuit diagram +JOCC 133.7C	
34	+JOCC -DCB2 -LD3	34	+JOCC -DCB2 -94U1 IN 31 IN 31	+JOCC -ECB2 -XCP3 34	0,75mm²	P242068A91 Circuit diagram +JOCC 133.8C	
35	+JOCC -DCB2 -LD3	35	+JOCC -DCB2 -96U4 IN 0 I0	+JOCC -ECB2 -XCP3 35	0,75mm²	P242068A91 Circuit diagram +JOCC 160.1C	
36	+JOCC -DCB2 -LD3	36			0,75mm²		
37	+JOCC -DCB2 -LD3	37			0,75mm²		
38	+JOCC -DCB2 -LD3	38			0,75mm²		
39	+JOCC -DCB2 -LD3	39			0,75mm²		

Index	Revision	Date	name
2	Final as built	19-3-2025	M.Besseling
1	For approval	13-11-2024	besselingmi

Drawn: 31-10-2024 elshofjo
Engineer: 19-9-2024 besselingmi
Approved:
Changed:

KANON LOADING EQUIPMENT B.V.

Ref: P242068, B242352 Quote:
Order: 2011280786 Item: 001000

KANON LOADING EQUIPMENT
www.kanon.nl

Electromach BV
Jan Tinbergenstraat 193
7559 SP Hengelo
The Netherlands
US

Conductor bushings connection report

Int. Revision : P242068A91
Drawing No.: +JOCC-DCB2-LD3
2011280786-001000-24 Scale: 1 mm : 1 mm / A3
Refer to protection notice ISO 16016 Sheet: 271 page 1 / 2

Conductor bushings connection report

Row	▲ Part of	Desi…	Destination 1	Destination 2	Wire size / gauge	Circuit Diagram Reference	Associated Potential/…
40	+JOCC -DCB2 -LD3	40			0,75mm²		
41	+JOCC -DCB2 -LD3	41			0,75mm²		
42	+JOCC -DCB2 -LD3	42			0,75mm²		
43	+JOCC -DCB2 -LD3	43			0,75mm²		
44	+JOCC -DCB2 -LD3	44			0,75mm²		
45	+JOCC -DCB2 -LD3	45			0,75mm²		
46	+JOCC -DCB2 -LD3	46			0,75mm²		
47	+JOCC -DCB2 -LD3	47			0,75mm²		
48	+JOCC -DCB2 -LD3	48			0,75mm²		

Index	Revision	Date	name
2	Final as built	19-3-2025	M.Besseling
1	For approval	13-11-2024	besselingmi

Drawn: 31-10-2024 elshofjo
Engineer: 19-9-2024 besselingmi
Approved:
Changed:

KANON LOADING EQUIPMENT B.V.

Ref: P242068, B242352 Quote:
Order: 2011280786 Item: 001000

KANON LOADING EQUIPMENT
www.kanon.nl

Electromach BV
Jan Tinbergenstraat 193
7559 SP Hengelo
The Netherlands
US

Conductor bushings connection report

Int. Revision : P242068A91
Drawing No.: +JOCC-DCB2-LD3
2011280786-001000-24
Scale: 1 mm : 1 mm / A3
Refer to protection notice ISO 16016
Sheet: 271 page 2 / 2

Conductor bushings connection report

Row	▲ Part of	Desi…	Destination 1	Destination 2	Wire size / gauge	Circuit Diagram Reference	Associated Potential/…
1	+JOCC -DCB1 -LD4	1	+JOCC -DCB1 -Xint1 3	+JOCC -ECB1 -XCP4 1	0,75mm²	P242068A91 Circuit diagram +JOCC 81.3C	
2	+JOCC -DCB1 -LD4	2	+JOCC -DCB1 -91U1 OUT 8 OUT 8	+JOCC -ECB1 -XCP4 2	0,75mm²	P242068A91 Circuit diagram +JOCC 101.1C	
3	+JOCC -DCB1 -LD4	3	+JOCC -DCB1 -91U1 OUT 9 OUT 9	+JOCC -ECB1 -XCP4 3	0,75mm²	P242068A91 Circuit diagram +JOCC 101.2C	
4	+JOCC -DCB1 -LD4	4	+JOCC -DCB1 -91U1 OUT 10 OUT 10	+JOCC -ECB1 -XCP4 4	0,75mm²	P242068A91 Circuit diagram +JOCC 101.3C	
5	+JOCC -DCB1 -LD4	5	+JOCC -DCB1 -91U1 OUT 11 OUT 11	+JOCC -ECB1 -XCP4 5	0,75mm²	P242068A91 Circuit diagram +JOCC 101.4C	
6	+JOCC -DCB1 -LD4	6	+JOCC -DCB1 -91U1 OUT 12 OUT 12	+JOCC -ECB1 -XCP4 6	0,75mm²	P242068A91 Circuit diagram +JOCC 101.5C	
7	+JOCC -DCB1 -LD4	7	+JOCC -DCB1 -91U1 OUT 13 OUT 13	+JOCC -ECB1 -XCP4 7	0,75mm²	P242068A91 Circuit diagram +JOCC 101.6C	
8	+JOCC -DCB1 -LD4	8	+JOCC -DCB1 -91U1 OUT 14 OUT 14	+JOCC -ECB1 -XCP4 8	0,75mm²	P242068A91 Circuit diagram +JOCC 101.7C	
9	+JOCC -DCB1 -LD4	9	+JOCC -DCB1 -91U1 OUT 15 OUT 15	+JOCC -ECB1 -XCP4 9	0,75mm²	P242068A91 Circuit diagram +JOCC 101.8C	
10	+JOCC -DCB1 -LD4	10	+JOCC -DCB1 -91U1 OUT 16 OUT 16	+JOCC -ECB1 -XCP4 10	0,75mm²	P242068A91 Circuit diagram +JOCC 102.1C	
11	+JOCC -DCB1 -LD4	11	+JOCC -DCB1 -91U1 OUT 17 OUT 17	+JOCC -ECB1 -XCP4 11	0,75mm²	P242068A91 Circuit diagram +JOCC 102.2C	
12	+JOCC -DCB1 -LD4	12	+JOCC -DCB1 -91U1 OUT 18 OUT 18	+JOCC -ECB1 -XCP4 12	0,75mm²	P242068A91 Circuit diagram +JOCC 102.3C	
13	+JOCC -DCB1 -LD4	13	+JOCC -DCB1 -91U1 OUT 19 OUT 19	+JOCC -ECB1 -XCP4 13	0,75mm²	P242068A91 Circuit diagram +JOCC 102.4C	
14	+JOCC -DCB1 -LD4	14	+JOCC -DCB1 -91U1 OUT 20 OUT 20	+JOCC -ECB1 -XCP4 14	0,75mm²	P242068A91 Circuit diagram +JOCC 102.5C	
15	+JOCC -DCB1 -LD4	15	+JOCC -DCB1 -91U1 OUT 21 OUT 21	+JOCC -ECB1 -XCP4 15	0,75mm²	P242068A91 Circuit diagram +JOCC 102.6C	
16	+JOCC -DCB1 -LD4	16	+JOCC -DCB1 -91U1 OUT 22 OUT 22	+JOCC -ECB1 -XCP4 16	0,75mm²	P242068A91 Circuit diagram +JOCC 102.7C	
17	+JOCC -DCB1 -LD4	17	+JOCC -DCB1 -91U1 OUT 23 OUT 23	+JOCC -ECB1 -XCP4 17	0,75mm²	P242068A91 Circuit diagram +JOCC 102.8C	
18	+JOCC -DCB1 -LD4	18			0,75mm²		
19	+JOCC -DCB1 -LD4	19			0,75mm²		
20	+JOCC -DCB1 -LD4	20			0,75mm²		
21	+JOCC -DCB1 -LD4	21			0,75mm²		
22	+JOCC -DCB1 -LD4	22			0,75mm²		
23	+JOCC -DCB1 -LD4	23			0,75mm²		
24	+JOCC -DCB1 -LD4	24			0,75mm²		
25	+JOCC -DCB1 -LD4	25			0,75mm²		
26	+JOCC -DCB1 -LD4	26			0,75mm²		
27	+JOCC -DCB1 -LD4	27			0,75mm²		
28	+JOCC -DCB1 -LD4	28			0,75mm²		
29	+JOCC -DCB1 -LD4	29			0,75mm²		
30	+JOCC -DCB1 -LD4	30			0,75mm²		
31	+JOCC -DCB1 -LD4	31			0,75mm²		
32	+JOCC -DCB1 -LD4	32			0,75mm²		
33	+JOCC -DCB1 -LD4	33			0,75mm²		
34	+JOCC -DCB1 -LD4	34			0,75mm²		
35	+JOCC -DCB1 -LD4	35			0,75mm²		
36	+JOCC -DCB1 -LD4	36			0,75mm²		
37	+JOCC -DCB1 -LD4	37			0,75mm²		
38	+JOCC -DCB1 -LD4	38			0,75mm²		
39	+JOCC -DCB1 -LD4	39			0,75mm²		

Index	Revision	Date	name
2	Final as built	19-3-2025	M.Besseling
1	For approval	13-11-2024	besselingmi

Drawn: 31-10-2024 elshofjo
Engineer: 19-9-2024 besselingmi
Approved:
Changed:

KANON LOADING EQUIPMENT B.V.

Ref: P242068, B242352 Quote:
Order: 2011280786 Item: 001000

KANON LOADING EQUIPMENT
www.kanon.nl

Electromach BV
Jan Tinbergenstraat 193
7559 SP Hengelo
The Netherlands
US

Conductor bushings connection report

Int. Revision : P242068A91
Drawing No.: +JOCC-DCB1-LD4
2011280786-001000-24 Scale: 1 mm : 1 mm / A3
Refer to protection notice ISO 16016 Sheet: 272 page 1 / 2

Conductor bushings connection report

Row	▲ Part of	Desi…	Destination 1	Destination 2	Wire size / gauge	Circuit Diagram Reference	Associated Potential/…
40	+JOCC -DCB1 -LD4	40			0,75mm²		
41	+JOCC -DCB1 -LD4	41			0,75mm²		
42	+JOCC -DCB1 -LD4	42			0,75mm²		
43	+JOCC -DCB1 -LD4	43			0,75mm²		
44	+JOCC -DCB1 -LD4	44			0,75mm²		
45	+JOCC -DCB1 -LD4	45	+JOCC -DCB1 -100K5 11	+JOCC -ECB2 -X4 1	0,75mm²	P242068A91 Circuit diagram +JOCC 185.1B	
46	+JOCC -DCB1 -LD4	46	+JOCC -DCB1 -Xint- 4	+JOCC -ECB2 -X4 3	0,75mm²	P242068A91 Circuit diagram +JOCC 185.1B	+JOCC -DCB1 81F8.…
47	+JOCC -DCB1 -LD4	47	+JOCC -DCB1 -100K6 14	+JOCC -ECB2 -X4 2	0,75mm²	P242068A91 Circuit diagram +JOCC 185.3B	
48	+JOCC -DCB1 -LD4	48	+JOCC -DCB1 PE	+JOCC -ECB1 PE	0,75mm²	P242068A91 Circuit diagram +JOCC 81.3C	

Index	Revision	Date	name
2	Final as built	19-3-2025	M.Besseling
1	For approval	13-11-2024	besselingmi

Drawn: 31-10-2024 elshofjo
Engineer: 19-9-2024 besselingmi
Approved:
Changed:

KANON LOADING EQUIPMENT B.V.

Ref: P242068, B242352 Quote:
Order: 2011280786 Item: 001000

KANON LOADING EQUIPMENT
www.kanon.nl

Electromach BV
Jan Tinbergenstraat 193
7559 SP Hengelo
The Netherlands
US

Conductor bushings connection report

Int. Revision : P242068A91
Drawing No.: +JOCC-DCB1-LD4
2011280786-001000-24 Scale: 1 mm : 1 mm / A3
Refer to protection notice ISO 16016 Sheet: 272 page 2 / 2

Conductor bushings connection report

Row	▲ Part of	Desi…	Destination 1	Destination 2	Wire size / gauge	Circuit Diagram Reference	Associated Potential/…
1	+JOCC -DCB1 -LD5	1	+JOCC -DCB1 -91U2 OUT 0 OUT 0	+JOCC -ECB1 -XCP5 1	0,75mm²	P242068A91 Circuit diagram +JOCC 104.1C	
2	+JOCC -DCB1 -LD5	2	+JOCC -DCB1 -91U2 OUT 1 OUT 1	+JOCC -ECB1 -XCP5 2	0,75mm²	P242068A91 Circuit diagram +JOCC 104.2C	
3	+JOCC -DCB1 -LD5	3	+JOCC -DCB1 -91U2 OUT 2 OUT 2	+JOCC -ECB1 -XCP5 3	0,75mm²	P242068A91 Circuit diagram +JOCC 104.3C	
4	+JOCC -DCB1 -LD5	4	+JOCC -DCB1 -91U2 OUT 3 OUT 3	+JOCC -ECB1 -XCP5 4	0,75mm²	P242068A91 Circuit diagram +JOCC 104.4C	
5	+JOCC -DCB1 -LD5	5	+JOCC -DCB1 -91U2 OUT 4 OUT 4	+JOCC -ECB1 -XCP5 5	0,75mm²	P242068A91 Circuit diagram +JOCC 104.5C	
6	+JOCC -DCB1 -LD5	6	+JOCC -DCB1 -91U2 OUT 5 OUT 5	+JOCC -ECB1 -XCP5 6	0,75mm²	P242068A91 Circuit diagram +JOCC 104.6C	
7	+JOCC -DCB1 -LD5	7	+JOCC -DCB1 -91U2 OUT 6 OUT 6	+JOCC -ECB1 -XCP5 7	0,75mm²	P242068A91 Circuit diagram +JOCC 104.7C	
8	+JOCC -DCB1 -LD5	8	+JOCC -DCB1 -91U2 OUT 7 OUT 7	+JOCC -ECB1 -XCP5 8	0,75mm²	P242068A91 Circuit diagram +JOCC 104.8C	
9	+JOCC -DCB1 -LD5	9	+JOCC -DCB1 -91U2 OUT 8 OUT 8	+JOCC -ECB1 -XCP5 9	0,75mm²	P242068A91 Circuit diagram +JOCC 105.1C	
10	+JOCC -DCB1 -LD5	10	+JOCC -DCB1 -91U2 OUT 9 OUT 9	+JOCC -ECB1 -XCP5 10	0,75mm²	P242068A91 Circuit diagram +JOCC 105.2C	
11	+JOCC -DCB1 -LD5	11	+JOCC -DCB1 -91U2 OUT 10 OUT 10	+JOCC -ECB1 -XCP5 11	0,75mm²	P242068A91 Circuit diagram +JOCC 105.3C	
12	+JOCC -DCB1 -LD5	12	+JOCC -DCB1 -91U2 OUT 11 OUT 11	+JOCC -ECB1 -XCP5 12	0,75mm²	P242068A91 Circuit diagram +JOCC 105.4C	
13	+JOCC -DCB1 -LD5	13	+JOCC -DCB1 -91U2 OUT 12 OUT 12	+JOCC -ECB1 -XCP5 13	0,75mm²	P242068A91 Circuit diagram +JOCC 105.5C	
14	+JOCC -DCB1 -LD5	14	+JOCC -DCB1 -91U2 OUT 13 OUT 13	+JOCC -ECB1 -XCP5 14	0,75mm²	P242068A91 Circuit diagram +JOCC 105.6C	
15	+JOCC -DCB1 -LD5	15	+JOCC -DCB1 -91U2 OUT 14 OUT 14	+JOCC -ECB1 -XCP5 15	0,75mm²	P242068A91 Circuit diagram +JOCC 105.7C	
16	+JOCC -DCB1 -LD5	16	+JOCC -DCB1 -91U2 OUT 15 OUT 15	+JOCC -ECB1 -XCP5 16	0,75mm²	P242068A91 Circuit diagram +JOCC 105.8C	
17	+JOCC -DCB1 -LD5	17	+JOCC -DCB1 -91U3 OUT 0 OUT 0	+JOCC -ECB1 -XCP5 17	0,75mm²	P242068A91 Circuit diagram +JOCC 108.1C	
18	+JOCC -DCB1 -LD5	18	+JOCC -DCB1 -91U3 OUT 1 OUT 1	+JOCC -ECB1 -XCP5 18	0,75mm²	P242068A91 Circuit diagram +JOCC 108.2C	
19	+JOCC -DCB1 -LD5	19	+JOCC -DCB1 -91U3 OUT 2 OUT 2	+JOCC -ECB1 -XCP5 19	0,75mm²	P242068A91 Circuit diagram +JOCC 108.3C	
20	+JOCC -DCB1 -LD5	20	+JOCC -DCB1 -91U3 OUT 3 OUT 3	+JOCC -ECB1 -XCP5 20	0,75mm²	P242068A91 Circuit diagram +JOCC 108.4C	
21	+JOCC -DCB1 -LD5	21	+JOCC -DCB1 -91U3 OUT 4 OUT 4	+JOCC -ECB1 -XCP5 21	0,75mm²	P242068A91 Circuit diagram +JOCC 108.5C	
22	+JOCC -DCB1 -LD5	22	+JOCC -DCB1 -91U3 OUT 5 OUT 5	+JOCC -ECB1 -XCP5 22	0,75mm²	P242068A91 Circuit diagram +JOCC 108.6C	
23	+JOCC -DCB1 -LD5	23	+JOCC -DCB1 -91U3 OUT 6 OUT 6	+JOCC -ECB1 -XCP5 23	0,75mm²	P242068A91 Circuit diagram +JOCC 108.7C	
24	+JOCC -DCB1 -LD5	24	+JOCC -DCB1 -91U3 OUT 7 OUT 7	+JOCC -ECB1 -XCP5 24	0,75mm²	P242068A91 Circuit diagram +JOCC 108.8C	
25	+JOCC -DCB1 -LD5	25	+JOCC -DCB1 -91U3 OUT 8 OUT 8	+JOCC -ECB1 -XCP5 25	0,75mm²	P242068A91 Circuit diagram +JOCC 109.1C	
26	+JOCC -DCB1 -LD5	26	+JOCC -DCB1 -91U3 OUT 9 OUT 9	+JOCC -ECB1 -XCP5 26	0,75mm²	P242068A91 Circuit diagram +JOCC 109.2C	
27	+JOCC -DCB1 -LD5	27	+JOCC -DCB1 -91U3 OUT 10 OUT 10	+JOCC -ECB1 -XCP5 27	0,75mm²	P242068A91 Circuit diagram +JOCC 109.3C	
28	+JOCC -DCB1 -LD5	28	+JOCC -DCB1 -91U3 OUT 11 OUT 11	+JOCC -ECB1 -XCP5 28	0,75mm²	P242068A91 Circuit diagram +JOCC 109.4C	
29	+JOCC -DCB1 -LD5	29	+JOCC -DCB1 -91U3 OUT 12 OUT 12	+JOCC -ECB1 -XCP5 29	0,75mm²	P242068A91 Circuit diagram +JOCC 109.5C	
30	+JOCC -DCB1 -LD5	30	+JOCC -DCB1 -91U3 OUT 13 OUT 13	+JOCC -ECB1 -XCP5 30	0,75mm²	P242068A91 Circuit diagram +JOCC 109.6C	
31	+JOCC -DCB1 -LD5	31	+JOCC -DCB1 -91U3 OUT 14 OUT 14	+JOCC -ECB1 -XCP5 31	0,75mm²	P242068A91 Circuit diagram +JOCC 109.7C	
32	+JOCC -DCB1 -LD5	32	+JOCC -DCB1 -91U3 OUT 15 OUT 15	+JOCC -ECB1 -XCP5 32	0,75mm²	P242068A91 Circuit diagram +JOCC 109.8C	
33	+JOCC -DCB1 -LD5	33			0,75mm²		
34	+JOCC -DCB1 -LD5	34			0,75mm²		
35	+JOCC -DCB1 -LD5	35			0,75mm²		
36	+JOCC -DCB1 -LD5	36			0,75mm²		
37	+JOCC -DCB1 -LD5	37			0,75mm²		
38	+JOCC -DCB1 -LD5	38			0,75mm²		
39	+JOCC -DCB1 -LD5	39			0,75mm²		

Index	Revision	Date	name			
2	Final as built	19-3-2025	M.Besseling	Drawn:	31-10-2024	elshofjo
1	Final for production	22-11-2024	besselingmi	Engineer:	19-9-2024	besselingmi
				Approved:		
				Changed:		

KANON LOADING EQUIPMENT B.V.

Ref: P242068, B242352 Quote:

Order: 2011280786 Item: 001000

KANON LOADING EQUIPMENT

www.kanon.nl

Electromach BV
Jan Tinbergenstraat 193
7559 SP Hengelo
The Netherlands
US

Conductor bushings connection report

Int. Revision :	P242068A91
Drawing No.: 2011280786-001000-24	+JOCC-DCB1-LD5
Refer to protection notice ISO 16016	Scale: 1 mm : 1 mm / A3
	Sheet: 273 page 1 / 2

Conductor bushings connection report

Row	▲ Part of	Desi…	Destination 1	Destination 2	Wire size / gauge	Circuit Diagram Reference	Associated Potential/…
40	+JOCC -DCB1 -LD5	40			0,75mm²		
41	+JOCC -DCB1 -LD5	41			0,75mm²		
42	+JOCC -DCB1 -LD5	42			0,75mm²		
43	+JOCC -DCB1 -LD5	43			0,75mm²		
44	+JOCC -DCB1 -LD5	44			0,75mm²		
45	+JOCC -DCB1 -LD5	45			0,75mm²		
46	+JOCC -DCB1 -LD5	46			0,75mm²		
47	+JOCC -DCB1 -LD5	47			0,75mm²		
48	+JOCC -DCB1 -LD5	48			0,75mm²		

Index	Revision	Date	name
2	Final as built	19-3-2025	M.Besseling
1	Final for production	22-11-2024	besselingmi

Drawn: 31-10-2024 elshofjo
Engineer: 19-9-2024 besselingmi
Approved:
Changed:

KANON LOADING EQUIPMENT B.V.

Ref: P242068, B242352 Quote:
Order: 2011280786 Item: 001000

KANON LOADING EQUIPMENT
www.kanon.nl

Electromach BV
Jan Tinbergenstraat 193
7559 SP Hengelo
The Netherlands
US

Conductor bushings connection report

Int. Revision : P242068A91
Drawing No.: +JOCC-DCB1-LD5
2011280786-001000-24
Scale: 1 mm : 1 mm / A3
Refer to protection notice ISO 16016
Sheet: 273 page 2 / 2

Conductor bushings connection report

Row	▲ Part of	Desi…	Destination 1	Destination 2	Wire size / gauge	Circuit Diagram Reference	Associated Potential/…
1	+JOCC -DCB1 -LD6	1	+JOCC -DCB1 -100K7 14	+JOCC -ETB1 -X6 1	0,75mm²	P242068A91 Circuit diagram +JOCC 240.1B	
2	+JOCC -DCB1 -LD6	2	+JOCC -DCB1 -100K7 11	+JOCC -ETB1 -X6 2	0,75mm²	P242068A91 Circuit diagram +JOCC 240.1B	
3	+JOCC -DCB1 -LD6	3	+JOCC -DCB1 -100K8 14	+JOCC -ETB1 -X6 3	0,75mm²	P242068A91 Circuit diagram +JOCC 240.2B	
4	+JOCC -DCB1 -LD6	4	+JOCC -DCB1 -100K8 11	+JOCC -ETB1 -X6 4	0,75mm²	P242068A91 Circuit diagram +JOCC 240.2B	
5	+JOCC -DCB1 -LD6	5	+JOCC -DCB1 -106K1 14	+JOCC -ETB1 -X6 5	0,75mm²	P242068A91 Circuit diagram +JOCC 240.4B	
6	+JOCC -DCB1 -LD6	6	+JOCC -DCB1 -106K1 11	+JOCC -ETB1 -X6 6	0,75mm²	P242068A91 Circuit diagram +JOCC 240.4B	
7	+JOCC -DCB1 -LD6	7	+JOCC -DCB1 -106K2 14	+JOCC -ETB1 -X6 7	0,75mm²	P242068A91 Circuit diagram +JOCC 240.5B	
8	+JOCC -DCB1 -LD6	8	+JOCC -DCB1 -106K2 11	+JOCC -ETB1 -X6 8	0,75mm²	P242068A91 Circuit diagram +JOCC 240.5B	
9	+JOCC -DCB1 -LD6	9	+JOCC -DCB1 -106K3 14	+JOCC -ETB1 -X6 9	0,75mm²	P242068A91 Circuit diagram +JOCC 240.6B	
10	+JOCC -DCB1 -LD6	10	+JOCC -DCB1 -106K3 11	+JOCC -ETB1 -X6 10	0,75mm²	P242068A91 Circuit diagram +JOCC 240.6B	
11	+JOCC -DCB1 -LD6	11	+JOCC -DCB1 -110K1 14	+JOCC -ETB1 -X6 11	0,75mm²	P242068A91 Circuit diagram +JOCC 240.7B	
12	+JOCC -DCB1 -LD6	12	+JOCC -DCB1 -110K1 11	+JOCC -ETB1 -X6 12	0,75mm²	P242068A91 Circuit diagram +JOCC 240.7B	
13	+JOCC -DCB1 -LD6	13	+JOCC -DCB1 -110K2 14	+JOCC -ETB1 -X6 13	0,75mm²	P242068A91 Circuit diagram +JOCC 240.8B	
14	+JOCC -DCB1 -LD6	14	+JOCC -DCB1 -110K2 11	+JOCC -ETB1 -X6 14	0,75mm²	P242068A91 Circuit diagram +JOCC 240.8B	
15	+JOCC -DCB1 -LD6	15	+JOCC -DCB1 -110K3 14	+JOCC -ETB1 -X6 15	0,75mm²	P242068A91 Circuit diagram +JOCC 240.9B	
16	+JOCC -DCB1 -LD6	16	+JOCC -DCB1 -110K3 11	+JOCC -ETB1 -X6 16	0,75mm²	P242068A91 Circuit diagram +JOCC 240.9B	
17	+JOCC -DCB1 -LD6	17			0,75mm²		
18	+JOCC -DCB1 -LD6	18			0,75mm²		
19	+JOCC -DCB1 -LD6	19			0,75mm²		
20	+JOCC -DCB1 -LD6	20			0,75mm²		
21	+JOCC -DCB1 -LD6	21			0,75mm²		
22	+JOCC -DCB1 -LD6	22			0,75mm²		
23	+JOCC -DCB1 -LD6	23	+JOCC -DCB1 -Xint6 1	+JOCC -ETB1 -XERC 2	0,75mm²	P242068A91 Circuit diagram +JOCC 160.2C	
24	+JOCC -DCB1 -LD6	24	+JOCC -DCB1 -Xint6 2	+JOCC -ETB1 -XERC 4	0,75mm²	P242068A91 Circuit diagram +JOCC 160.3C	

Index	Revision	Date	name				
3	Final as built	19-3-2025	M.Besseling	Drawn:	31-10-2024	elshofjo	
2	Final for production	22-11-2024	besselingmi	Engineer:	19-9-2024	besselingmi	
1	For approval	13-11-2024	besselingmi	Approved:			
				Changed:			

KANON LOADING EQUIPMENT B.V.

Ref: P242068, B242352 Quote:

Order: 2011280786 Item: 001000

KANON LOADING EQUIPMENT

www.kanon.nl

Electromach BV
Jan Tinbergenstraat 193
7559 SP Hengelo
The Netherlands
US

Conductor bushings connection report

Int. Revision :	P242068A91
Drawing No.: 2011280786-001000-24	+JOCC-DCB1-LD6
	Scale: 1 mm : 1 mm / A3
Refer to protection notice ISO 16016	Sheet: 274 page 1 / 1

Conductor bushings connection report

Row	▲ Part of	Desi…	Destination 1	Destination 2	Wire size / gauge	Circuit Diagram Reference	Associated Potential/…
1	+JOCC -DCB1 -LD11	1	+JOCC -DCB1 -112F1 2	+JOCC -ETB1 -XLA1 1	0,75mm²	P242068A91 Circuit diagram +JOCC 112.1C	
2	+JOCC -DCB1 -LD11	2	+JOCC -DCB1 -112F2 2	+JOCC -ETB1 -XLA1 2	0,75mm²	P242068A91 Circuit diagram +JOCC 112.2C	
3	+JOCC -DCB1 -LD11	3	+JOCC -DCB1 -112F3 2	+JOCC -ETB1 -XLA1 3	0,75mm²	P242068A91 Circuit diagram +JOCC 112.3C	
4	+JOCC -DCB1 -LD11	4	+JOCC -DCB1 -112F4 2	+JOCC -ETB1 -XLA1 4	0,75mm²	P242068A91 Circuit diagram +JOCC 112.4C	
5	+JOCC -DCB1 -LD11	5	+JOCC -DCB1 -112F5 2	+JOCC -ETB1 -XLA1 5	0,75mm²	P242068A91 Circuit diagram +JOCC 112.5C	
6	+JOCC -DCB1 -LD11	6	+JOCC -DCB1 -112F6 2	+JOCC -ETB1 -XLA1 6	0,75mm²	P242068A91 Circuit diagram +JOCC 112.6C	
7	+JOCC -DCB1 -LD11	7	+JOCC -DCB1 -112F7 2	+JOCC -ETB1 -XLA1 7	0,75mm²	P242068A91 Circuit diagram +JOCC 112.7C	
8	+JOCC -DCB1 -LD11	8	+JOCC -DCB1 -112F8 2	+JOCC -ETB1 -XLA1 8	0,75mm²	P242068A91 Circuit diagram +JOCC 112.8C	
9	+JOCC -DCB1 -LD11	9	+JOCC -DCB1 -163K1 14	+JOCC -ETB1 -XLA1 9	0,75mm²	P242068A91 Circuit diagram +JOCC 190.1C	
10	+JOCC -DCB1 -LD11	10			0,75mm²		
11	+JOCC -DCB1 -LD11	11	+JOCC -DCB1 -163K2 LO	+JOCC -ETB1 -XLA1 11	0,75mm²	P242068A91 Circuit diagram +JOCC 190.3C	
12	+JOCC -DCB1 -LD11	12	+JOCC -DCB1 -163K2 N	+JOCC -ETB1 -XLA1 23	0,75mm²	P242068A91 Circuit diagram +JOCC 190.3C	
13	+JOCC -DCB1 -LD11	13	+JOCC -DCB1 -190F4 2	+JOCC -ETB1 -XLA1 13	0,75mm²	P242068A91 Circuit diagram +JOCC 190.4C	
14	+JOCC -DCB1 -LD11	14	+JOCC -DCB1 -190F5 2	+JOCC -ETB1 -XLA1 14	0,75mm²	P242068A91 Circuit diagram +JOCC 190.5C	
15	+JOCC -DCB1 -LD11	15	+JOCC -DCB1 -190F6 2	+JOCC -ETB1 -XLA1 15	0,75mm²	P242068A91 Circuit diagram +JOCC 190.6C	
16	+JOCC -DCB1 -LD11	16	+JOCC -DCB1 -163K3 14	+JOCC -ETB1 -XLA1 16	0,75mm²	P242068A91 Circuit diagram +JOCC 190.7C	
17	+JOCC -DCB1 -LD11	17	+JOCC -DCB1 -163K4 14	+JOCC -ETB1 -XLA1 17	0,75mm²	P242068A91 Circuit diagram +JOCC 190.8C	
18	+JOCC -DCB1 -LD11	18	+JOCC -DCB1 -XintN' 5	+JOCC -ETB1 -XLA1 18	0,75mm²	P242068A91 Circuit diagram +JOCC 112.1E	+JOCC -DCB1 78F1_N
19	+JOCC -DCB1 -LD11	19			0,75mm²		
20	+JOCC -DCB1 -LD11	20	+JOCC -DCB1 -100K3 11	+JOCC -ETB1 -X018 1	0,75mm²	P242068A91 Circuit diagram +JOCC 180.1B	
21	+JOCC -DCB1 -LD11	21		+JOCC -ETB1 -X018 2	0,75mm²	P242068A91 Circuit diagram +JOCC 180.1B	+JOCC -DCB1 78F3_N
22	+JOCC -DCB1 -LD11	22	+JOCC -DCB1 -100K4 11	+JOCC -ETB1 -X018 3	0,75mm²	P242068A91 Circuit diagram +JOCC 180.3B	
23	+JOCC -DCB1 -LD11	23			0,75mm²		
24	+JOCC -DCB1 -LD11	24			0,75mm²		

Index	Revision	Date	name
3	Final as built	19-3-2025	M.Besseling
2	Final for production	22-11-2024	besselingmi
1	For approval	13-11-2024	besselingmi

Drawn:	31-10-2024	elshofjo	
Engineer:	19-9-2024	besselingmi	
Approved:			
Changed:			

KANON LOADING EQUIPMENT B.V.

Ref:	P242068, B242352	Quote:	
Order:	2011280786	Item:	001000

KANON LOADING EQUIPMENT
www.kanon.nl

Electromach BV
Jan Tinbergenstraat 193
7559 SP Hengelo
The Netherlands
US

Conductor bushings connection report

Int. Revision :	P242068A91
Drawing No.: 2011280786-001000-24	+JOCC-DCB1-LD11
Refer to protection notice ISO 16016	Scale: 1 mm : 1 mm / A3
	Sheet: 275 page 1 / 1

Conductor bushings connection report

Row	▲ Part of	Desi…	Destination 1	Destination 2	Wire size / gauge	Circuit Diagram Reference	Associated Potential/…
1	+JOCC -DCB1 -LD12	1	+JOCC -DCB1 -114F1 2	+JOCC -ETB1 -XLA2 1	0,75mm²	P242068A91 Circuit diagram +JOCC 114.1C	
2	+JOCC -DCB1 -LD12	2	+JOCC -DCB1 -114F2 2	+JOCC -ETB1 -XLA2 2	0,75mm²	P242068A91 Circuit diagram +JOCC 114.2C	
3	+JOCC -DCB1 -LD12	3	+JOCC -DCB1 -114F3 2	+JOCC -ETB1 -XLA2 3	0,75mm²	P242068A91 Circuit diagram +JOCC 114.3C	
4	+JOCC -DCB1 -LD12	4	+JOCC -DCB1 -114F4 2	+JOCC -ETB1 -XLA2 4	0,75mm²	P242068A91 Circuit diagram +JOCC 114.4C	
5	+JOCC -DCB1 -LD12	5	+JOCC -DCB1 -114F5 2	+JOCC -ETB1 -XLA2 5	0,75mm²	P242068A91 Circuit diagram +JOCC 114.5C	
6	+JOCC -DCB1 -LD12	6	+JOCC -DCB1 -114F6 2	+JOCC -ETB1 -XLA2 6	0,75mm²	P242068A91 Circuit diagram +JOCC 114.6C	
7	+JOCC -DCB1 -LD12	7	+JOCC -DCB1 -114F7 2	+JOCC -ETB1 -XLA2 7	0,75mm²	P242068A91 Circuit diagram +JOCC 114.7C	
8	+JOCC -DCB1 -LD12	8	+JOCC -DCB1 -114F8 2	+JOCC -ETB1 -XLA2 8	0,75mm²	P242068A91 Circuit diagram +JOCC 114.8C	
9	+JOCC -DCB1 -LD12	9	+JOCC -DCB1 -169K1 14	+JOCC -ETB1 -XLA2 9	0,75mm²	P242068A91 Circuit diagram +JOCC 195.1C	
10	+JOCC -DCB1 -LD12	10			0,75mm²		
11	+JOCC -DCB1 -LD12	11	+JOCC -DCB1 -169K2 LO	+JOCC -ETB1 -XLA2 11	0,75mm²	P242068A91 Circuit diagram +JOCC 195.3C	
12	+JOCC -DCB1 -LD12	12	+JOCC -DCB1 -169K2 N	+JOCC -ETB1 -XLA2 23	0,75mm²	P242068A91 Circuit diagram +JOCC 195.3C	
13	+JOCC -DCB1 -LD12	13	+JOCC -DCB1 -195F4 2	+JOCC -ETB1 -XLA2 13	0,75mm²	P242068A91 Circuit diagram +JOCC 195.4C	
14	+JOCC -DCB1 -LD12	14	+JOCC -DCB1 -195F5 2	+JOCC -ETB1 -XLA2 14	0,75mm²	P242068A91 Circuit diagram +JOCC 195.5C	
15	+JOCC -DCB1 -LD12	15	+JOCC -DCB1 -195F6 2	+JOCC -ETB1 -XLA2 15	0,75mm²	P242068A91 Circuit diagram +JOCC 195.6C	
16	+JOCC -DCB1 -LD12	16	+JOCC -DCB1 -169K3 14	+JOCC -ETB1 -XLA2 16	0,75mm²	P242068A91 Circuit diagram +JOCC 195.7C	
17	+JOCC -DCB1 -LD12	17	+JOCC -DCB1 -169K4 14	+JOCC -ETB1 -XLA2 17	0,75mm²	P242068A91 Circuit diagram +JOCC 195.8C	
18	+JOCC -DCB1 -LD12	18	+JOCC -DCB1 -XintN' 6	+JOCC -ETB1 -XLA2 18	0,75mm²	P242068A91 Circuit diagram +JOCC 114.1E	+JOCC -DCB1 78F2_N
19	+JOCC -DCB1 -LD12	19			0,75mm²		
20	+JOCC -DCB1 -LD12	20			0,75mm²		
21	+JOCC -DCB1 -LD12	21			0,75mm²		
22	+JOCC -DCB1 -LD12	22			0,75mm²		
23	+JOCC -DCB1 -LD12	23			0,75mm²		
24	+JOCC -DCB1 -LD12	24			0,75mm²		

Index	Revision	Date	name			
3	Final as built	19-3-2025	M.Besseling	Drawn:	31-10-2024	elshofjo
2	Final for production	22-11-2024	besselingmi	Engineer:	19-9-2024	besselingmi
1	For approval	13-11-2024	besselingmi	Approved:		
				Changed:		

KANON LOADING EQUIPMENT B.V.

Ref: P242068, B242352 Quote:
Order: 2011280786 Item: 001000

KANON LOADING EQUIPMENT
www.kanon.nl

Electromach BV
Jan Tinbergenstraat 193
7559 SP Hengelo
The Netherlands
US

Conductor bushings connection report

Int. Revision :	P242068A91
Drawing No.: 2011280786-001000-24	+JOCC-DCB1-LD12
	Scale: 1 mm : 1 mm / A3
Refer to protection notice ISO 16016	Sheet: 276 page 1 / 1

Conductor bushings connection report

Row	▲ Part of	Desi…	Destination 1	Destination 2	Wire size / gauge	Circuit Diagram Reference	Associated Potential/…
1	+JOCC -DCB1 -LD13	1	+JOCC -DCB1 -Xint2 2,3 2	+JOCC -ETB1 -XYLA1 1	0,75mm²	P242068A91 Circuit diagram +JOCC 191.1C	
2	+JOCC -DCB1 -LD13	2			0,75mm²		
3	+JOCC -DCB1 -LD13	3	+JOCC -DCB1 -Xint2 4,5 4	+JOCC -ETB1 -XYLA1 3	0,75mm²	P242068A91 Circuit diagram +JOCC 191.3C	
4	+JOCC -DCB1 -LD13	4			0,75mm²		
5	+JOCC -DCB1 -LD13	5			0,75mm²		
6	+JOCC -DCB1 -LD13	6			0,75mm²		
7	+JOCC -DCB1 -LD13	7	+JOCC -DCB1 -Xint- 5	+JOCC -ETB1 -XYLA1 7	0,75mm²	P242068A91 Circuit diagram +JOCC 191.1E	+JOCC -DCB1 82F1-…
8	+JOCC -DCB1 -LD13	8			0,75mm²		
9	+JOCC -DCB1 -LD13	9			0,75mm²		
10	+JOCC -DCB1 -LD13	10			0,75mm²		
11	+JOCC -DCB1 -LD13	11			0,75mm²		
12	+JOCC -DCB1 -LD13	12			0,75mm²		
13	+JOCC -DCB1 -LD13	13	+JOCC -DCB1 -Xint3 2,3 2	+JOCC -ETB1 -XYLA2 1	0,75mm²	P242068A91 Circuit diagram +JOCC 196.1C	
14	+JOCC -DCB1 -LD13	14			0,75mm²		
15	+JOCC -DCB1 -LD13	15	+JOCC -DCB1 -Xint3 4,5 4	+JOCC -ETB1 -XYLA2 3	0,75mm²	P242068A91 Circuit diagram +JOCC 196.3C	
16	+JOCC -DCB1 -LD13	16			0,75mm²		
17	+JOCC -DCB1 -LD13	17			0,75mm²		
18	+JOCC -DCB1 -LD13	18			0,75mm²		
19	+JOCC -DCB1 -LD13	19	+JOCC -DCB1 -Xint- 6	+JOCC -ETB1 -XYLA2 7	0,75mm²	P242068A91 Circuit diagram +JOCC 196.1E	+JOCC -DCB1 82F2-…
20	+JOCC -DCB1 -LD13	20			0,75mm²		
21	+JOCC -DCB1 -LD13	21			0,75mm²		
22	+JOCC -DCB1 -LD13	22			0,75mm²		
23	+JOCC -DCB1 -LD13	23			0,75mm²		
24	+JOCC -DCB1 -LD13	24			0,75mm²		

Index	Revision	Date	name				
3	Final as built	19-3-2025	M.Besseling	Drawn:	31-10-2024	elshofjo	
2	Final for production	22-11-2024	besselingmi	Engineer:	19-9-2024	besselingmi	
1	For approval	13-11-2024	besselingmi	Approved:			
				Changed:			

KANON LOADING EQUIPMENT B.V.

Ref: P242068, B242352 Quote:
Order: 2011280786 Item: 001000

KANON LOADING EQUIPMENT
www.kanon.nl

Electromach BV
Jan Tinbergenstraat 193
7559 SP Hengelo
The Netherlands
US

Conductor bushings connection report

Int. Revision :	P242068A91
Drawing No.: 2011280786-001000-24	+JOCC-DCB1-LD13
	Scale: 1 mm : 1 mm / A3
Refer to protection notice ISO 16016	Sheet: 277 page 1 / 1

Conductor bushings connection report

Row	▲ Part of	Desi…	Destination 1	Destination 2	Wire size / gauge	Circuit Diagram Reference	Associated Potential/…
1	+JOCC -DCB2 -LD19	1	+JOCC -DCB2 -94U2 IN 8 IN 8	+JOCC -ETB1 -X019 1	0,75mm²	P242068A91 Circuit diagram +JOCC 135.1D	
2	+JOCC -DCB2 -LD19	2	+JOCC -DCB2 -94U2 IN 9 IN 9	+JOCC -ETB1 -X019 2	0,75mm²	P242068A91 Circuit diagram +JOCC 135.2D	
3	+JOCC -DCB2 -LD19	3	+JOCC -DCB2 -94U2 IN 10 IN 10	+JOCC -ETB1 -X019 3	0,75mm²	P242068A91 Circuit diagram +JOCC 135.3D	
4	+JOCC -DCB2 -LD19	4	+JOCC -DCB2 -94U2 IN 11 IN 11	+JOCC -ETB1 -X019 4	0,75mm²	P242068A91 Circuit diagram +JOCC 135.4D	
5	+JOCC -DCB2 -LD19	5	+JOCC -DCB2 -94U2 IN 12 IN 12	+JOCC -ETB1 -X019 5	0,75mm²	P242068A91 Circuit diagram +JOCC 135.5D	
6	+JOCC -DCB2 -LD19	6	+JOCC -DCB2 -94U2 IN 13 IN 13	+JOCC -ETB1 -X019 6	0,75mm²	P242068A91 Circuit diagram +JOCC 135.6D	
7	+JOCC -DCB2 -LD19	7	+JOCC -DCB2 -94U2 IN 14 IN 14	+JOCC -ETB1 -X019 7	0,75mm²	P242068A91 Circuit diagram +JOCC 135.7D	
8	+JOCC -DCB2 -LD19	8	+JOCC -DCB2 -94U2 IN 15 IN 15	+JOCC -ETB1 -X019 8	0,75mm²	P242068A91 Circuit diagram +JOCC 135.8D	
9	+JOCC -DCB2 -LD19	9	+JOCC -DCB2 -94U2 IN 16 IN 16	+JOCC -ETB1 -X019 9	0,75mm²	P242068A91 Circuit diagram +JOCC 136.1D	
10	+JOCC -DCB2 -LD19	10	+JOCC -DCB2 -94U2 IN 17 IN 17	+JOCC -ETB1 -X019 10	0,75mm²	P242068A91 Circuit diagram +JOCC 136.2D	
11	+JOCC -DCB2 -LD19	11	+JOCC -DCB2 -94U2 IN 18 IN 18	+JOCC -ETB1 -X019 11	0,75mm²	P242068A91 Circuit diagram +JOCC 136.3D	
12	+JOCC -DCB2 -LD19	12	+JOCC -DCB2 -94U2 IN 19 IN 19	+JOCC -ETB1 -X019 12	0,75mm²	P242068A91 Circuit diagram +JOCC 136.4D	
13	+JOCC -DCB2 -LD19	13	+JOCC -DCB2 -94U2 IN 20 IN 20	+JOCC -ETB1 -X019 13	0,75mm²	P242068A91 Circuit diagram +JOCC 136.5D	
14	+JOCC -DCB2 -LD19	14	+JOCC -DCB2 -94U2 IN 21 IN 21	+JOCC -ETB1 -X019 14	0,75mm²	P242068A91 Circuit diagram +JOCC 136.6D	
15	+JOCC -DCB2 -LD19	15	+JOCC -DCB2 -94U2 IN 22 IN 22	+JOCC -ETB1 -X019 15	0,75mm²	P242068A91 Circuit diagram +JOCC 136.7D	
16	+JOCC -DCB2 -LD19	16	+JOCC -DCB2 -94U2 IN 23 IN 23	+JOCC -ETB1 -X019 16	0,75mm²	P242068A91 Circuit diagram +JOCC 136.8D	
17	+JOCC -DCB2 -LD19	17			0,75mm²		
18	+JOCC -DCB2 -LD19	18			0,75mm²		
19	+JOCC -DCB2 -LD19	19	+JOCC -DCB2 -Xint10 2	+JOCC -ETB1 -XERC 1	0,75mm²	P242068A91 Circuit diagram +JOCC 86.1C	+JOCC -ETB1 86F2+…
20	+JOCC -DCB2 -LD19	20			0,75mm²		
21	+JOCC -DCB2 -LD19	21			0,75mm²		
22	+JOCC -DCB2 -LD19	22	+JOCC -DCB2 -Xint10 1	+JOCC -ETB1 -X019 22	0,75mm²	P242068A91 Circuit diagram +JOCC 86.5C	
23	+JOCC -DCB2 -LD19	23	+JOCC -DCB2 -86F5 2	+JOCC -ETB1 -X019 23	0,75mm²	P242068A91 Circuit diagram +JOCC 86.5C	
24	+JOCC -DCB2 -LD19	24	+JOCC -DCB2 -Xint- 2	+JOCC -ETB1 -X019 24	0,75mm²	P242068A91 Circuit diagram +JOCC 86.5C	

Index	Revision	Date	name				
3	Final as built	19-3-2025	M.Besseling	Drawn:	31-10-2024	elshofjo	
2	Final for production	22-11-2024	besselingmi	Engineer:	19-9-2024	besselingmi	
1	For approval	13-11-2024	besselingmi	Approved:			
				Changed:			

KANON LOADING EQUIPMENT B.V.

Ref: P242068, B242352 Quote:

Order: 2011280786 Item: 001000

KANON LOADING EQUIPMENT

www.kanon.nl

Electromach BV
Jan Tinbergenstraat 193
7559 SP Hengelo
The Netherlands
US

Conductor bushings connection report

Int. Revision : P242068A91

Drawing No.: +JOCC-DCB2-LD19

2011280786-001000-24 Scale: 1 mm : 1 mm / A3

Refer to protection notice ISO 16016 Sheet: 278 page 1 / 1

Conductor bushings connection report

Row	▲ Part of	Desi…	Destination 1	Destination 2	Wire size / gauge	Circuit Diagram Reference	Associated Potential/…
1	+JOCC -DCB2 -LD21	1	+JOCC -DCB2 -210U1 10+	+JOCC -ETB2 -XiLA1 19	0,75mm²	P242068A91 Circuit diagram +JOCC 210.1E	+JETTY W014:1
2	+JOCC -DCB2 -LD21	2	+JOCC -DCB2 -210U1 11-	+JOCC -ETB2 -XiLA1 20	0,75mm²	P242068A91 Circuit diagram +JOCC 210.2E	+JETTY W014:2
3	+JOCC -DCB2 -LD21	3	+JOCC -DCB2 -210U1 12+	+JOCC -ETB2 -XiLA1 21	0,75mm²	P242068A91 Circuit diagram +JOCC 210.2E	+JETTY W014:3
4	+JOCC -DCB2 -LD21	4	+JOCC -DCB2 -210U1 13-	+JOCC -ETB2 -XiLA1 22	0,75mm²	P242068A91 Circuit diagram +JOCC 210.2E	+JETTY W014:4
5	+JOCC -DCB2 -LD21	5	+JOCC -DCB2 -210U4 10+	+JOCC -ETB2 -XiLA1 25	0,75mm²	P242068A91 Circuit diagram +JOCC 210.4E	+JETTY W014:5
6	+JOCC -DCB2 -LD21	6	+JOCC -DCB2 -210U4 11-	+JOCC -ETB2 -XiLA1 26	0,75mm²	P242068A91 Circuit diagram +JOCC 210.4E	+JETTY W014:6
7	+JOCC -DCB2 -LD21	7	+JOCC -DCB2 -210U4 12+	+JOCC -ETB2 -XiLA1 27	0,75mm²	P242068A91 Circuit diagram +JOCC 210.5E	+JETTY W014:7
8	+JOCC -DCB2 -LD21	8	+JOCC -DCB2 -210U4 13-	+JOCC -ETB2 -XiLA1 28	0,75mm²	P242068A91 Circuit diagram +JOCC 210.5E	+JETTY W014:8
9	+JOCC -DCB2 -LD21	9	+JOCC -DCB2 -210U6 10+	+JOCC -ETB2 -XiLA1 29	0,75mm²	P242068A91 Circuit diagram +JOCC 210.7E	+JETTY W014:9
10	+JOCC -DCB2 -LD21	10	+JOCC -DCB2 -210U6 11-	+JOCC -ETB2 -XiLA1 30	0,75mm²	P242068A91 Circuit diagram +JOCC 210.7E	+JETTY W014:10
11	+JOCC -DCB2 -LD21	11	+JOCC -DCB2 -210U6 12+	+JOCC -ETB2 -XiLA1 31	0,75mm²	P242068A91 Circuit diagram +JOCC 210.8E	+JETTY W014:11
12	+JOCC -DCB2 -LD21	12	+JOCC -DCB2 -210U6 13-	+JOCC -ETB2 -XiLA1 32	0,75mm²	P242068A91 Circuit diagram +JOCC 210.8E	+JETTY W014:12
13	+JOCC -DCB2 -LD21	13	+JOCC -DCB2 -211U1 10+	+JOCC -ETB2 -XiLA1 33	0,75mm²	P242068A91 Circuit diagram +JOCC 211.1E	
14	+JOCC -DCB2 -LD21	14	+JOCC -DCB2 -211U1 11-	+JOCC -ETB2 -XiLA1 34	0,75mm²	P242068A91 Circuit diagram +JOCC 211.2E	
15	+JOCC -DCB2 -LD21	15	+JOCC -DCB2 -211U1 12+	+JOCC -ETB2 -XiLA1 35	0,75mm²	P242068A91 Circuit diagram +JOCC 211.2E	
16	+JOCC -DCB2 -LD21	16	+JOCC -DCB2 -211U1 13-	+JOCC -ETB2 -XiLA1 36	0,75mm²	P242068A91 Circuit diagram +JOCC 211.2E	
17	+JOCC -DCB2 -LD21	17	+JOCC -DCB2 -211U4 10+	+JOCC -ETB2 -XiLA1 37	0,75mm²	P242068A91 Circuit diagram +JOCC 211.4E	
18	+JOCC -DCB2 -LD21	18	+JOCC -DCB2 -211U4 11-	+JOCC -ETB2 -XiLA1 38	0,75mm²	P242068A91 Circuit diagram +JOCC 211.4E	
19	+JOCC -DCB2 -LD21	19	+JOCC -DCB2 -211U4 12+	+JOCC -ETB2 -XiLA1 39	0,75mm²	P242068A91 Circuit diagram +JOCC 211.5E	
20	+JOCC -DCB2 -LD21	20	+JOCC -DCB2 -211U4 13-	+JOCC -ETB2 -XiLA1 40	0,75mm²	P242068A91 Circuit diagram +JOCC 211.5E	
21	+JOCC -DCB2 -LD21	21	+JOCC -DCB2 -211U6 10+	+JOCC -ETB2 -XiLA1 47	0,75mm²	P242068A91 Circuit diagram +JOCC 211.7E	
22	+JOCC -DCB2 -LD21	22	+JOCC -DCB2 -211U6 11-	+JOCC -ETB2 -XiLA1 48	0,75mm²	P242068A91 Circuit diagram +JOCC 211.7E	
23	+JOCC -DCB2 -LD21	23	+JOCC -DCB2 -212U1 10+	+JOCC -ETB2 -XiLA1 1	0,75mm²	P242068A91 Circuit diagram +JOCC 212.1E	
24	+JOCC -DCB2 -LD21	24	+JOCC -DCB2 -212U1 11-	+JOCC -ETB2 -XiLA1 2	0,75mm²	P242068A91 Circuit diagram +JOCC 212.2E	
25	+JOCC -DCB2 -LD21	25	+JOCC -DCB2 -212U1 12+	+JOCC -ETB2 -XiLA1 45	0,75mm²	P242068A91 Circuit diagram +JOCC 212.2E	
26	+JOCC -DCB2 -LD21	26	+JOCC -DCB2 -212U1 13-	+JOCC -ETB2 -XiLA1 46	0,75mm²	P242068A91 Circuit diagram +JOCC 212.2E	
27	+JOCC -DCB2 -LD21	27	+JOCC -DCB2 -212U4 10+	+JOCC -ETB2 -XiLA1 3	0,75mm²	P242068A91 Circuit diagram +JOCC 212.4E	
28	+JOCC -DCB2 -LD21	28	+JOCC -DCB2 -212U4 11-	+JOCC -ETB2 -XiLA1 4	0,75mm²	P242068A91 Circuit diagram +JOCC 212.4E	
29	+JOCC -DCB2 -LD21	29	+JOCC -DCB2 -212U4 12+	+JOCC -ETB2 -XiLA1 13	0,75mm²	P242068A91 Circuit diagram +JOCC 212.5E	
30	+JOCC -DCB2 -LD21	30	+JOCC -DCB2 -212U4 13-	+JOCC -ETB2 -XiLA1 14	0,75mm²	P242068A91 Circuit diagram +JOCC 212.5E	
31	+JOCC -DCB2 -LD21	31	+JOCC -DCB2 -212U6 10+	+JOCC -ETB2 -XiLA1 5	0,75mm²	P242068A91 Circuit diagram +JOCC 212.7E	
32	+JOCC -DCB2 -LD21	32	+JOCC -DCB2 -212U6 11-	+JOCC -ETB2 -XiLA1 6	0,75mm²	P242068A91 Circuit diagram +JOCC 212.7E	
33	+JOCC -DCB2 -LD21	33	+JOCC -DCB2 -212U6 12+	+JOCC -ETB2 -XiLA1 15	0,75mm²	P242068A91 Circuit diagram +JOCC 212.8E	
34	+JOCC -DCB2 -LD21	34	+JOCC -DCB2 -212U6 13-	+JOCC -ETB2 -XiLA1 16	0,75mm²	P242068A91 Circuit diagram +JOCC 212.8E	
35	+JOCC -DCB2 -LD21	35	+JOCC -DCB2 -213U1 10+	+JOCC -ETB2 -XiLA1 9	0,75mm²	P242068A91 Circuit diagram +JOCC 213.1E	
36	+JOCC -DCB2 -LD21	36	+JOCC -DCB2 -213U1 11-	+JOCC -ETB2 -XiLA1 10	0,75mm²	P242068A91 Circuit diagram +JOCC 213.2E	
37	+JOCC -DCB2 -LD21	37	+JOCC -DCB2 -213U1 12+	+JOCC -ETB2 -XiLA1 11	0,75mm²	P242068A91 Circuit diagram +JOCC 213.2E	
38	+JOCC -DCB2 -LD21	38	+JOCC -DCB2 -213U1 13-	+JOCC -ETB2 -XiLA1 12	0,75mm²	P242068A91 Circuit diagram +JOCC 213.2E	
39	+JOCC -DCB2 -LD21	39	+JOCC -DCB2 -213U4 10+	+JOCC -ETB2 -XiLA1 23	0,75mm²	P242068A91 Circuit diagram +JOCC 213.4E	

Index	Revision	Date	name				
3	Final as built	19-3-2025	M.Besseling	Drawn:	31-10-2024	elshofjo	
2	Final for production	22-11-2024	besselingmi	Engineer:	19-9-2024	besselingmi	
1	For approval	13-11-2024	besselingmi	Approved:			
				Changed:			

KANON LOADING EQUIPMENT B.V.

Ref: P242068, B242352 Quote:
Order: 2011280786 Item: 001000

KANON LOADING EQUIPMENT
www.kanon.nl

Electromach BV
Jan Tinbergenstraat 193
7559 SP Hengelo
The Netherlands
US

Conductor bushings connection report

Int. Revision :	P242068A91
Drawing No.: 2011280786-001000-24	+JOCC-DCB2-LD21
Refer to protection notice ISO 16016	Scale: 1 mm : 1 mm / A3
	Sheet: 279 page 1 / 2

Conductor bushings connection report

Row	▲ Part of	Desi…	Destination 1	Destination 2	Wire size / gauge	Circuit Diagram Reference	Associated Potential/…
40	+JOCC -DCB2 -LD21	40	+JOCC -DCB2 -213U4 11-	+JOCC -ETB2 -XiLA1 24	0,75mm²	P242068A91 Circuit diagram +JOCC 213.4E	
41	+JOCC -DCB2 -LD21	41			0,75mm²		
42	+JOCC -DCB2 -LD21	42			0,75mm²		
43	+JOCC -DCB2 -LD21	43			0,75mm²		
44	+JOCC -DCB2 -LD21	44			0,75mm²		
45	+JOCC -DCB2 -LD21	45	+JOCC -DCB2 -146U0 10	+JOCC -ETB2 -XiLA1 49	0,75mm²	P242068A91 Circuit diagram +JOCC 146.1C	
46	+JOCC -DCB2 -LD21	46	+JOCC -DCB2 -146U0 11	+JOCC -ETB2 -XiLA1 50	0,75mm²	P242068A91 Circuit diagram +JOCC 146.1C	
47	+JOCC -DCB2 -LD21	47	+JOCC -DCB2 -146U0 12	+JOCC -ETB2 -XiLA2 49	0,75mm²	P242068A91 Circuit diagram +JOCC 146.2C	
48	+JOCC -DCB2 -LD21	48	+JOCC -DCB2 -146U0 13	+JOCC -ETB2 -XiLA2 50	0,75mm²	P242068A91 Circuit diagram +JOCC 146.2C	

Index	Revision	Date	name			
3	Final as built	19-3-2025	M.Besseling	Drawn:	31-10-2024	elshofjo
2	Final for production	22-11-2024	besselingmi	Engineer:	19-9-2024	besselingmi
1	For approval	13-11-2024	besselingmi	Approved:		
				Changed:		

KANON LOADING EQUIPMENT B.V.

Ref: P242068, B242352 Quote:
Order: 2011280786 Item: 001000

KANON LOADING EQUIPMENT
www.kanon.nl

Electromach BV
Jan Tinbergenstraat 193
7559 SP Hengelo
The Netherlands
US

Conductor bushings connection report

Int. Revision :	P242068A91
Drawing No.: 2011280786-001000-24	+JOCC-DCB2-LD21
Refer to protection notice ISO 16016	Scale: 1 mm : 1 mm / A3
	Sheet: 279 page 2 / 2

Conductor bushings connection report

Row	▲ Part of	Desi…	Destination 1	Destination 2	Wire size / gauge	Circuit Diagram Reference	Associated Potential/…
1	+JOCC -DCB2 -LD22	1	+JOCC -DCB2 -220U1 10+	+JOCC -ETB2 -XiLA2 19	0,75mm²	P242068A91 Circuit diagram +JOCC 220.1E	+JETTY W014:1
2	+JOCC -DCB2 -LD22	2	+JOCC -DCB2 -220U1 11-	+JOCC -ETB2 -XiLA2 20	0,75mm²	P242068A91 Circuit diagram +JOCC 220.2E	+JETTY W014:2
3	+JOCC -DCB2 -LD22	3	+JOCC -DCB2 -220U1 12+	+JOCC -ETB2 -XiLA2 21	0,75mm²	P242068A91 Circuit diagram +JOCC 220.2E	+JETTY W014:3
4	+JOCC -DCB2 -LD22	4	+JOCC -DCB2 -220U1 13-	+JOCC -ETB2 -XiLA2 22	0,75mm²	P242068A91 Circuit diagram +JOCC 220.2E	+JETTY W014:4
5	+JOCC -DCB2 -LD22	5	+JOCC -DCB2 -220U4 10+	+JOCC -ETB2 -XiLA2 25	0,75mm²	P242068A91 Circuit diagram +JOCC 220.4E	+JETTY W014:5
6	+JOCC -DCB2 -LD22	6	+JOCC -DCB2 -220U4 11-	+JOCC -ETB2 -XiLA2 26	0,75mm²	P242068A91 Circuit diagram +JOCC 220.4E	+JETTY W014:6
7	+JOCC -DCB2 -LD22	7	+JOCC -DCB2 -220U4 12+	+JOCC -ETB2 -XiLA2 27	0,75mm²	P242068A91 Circuit diagram +JOCC 220.5E	+JETTY W014:7
8	+JOCC -DCB2 -LD22	8	+JOCC -DCB2 -220U4 13-	+JOCC -ETB2 -XiLA2 28	0,75mm²	P242068A91 Circuit diagram +JOCC 220.5E	+JETTY W014:8
9	+JOCC -DCB2 -LD22	9	+JOCC -DCB2 -220U6 10+	+JOCC -ETB2 -XiLA2 29	0,75mm²	P242068A91 Circuit diagram +JOCC 220.7E	+JETTY W014:9
10	+JOCC -DCB2 -LD22	10	+JOCC -DCB2 -220U6 11-	+JOCC -ETB2 -XiLA2 30	0,75mm²	P242068A91 Circuit diagram +JOCC 220.7E	+JETTY W014:10
11	+JOCC -DCB2 -LD22	11	+JOCC -DCB2 -220U6 12+	+JOCC -ETB2 -XiLA2 31	0,75mm²	P242068A91 Circuit diagram +JOCC 220.8E	+JETTY W014:11
12	+JOCC -DCB2 -LD22	12	+JOCC -DCB2 -220U6 13-	+JOCC -ETB2 -XiLA2 32	0,75mm²	P242068A91 Circuit diagram +JOCC 220.8E	+JETTY W014:12
13	+JOCC -DCB2 -LD22	13	+JOCC -DCB2 -221U1 10+	+JOCC -ETB2 -XiLA2 33	0,75mm²	P242068A91 Circuit diagram +JOCC 221.1E	
14	+JOCC -DCB2 -LD22	14	+JOCC -DCB2 -221U1 11-	+JOCC -ETB2 -XiLA2 34	0,75mm²	P242068A91 Circuit diagram +JOCC 221.2E	
15	+JOCC -DCB2 -LD22	15	+JOCC -DCB2 -221U1 12+	+JOCC -ETB2 -XiLA2 35	0,75mm²	P242068A91 Circuit diagram +JOCC 221.2E	
16	+JOCC -DCB2 -LD22	16	+JOCC -DCB2 -221U1 13-	+JOCC -ETB2 -XiLA2 36	0,75mm²	P242068A91 Circuit diagram +JOCC 221.2E	
17	+JOCC -DCB2 -LD22	17	+JOCC -DCB2 -221U4 10+	+JOCC -ETB2 -XiLA2 37	0,75mm²	P242068A91 Circuit diagram +JOCC 221.4E	
18	+JOCC -DCB2 -LD22	18	+JOCC -DCB2 -221U4 11-	+JOCC -ETB2 -XiLA2 38	0,75mm²	P242068A91 Circuit diagram +JOCC 221.4E	
19	+JOCC -DCB2 -LD22	19	+JOCC -DCB2 -221U4 12+	+JOCC -ETB2 -XiLA2 39	0,75mm²	P242068A91 Circuit diagram +JOCC 221.5E	
20	+JOCC -DCB2 -LD22	20	+JOCC -DCB2 -221U4 13-	+JOCC -ETB2 -XiLA2 40	0,75mm²	P242068A91 Circuit diagram +JOCC 221.5E	
21	+JOCC -DCB2 -LD22	21	+JOCC -DCB2 -221U6 10+	+JOCC -ETB2 -XiLA2 47	0,75mm²	P242068A91 Circuit diagram +JOCC 221.7E	
22	+JOCC -DCB2 -LD22	22	+JOCC -DCB2 -221U6 11-	+JOCC -ETB2 -XiLA2 48	0,75mm²	P242068A91 Circuit diagram +JOCC 221.7E	
23	+JOCC -DCB2 -LD22	23	+JOCC -DCB2 -222U1 10+	+JOCC -ETB2 -XiLA2 1	0,75mm²	P242068A91 Circuit diagram +JOCC 222.1E	
24	+JOCC -DCB2 -LD22	24	+JOCC -DCB2 -222U1 11-	+JOCC -ETB2 -XiLA2 2	0,75mm²	P242068A91 Circuit diagram +JOCC 222.2E	
25	+JOCC -DCB2 -LD22	25	+JOCC -DCB2 -222U1 12+	+JOCC -ETB2 -XiLA2 45	0,75mm²	P242068A91 Circuit diagram +JOCC 222.2E	
26	+JOCC -DCB2 -LD22	26	+JOCC -DCB2 -222U1 13-	+JOCC -ETB2 -XiLA2 46	0,75mm²	P242068A91 Circuit diagram +JOCC 222.2E	
27	+JOCC -DCB2 -LD22	27	+JOCC -DCB2 -222U4 10+	+JOCC -ETB2 -XiLA2 3	0,75mm²	P242068A91 Circuit diagram +JOCC 222.4E	
28	+JOCC -DCB2 -LD22	28	+JOCC -DCB2 -222U4 11-	+JOCC -ETB2 -XiLA2 4	0,75mm²	P242068A91 Circuit diagram +JOCC 222.4E	
29	+JOCC -DCB2 -LD22	29		+JOCC -ETB2 -XiLA2 13	0,75mm²	P242068A91 Circuit diagram +JOCC 222.5E	
30	+JOCC -DCB2 -LD22	30		+JOCC -ETB2 -XiLA2 14	0,75mm²	P242068A91 Circuit diagram +JOCC 222.5E	
31	+JOCC -DCB2 -LD22	31	+JOCC -DCB2 -222U6 10+	+JOCC -ETB2 -XiLA2 5	0,75mm²	P242068A91 Circuit diagram +JOCC 222.7E	
32	+JOCC -DCB2 -LD22	32	+JOCC -DCB2 -222U6 11-	+JOCC -ETB2 -XiLA2 6	0,75mm²	P242068A91 Circuit diagram +JOCC 222.7E	
33	+JOCC -DCB2 -LD22	33	+JOCC -DCB2 -222U6 12+	+JOCC -ETB2 -XiLA2 15	0,75mm²	P242068A91 Circuit diagram +JOCC 222.8E	
34	+JOCC -DCB2 -LD22	34	+JOCC -DCB2 -222U6 13-	+JOCC -ETB2 -XiLA2 16	0,75mm²	P242068A91 Circuit diagram +JOCC 222.8E	
35	+JOCC -DCB2 -LD22	35	+JOCC -DCB2 -223U1 10+	+JOCC -ETB2 -XiLA2 9	0,75mm²	P242068A91 Circuit diagram +JOCC 223.1E	
36	+JOCC -DCB2 -LD22	36	+JOCC -DCB2 -223U1 11-	+JOCC -ETB2 -XiLA2 10	0,75mm²	P242068A91 Circuit diagram +JOCC 223.2E	
37	+JOCC -DCB2 -LD22	37	+JOCC -DCB2 -223U1 12+	+JOCC -ETB2 -XiLA2 11	0,75mm²	P242068A91 Circuit diagram +JOCC 223.2E	
38	+JOCC -DCB2 -LD22	38	+JOCC -DCB2 -223U1 13-	+JOCC -ETB2 -XiLA2 12	0,75mm²	P242068A91 Circuit diagram +JOCC 223.2E	
39	+JOCC -DCB2 -LD22	39	+JOCC -DCB2 -223U4 10+	+JOCC -ETB2 -XiLA2 23	0,75mm²	P242068A91 Circuit diagram +JOCC 223.4E	

Index	Revision	Date	name				
3	Final as built	19-3-2025	M.Besseling	Drawn:	31-10-2024	elshofjo	
2	Final for production	22-11-2024	besselingmi	Engineer:	19-9-2024	besselingmi	
1	For approval	13-11-2024	besselingmi	Approved:			

KANON LOADING EQUIPMENT B.V.

Ref: P242068, B242352 Quote:
Order: 2011280786 Item: 001000

KANON LOADING EQUIPMENT
www.kanon.nl

Electromach BV
Jan Tinbergenstraat 193
7559 SP Hengelo
The Netherlands
US

Conductor bushings connection report

Int. Revision :	P242068A91
Drawing No.: 2011280786-001000-24	+JOCC-DCB2-LD22
Refer to protection notice ISO 16016	Scale: 1 mm : 1 mm / A3
	Sheet: 280 page 1 / 2

Conductor bushings connection report

Row	▲ Part of	Desi…	Destination 1	Destination 2	Wire size / gauge	Circuit Diagram Reference	Associated Potential/…
40	+JOCC -DCB2 -LD22	40	+JOCC -DCB2 -223U4 11-	+JOCC -ETB2 -XiLA2 24	0,75mm²	P242068A91 Circuit diagram +JOCC 223.4E	
41	+JOCC -DCB2 -LD22	41			0,75mm²		
42	+JOCC -DCB2 -LD22	42			0,75mm²		
43	+JOCC -DCB2 -LD22	43			0,75mm²		
44	+JOCC -DCB2 -LD22	44			0,75mm²		
45	+JOCC -DCB2 -LD22	45			0,75mm²		
46	+JOCC -DCB2 -LD22	46			0,75mm²		
47	+JOCC -DCB2 -LD22	47			0,75mm²		
48	+JOCC -DCB2 -LD22	48			0,75mm²		

Index	Revision	Date	name			
3	Final as built	19-3-2025	M.Besseling	Drawn:	31-10-2024	elshofjo
2	Final for production	22-11-2024	besselingmi	Engineer:	19-9-2024	besselingmi
1	For approval	13-11-2024	besselingmi	Approved:		
				Changed:		

KANON LOADING EQUIPMENT B.V.

Ref: P242068, B242352 Quote:

Order: 2011280786 Item: 001000

KANON LOADING EQUIPMENT

www.kanon.nl

Electromach BV
Jan Tinbergenstraat 193
7559 SP Hengelo
The Netherlands
US

Conductor bushings connection report

Int. Revision :	P242068A91
Drawing No.: 2011280786-001000-24	+JOCC-DCB2-LD22
Refer to protection notice ISO 16016	Scale: 1 mm : 1 mm / A3
	Sheet: 280 page 2 / 2

Conductor bushings connection report

Row	▲ Part of	Desi…	Destination 1	Destination 2	Wire size / gauge	Circuit Diagram Reference	Associated Potential/…
1	+JOCC -DCB2 -LD23	1	+JOCC -DCB2 -215U1 10+	+JOCC -ETB2 -XiYLA1 1	0,75mm²	P242068A91 Circuit diagram +JOCC 215.1E	+JETTY W103:1
2	+JOCC -DCB2 -LD23	2	+JOCC -DCB2 -215U1 11-	+JOCC -ETB2 -XiYLA1 2	0,75mm²	P242068A91 Circuit diagram +JOCC 215.2E	+JETTY W103:2
3	+JOCC -DCB2 -LD23	3	+JOCC -DCB2 -215U1 12+	+JOCC -ETB2 -XiYLA1 3	0,75mm²	P242068A91 Circuit diagram +JOCC 215.2E	+JETTY W103:3
4	+JOCC -DCB2 -LD23	4	+JOCC -DCB2 -215U1 13-	+JOCC -ETB2 -XiYLA1 4	0,75mm²	P242068A91 Circuit diagram +JOCC 215.2E	+JETTY W103:4
5	+JOCC -DCB2 -LD23	5	+JOCC -DCB2 -215U4 10+	+JOCC -ETB2 -XiYLA1 5	0,75mm²	P242068A91 Circuit diagram +JOCC 215.4E	+JETTY W103:5
6	+JOCC -DCB2 -LD23	6	+JOCC -DCB2 -215U4 11-	+JOCC -ETB2 -XiYLA1 6	0,75mm²	P242068A91 Circuit diagram +JOCC 215.4E	+JETTY W103:6
7	+JOCC -DCB2 -LD23	7	+JOCC -DCB2 -215U4 12+	+JOCC -ETB2 -XiYLA1 7	0,75mm²	P242068A91 Circuit diagram +JOCC 215.5E	+JETTY W103:7
8	+JOCC -DCB2 -LD23	8	+JOCC -DCB2 -215U4 13-	+JOCC -ETB2 -XiYLA1 8	0,75mm²	P242068A91 Circuit diagram +JOCC 215.5E	+JETTY W103:8
9	+JOCC -DCB2 -LD23	9	+JOCC -DCB2 -215U6 10+	+JOCC -ETB2 -XiYLA1 9	0,75mm²	P242068A91 Circuit diagram +JOCC 215.7E	+JETTY W103:9
10	+JOCC -DCB2 -LD23	10	+JOCC -DCB2 -215U6 11-	+JOCC -ETB2 -XiYLA1 10	0,75mm²	P242068A91 Circuit diagram +JOCC 215.7E	+JETTY W103:10
11	+JOCC -DCB2 -LD23	11	+JOCC -DCB2 -215U6 12+	+JOCC -ETB2 -XiYLA1 11	0,75mm²	P242068A91 Circuit diagram +JOCC 215.8E	+JETTY W103:11
12	+JOCC -DCB2 -LD23	12	+JOCC -DCB2 -215U6 13-	+JOCC -ETB2 -XiYLA1 12	0,75mm²	P242068A91 Circuit diagram +JOCC 215.8E	+JETTY W103:12
13	+JOCC -DCB2 -LD23	13			0,75mm²		
14	+JOCC -DCB2 -LD23	14			0,75mm²		
15	+JOCC -DCB2 -LD23	15			0,75mm²		
16	+JOCC -DCB2 -LD23	16			0,75mm²		
17	+JOCC -DCB2 -LD23	17			0,75mm²		
18	+JOCC -DCB2 -LD23	18			0,75mm²		
19	+JOCC -DCB2 -LD23	19			0,75mm²		
20	+JOCC -DCB2 -LD23	20			0,75mm²		
21	+JOCC -DCB2 -LD23	21	+JOCC -DCB2 -225U1 10+	+JOCC -ETB2 -XiYLA2 1	0,75mm²	P242068A91 Circuit diagram +JOCC 225.1E	+JETTY W203:1
22	+JOCC -DCB2 -LD23	22	+JOCC -DCB2 -225U1 11-	+JOCC -ETB2 -XiYLA2 2	0,75mm²	P242068A91 Circuit diagram +JOCC 225.2E	+JETTY W203:2
23	+JOCC -DCB2 -LD23	23	+JOCC -DCB2 -225U1 12+	+JOCC -ETB2 -XiYLA2 3	0,75mm²	P242068A91 Circuit diagram +JOCC 225.2E	+JETTY W203:3
24	+JOCC -DCB2 -LD23	24	+JOCC -DCB2 -225U1 13-	+JOCC -ETB2 -XiYLA2 4	0,75mm²	P242068A91 Circuit diagram +JOCC 225.2E	+JETTY W203:4
25	+JOCC -DCB2 -LD23	25	+JOCC -DCB2 -225U4 10+	+JOCC -ETB2 -XiYLA2 5	0,75mm²	P242068A91 Circuit diagram +JOCC 225.4E	+JETTY W203:5
26	+JOCC -DCB2 -LD23	26	+JOCC -DCB2 -225U4 11-	+JOCC -ETB2 -XiYLA2 6	0,75mm²	P242068A91 Circuit diagram +JOCC 225.4E	+JETTY W203:6
27	+JOCC -DCB2 -LD23	27	+JOCC -DCB2 -225U4 12+	+JOCC -ETB2 -XiYLA2 7	0,75mm²	P242068A91 Circuit diagram +JOCC 225.5E	+JETTY W203:7
28	+JOCC -DCB2 -LD23	28	+JOCC -DCB2 -225U4 13-	+JOCC -ETB2 -XiYLA2 8	0,75mm²	P242068A91 Circuit diagram +JOCC 225.5E	+JETTY W203:8
29	+JOCC -DCB2 -LD23	29	+JOCC -DCB2 -225U6 10+	+JOCC -ETB2 -XiYLA2 9	0,75mm²	P242068A91 Circuit diagram +JOCC 225.7E	+JETTY W203:9
30	+JOCC -DCB2 -LD23	30	+JOCC -DCB2 -225U6 11-	+JOCC -ETB2 -XiYLA2 10	0,75mm²	P242068A91 Circuit diagram +JOCC 225.7E	+JETTY W203:10
31	+JOCC -DCB2 -LD23	31	+JOCC -DCB2 -225U6 12+	+JOCC -ETB2 -XiYLA2 11	0,75mm²	P242068A91 Circuit diagram +JOCC 225.8E	+JETTY W203:11
32	+JOCC -DCB2 -LD23	32	+JOCC -DCB2 -225U6 13-	+JOCC -ETB2 -XiYLA2 12	0,75mm²	P242068A91 Circuit diagram +JOCC 225.8E	+JETTY W203:12
33	+JOCC -DCB2 -LD23	33			0,75mm²		
34	+JOCC -DCB2 -LD23	34			0,75mm²		
35	+JOCC -DCB2 -LD23	35			0,75mm²		
36	+JOCC -DCB2 -LD23	36			0,75mm²		
37	+JOCC -DCB2 -LD23	37			0,75mm²		
38	+JOCC -DCB2 -LD23	38			0,75mm²		
39	+JOCC -DCB2 -LD23	39			0,75mm²		

Index	Revision	Date	name				
3	Final as built	19-3-2025	M.Besseling	Drawn:	31-10-2024	elshofjo	
2	Final for production	22-11-2024	besselingmi	Engineer:	19-9-2024	besselingmi	
1	For approval	13-11-2024	besselingmi	Approved:			

KANON LOADING EQUIPMENT B.V.

Ref: P242068, B242352 | Quote:
Order: 2011280786 | Item: 001000

KANON LOADING EQUIPMENT
www.kanon.nl

Electromach BV
Jan Tinbergenstraat 193
7559 SP Hengelo
The Netherlands

Conductor bushings connection report

Int. Revision :	P242068A91
Drawing No.: 2011280786-001000-24	+JOCC-DCB2-LD23
Refer to protection notice ISO 16016	Scale: 1 mm : 1 mm / A3
	Sheet: 281 page 1 / 2

Conductor bushings connection report

Row	▲ Part of	Desi…	Destination 1	Destination 2	Wire size / gauge	Circuit Diagram Reference	Associated Potential/…
40	+JOCC -DCB2 -LD23	40			0,75mm²		
41	+JOCC -DCB2 -LD23	41			0,75mm²		
42	+JOCC -DCB2 -LD23	42			0,75mm²		
43	+JOCC -DCB2 -LD23	43			0,75mm²		
44	+JOCC -DCB2 -LD23	44			0,75mm²		
45	+JOCC -DCB2 -LD23	45			0,75mm²		
46	+JOCC -DCB2 -LD23	46			0,75mm²		
47	+JOCC -DCB2 -LD23	47			0,75mm²		
48	+JOCC -DCB2 -LD23	48			0,75mm²		

Index	Revision	Date	name			
3	Final as built	19-3-2025	M.Besseling	Drawn:	31-10-2024	elshofjo
2	Final for production	22-11-2024	besselingmi	Engineer:	19-9-2024	besselingmi
1	For approval	13-11-2024	besselingmi	Approved:		
				Changed:		

KANON LOADING EQUIPMENT B.V.

Ref: P242068, B242352 Quote:

Order: 2011280786 Item: 001000

KANON LOADING EQUIPMENT

www.kanon.nl

Electromach BV
Jan Tinbergenstraat 193
7559 SP Hengelo
The Netherlands
US

Conductor bushings connection report

Int. Revision :	P242068A91
Drawing No.: 2011280786-001000-24	+JOCC-DCB2-LD23
Refer to protection notice ISO 16016	Scale: 1 mm : 1 mm / A3
	Sheet: 281 page 2 / 2

Conductor bushings connection report

Row	▲ Part of	Desi…	Destination 1	Destination 2	Wire size / gauge	Circuit Diagram Reference	Associated Potential/…
1	+JOCC -DCB2 -LD24	1	+JOCC -DCB2 -200U1 10+	+JOCC -ETB2 -Xi15 1	0,75mm²	P242068A91 Circuit diagram +JOCC 200.1E	
2	+JOCC -DCB2 -LD24	2	+JOCC -DCB2 -200U1 11-	+JOCC -ETB2 -Xi15 2	0,75mm²	P242068A91 Circuit diagram +JOCC 200.2E	
3	+JOCC -DCB2 -LD24	3	+JOCC -DCB2 -200U1 12+	+JOCC -ETB2 -Xi15 3	0,75mm²	P242068A91 Circuit diagram +JOCC 200.2E	
4	+JOCC -DCB2 -LD24	4	+JOCC -DCB2 -200U1 13-	+JOCC -ETB2 -Xi15 4	0,75mm²	P242068A91 Circuit diagram +JOCC 200.2E	
5	+JOCC -DCB2 -LD24	5	+JOCC -DCB2 -200U4 10+	+JOCC -ETB2 -Xi15 5	0,75mm²	P242068A91 Circuit diagram +JOCC 200.4E	+JETTY W015:5
6	+JOCC -DCB2 -LD24	6	+JOCC -DCB2 -200U4 11-	+JOCC -ETB2 -Xi15 6	0,75mm²	P242068A91 Circuit diagram +JOCC 200.5E	+JETTY W015:6
7	+JOCC -DCB2 -LD24	7	+JOCC -DCB2 -200U4 12+	+JOCC -ETB2 -Xi15 7	0,75mm²	P242068A91 Circuit diagram +JOCC 200.5E	+JETTY W015:7
8	+JOCC -DCB2 -LD24	8	+JOCC -DCB2 -200U4 13-	+JOCC -ETB2 -Xi15 8	0,75mm²	P242068A91 Circuit diagram +JOCC 200.5E	+JETTY W015:8
9	+JOCC -DCB2 -LD24	9			0,75mm²		
10	+JOCC -DCB2 -LD24	10			0,75mm²		
11	+JOCC -DCB2 -LD24	11			0,75mm²		
12	+JOCC -DCB2 -LD24	12			0,75mm²		
13	+JOCC -DCB2 -LD24	13			0,75mm²		
14	+JOCC -DCB2 -LD24	14			0,75mm²		
15	+JOCC -DCB2 -LD24	15			0,75mm²		
16	+JOCC -DCB2 -LD24	16			0,75mm²		
17	+JOCC -DCB2 -LD24	17			0,75mm²		
18	+JOCC -DCB2 -LD24	18			0,75mm²		
19	+JOCC -DCB2 -LD24	19			0,75mm²		
20	+JOCC -DCB2 -LD24	20			0,75mm²		
21	+JOCC -DCB2 -LD24	21	+JOCC -DCB2 -205U1 10+	+JOCC -ETB2 -Xi14 1	0,75mm²	P242068A91 Circuit diagram +JOCC 205.1E	+JETTY W014:1
22	+JOCC -DCB2 -LD24	22	+JOCC -DCB2 -205U1 11-	+JOCC -ETB2 -Xi14 2	0,75mm²	P242068A91 Circuit diagram +JOCC 205.2E	+JETTY W014:2
23	+JOCC -DCB2 -LD24	23	+JOCC -DCB2 -205U1 13-	+JOCC -ETB2 -Xi14 3	0,75mm²	P242068A91 Circuit diagram +JOCC 205.2E	+JETTY W014:3
24	+JOCC -DCB2 -LD24	24	+JOCC -DCB2 -205U4 10+	+JOCC -ETB2 -Xi14 4	0,75mm²	P242068A91 Circuit diagram +JOCC 205.4E	+JETTY W014:4
25	+JOCC -DCB2 -LD24	25	+JOCC -DCB2 -205U4 11-	+JOCC -ETB2 -Xi14 5	0,75mm²	P242068A91 Circuit diagram +JOCC 205.4E	+JETTY W014:5
26	+JOCC -DCB2 -LD24	26	+JOCC -DCB2 -205U4 13-	+JOCC -ETB2 -Xi14 6	0,75mm²	P242068A91 Circuit diagram +JOCC 205.5E	+JETTY W014:6
27	+JOCC -DCB2 -LD24	27	+JOCC -DCB2 -205U6 10+	+JOCC -ETB2 -Xi14 7	0,75mm²	P242068A91 Circuit diagram +JOCC 205.7E	+JETTY W014:7
28	+JOCC -DCB2 -LD24	28	+JOCC -DCB2 -205U6 11-	+JOCC -ETB2 -Xi14 8	0,75mm²	P242068A91 Circuit diagram +JOCC 205.7E	+JETTY W014:8
29	+JOCC -DCB2 -LD24	29	+JOCC -DCB2 -205U6 13-	+JOCC -ETB2 -Xi14 9	0,75mm²	P242068A91 Circuit diagram +JOCC 205.8E	+JETTY W014:9
30	+JOCC -DCB2 -LD24	30	+JOCC -DCB2 -206U1 10+	+JOCC -ETB2 -Xi14 10	0,75mm²	P242068A91 Circuit diagram +JOCC 206.1E	+JETTY W014:10
31	+JOCC -DCB2 -LD24	31	+JOCC -DCB2 -206U1 11-	+JOCC -ETB2 -Xi14 11	0,75mm²	P242068A91 Circuit diagram +JOCC 206.2E	+JETTY W014:11
32	+JOCC -DCB2 -LD24	32	+JOCC -DCB2 -206U1 13-	+JOCC -ETB2 -Xi14 12	0,75mm²	P242068A91 Circuit diagram +JOCC 206.2E	+JETTY W014:12
33	+JOCC -DCB2 -LD24	33	+JOCC -DCB2 -206U4 10+	+JOCC -ETB2 -Xi14 13	0,75mm²	P242068A91 Circuit diagram +JOCC 206.4E	+JETTY W014:13
34	+JOCC -DCB2 -LD24	34	+JOCC -DCB2 -206U4 11-	+JOCC -ETB2 -Xi14 14	0,75mm²	P242068A91 Circuit diagram +JOCC 206.4E	+JETTY W014:14
35	+JOCC -DCB2 -LD24	35	+JOCC -DCB2 -206U4 13-	+JOCC -ETB2 -Xi14 15	0,75mm²	P242068A91 Circuit diagram +JOCC 206.5E	+JETTY W014:15
36	+JOCC -DCB2 -LD24	36	+JOCC -DCB2 -206U6 10+	+JOCC -ETB2 -Xi14 16	0,75mm²	P242068A91 Circuit diagram +JOCC 206.7E	+JETTY W014:16
37	+JOCC -DCB2 -LD24	37	+JOCC -DCB2 -206U6 11-	+JOCC -ETB2 -Xi14 17	0,75mm²	P242068A91 Circuit diagram +JOCC 206.7E	+JETTY W014:17
38	+JOCC -DCB2 -LD24	38	+JOCC -DCB2 -206U6 13-	+JOCC -ETB2 -Xi14 18	0,75mm²	P242068A91 Circuit diagram +JOCC 206.8E	+JETTY W014:18
39	+JOCC -DCB2 -LD24	39			0,75mm²		

Index	Revision	Date	name				
3	Final as built	19-3-2025	M.Besseling	Drawn:	31-10-2024	elshofjo	
2	Final for production	22-11-2024	besselingmi	Engineer:	19-9-2024	besselingmi	
1	For approval	13-11-2024	besselingmi	Approved:			

KANON LOADING EQUIPMENT B.V.

Ref: P242068, B242352 | Quote:
Order: 2011280786 | Item: 001000

KANON LOADING EQUIPMENT
www.kanon.nl

Electromach BV
Jan Tinbergenstraat 193
7559 SP Hengelo
The Netherlands
US

Conductor bushings connection report

Int. Revision :	P242068A91
Drawing No.: 2011280786-001000-24	+JOCC-DCB2-LD24
Refer to protection notice ISO 16016	Scale: 1 mm : 1 mm / A3
	Sheet: 282 page 1 / 2

Conductor bushings connection report

Row	▲ Part of	Desi…	Destination 1	Destination 2	Wire size / gauge	Circuit Diagram Reference	Associated Potential/…
40	+JOCC -DCB2 -LD24	40			0,75mm²		
41	+JOCC -DCB2 -LD24	41			0,75mm²		
42	+JOCC -DCB2 -LD24	42			0,75mm²		
43	+JOCC -DCB2 -LD24	43			0,75mm²		
44	+JOCC -DCB2 -LD24	44			0,75mm²		
45	+JOCC -DCB2 -LD24	45			0,75mm²		
46	+JOCC -DCB2 -LD24	46			0,75mm²		
47	+JOCC -DCB2 -LD24	47			0,75mm²		
48	+JOCC -DCB2 -LD24	48			0,75mm²		

Index	Revision	Date	name			
3	Final as built	19-3-2025	M.Besseling	Drawn:	31-10-2024	elshofjo
2	Final for production	22-11-2024	besselingmi	Engineer:	19-9-2024	besselingmi
1	For approval	13-11-2024	besselingmi	Approved:		
				Changed:		

KANON LOADING EQUIPMENT B.V.

Ref: P242068, B242352 Quote:

Order: 2011280786 Item: 001000

KANON LOADING EQUIPMENT

www.kanon.nl

Electromach BV
Jan Tinbergenstraat 193
7559 SP Hengelo
The Netherlands

Conductor bushings connection report

Int. Revision :	P242068A91
Drawing No.: 2011280786-001000-24	+JOCC-DCB2-LD24
Refer to protection notice ISO 16016	Scale: 1 mm : 1 mm / A3
	Sheet: 282 page 2 / 2

Conductor bushings connection report

Row	▲ Part of	Desi…	Destination 1	Destination 2	Wire size / gauge	Circuit Diagram Reference	Associated Potential/…
1	+JOCC -DCB1 -LDETH1	BU	+JOCC -DCB1 -90U3 Port 2.2 6	+JOCC -ECB1 -XETH 4		P242068A91 Circuit diagram +JOCC 90.7E	
2	+JOCC -DCB1 -LDETH1	OG	+JOCC -DCB1 -90U3 Port 2.2 2	+JOCC -ECB1 -XETH 2		P242068A91 Circuit diagram +JOCC 90.6E	
3	+JOCC -DCB1 -LDETH1	SH					
4	+JOCC -DCB1 -LDETH1	WH	+JOCC -DCB1 -90U3 Port 2.2 3	+JOCC -ECB1 -XETH 3		P242068A91 Circuit diagram +JOCC 90.6E	
5	+JOCC -DCB1 -LDETH1	YE	+JOCC -DCB1 -90U3 Port 2.2 1	+JOCC -ECB1 -XETH 1		P242068A91 Circuit diagram +JOCC 90.6E	

Index	Revision	Date	name
2	Final as built	19-3-2025	M.Besseling
1	For approval	13-11-2024	besselingmi

Drawn:	31-10-2024	elshofjo	
Engineer:	19-9-2024	besselingmi	
Approved:			
Changed:			

KANON LOADING EQUIPMENT B.V.

Ref: P242068, B242352 Quote:

Order: 2011280786 Item: 001000

KANON LOADING EQUIPMENT

www.kanon.nl

Electromach BV
Jan Tinbergenstraat 193
7559 SP Hengelo
The Netherlands
US

Conductor bushings connection report

Int. Revision :	P242068A91
Drawing No.: 2011280786-001000-24	+JOCC-DCB1-LDETH1
Refer to protection notice ISO 16016	Scale: 1 mm : 1 mm / A3
	Sheet: 290 page 1 / 1

Conductor bushings connection report

Row	▲ Part of	Desi…	Destination 1	Destination 2	Wire size / gauge	Circuit Diagram Reference	Associated Potential/…
1	+JOCC -DCB2 -LDETH2	BU	+JOCC -DCB2 -93U4 LINK 1 6	+JOCC -ECB1 -XETH 4		P242068A91 Circuit diagram +JOCC 93.2D	+JOCC -ECB1 XETH-4
2	+JOCC -DCB2 -LDETH2	OG	+JOCC -DCB2 -93U4 LINK 1 2	+JOCC -ECB1 -XETH 2		P242068A91 Circuit diagram +JOCC 93.2D	+JOCC -ECB1 XETH-2
3	+JOCC -DCB2 -LDETH2	SH					
4	+JOCC -DCB2 -LDETH2	WH	+JOCC -DCB2 -93U4 LINK 1 3	+JOCC -ECB1 -XETH 3		P242068A91 Circuit diagram +JOCC 93.2D	+JOCC -ECB1 XETH-3
5	+JOCC -DCB2 -LDETH2	YE	+JOCC -DCB2 -93U4 LINK 1 1	+JOCC -ECB1 -XETH 1		P242068A91 Circuit diagram +JOCC 93.1D	+JOCC -ECB1 XETH-1

Index	Revision	Date	name
2	Final as built	19-3-2025	M.Besseling
1	For approval	13-11-2024	besselingmi

Drawn: 31-10-2024 elshofjo
Engineer: 19-9-2024 besselingmi
Approved:
Changed:

KANON LOADING EQUIPMENT B.V.

Ref: P242068, B242352 Quote:
Order: 2011280786 Item: 001000

KANON LOADING EQUIPMENT
www.kanon.nl

Electromach BV
Jan Tinbergenstraat 193
7559 SP Hengelo
The Netherlands
US

Conductor bushings connection report

Int. Revision : P242068A91
Drawing No.: +JOCC-DCB2-LDETH2
2011280786-001000-24
Scale: 1 mm : 1 mm / A3
Refer to protection notice ISO 16016
Sheet: 291 page 1 / 1

Conductor bushings connection report

Row	▲ Part of	Desi…	Destination 1	Destination 2	Wire size / gauge	Circuit Diagram Reference	Associated Potential/…
1	+JOCC -DCB1 -LDETH3	BU	+JOCC -DCB1 -90U3 Port 3.1 6	+JOCC -ETB1 -Xcom 4		P242068A91 Circuit diagram +JOCC 90.1D	
2	+JOCC -DCB1 -LDETH3	OG	+JOCC -DCB1 -90U3 Port 3.1 2	+JOCC -ETB1 -Xcom 2		P242068A91 Circuit diagram +JOCC 90.1D	
3	+JOCC -DCB1 -LDETH3	SH					
4	+JOCC -DCB1 -LDETH3	WH	+JOCC -DCB1 -90U3 Port 3.1 3	+JOCC -ETB1 -Xcom 3		P242068A91 Circuit diagram +JOCC 90.1D	
5	+JOCC -DCB1 -LDETH3	YE	+JOCC -DCB1 -90U3 Port 3.1 1	+JOCC -ETB1 -Xcom 1		P242068A91 Circuit diagram +JOCC 90.0D	

Index	Revision	Date	name
2	Final as built	19-3-2025	M.Besseling
1	For approval	13-11-2024	besselingmi

Drawn:	31-10-2024	elshofjo	
Engineer:	19-9-2024	besselingmi	
Approved:			
Changed:			

KANON LOADING EQUIPMENT B.V.

Ref: P242068, B242352 Quote:

Order: 2011280786 Item: 001000

KANON LOADING EQUIPMENT

www.kanon.nl

Electromach BV
Jan Tinbergenstraat 193
7559 SP Hengelo
The Netherlands
US

Conductor bushings connection report

Int. Revision :	P242068A91
Drawing No.: 2011280786-001000-24	+JOCC-DCB1-LDETH3
Refer to protection notice ISO 16016	Scale: 1 mm : 1 mm / A3
	Sheet: 293 page 1 / 1

Terminal diagram

+JOCC-ETB1-X000

External cable								+JETTY -W000 VG-YMvKas mb 3 x 16 mm²	General remarks		Terminal block : -X000						Number of terminals : 4						Internal cable
									External destination		Terminal number	Wire jumper	Jumper	Terminal type	Terminal number	Cross-reference	Internal destination					
Comment									Device	Pin							Pin	Device					Comment
								1	-PS000	L1	**1**			PT 16 N		/75.0D	14	-ETB1 -75S0					Main switch
								2	-PS000	L2	**2**			PT 16 N		/75.1D	24	-ETB1 -75S0					Main switch
								3	-PS000	L3	**3**			PT 16 N		/75.1D	34	-ETB1 -75S0					Main switch
								S	-PS000	PE	**PE**			PT 16 N PE		/75.1D	-PE-RAIL 1	-ETB1					

Index	Revision	Date	name						
2	Final as built	19-3-2025	M.Besseling	Drawn:	31-10-2024	elshofjo	**KANON LOADING EQUIPMENT B.V.**		
1	For approval	13-11-2024	besselingmi	Engineer:	19-9-2024	besselingmi			
				Approved:			Ref: P242068, B242352	Quote:	
				Changed:			Order: 2011280786	Item: 001000	

KANON LOADING EQUIPMENT
www.kanon.nl

Electromach BV
Jan Tinbergenstraat 193
7559 SP Hengelo
The Netherlands

Terminal diagram

Int. Revision :	P242068A91
Drawing No.: 2011280786-001000-24	+JOCC-ETB1-X000
	Scale: 1 mm : 1 mm / A3
Refer to protection notice ISO 16016	Sheet: 300 page 1 / 1

Terminal diagram

+JOCC-ETB1-X001

External cable									General remarks		Terminal block : -X001						Number of terminals : 3							Internal cable
								+JETTY -W001 VG-YMvKas Dca-s2 3 x 6 mm²	External destination		Terminal number	Wire jumper	Jumper	Terminal type	Terminal number	Cross-reference	Internal destination							
Comment									Device	Pin							Pin	Device						Comment
								1	-PS001	L	**1**			PT 6		/75.7D								
								2	-PS001	N	**2**			PT 6		/75.7D								
								S	-PS001	PE	**PE**			PT 6 PE		/75.7D								

Index	Revision	Date	name
1	Final as built	19-3-2025	M.Besseling

Drawn:	31-10-2024	elshofjo	
Engineer:	19-9-2024	besselingmi	
Approved:			
Changed:			

KANON LOADING EQUIPMENT B.V.

Ref:	P242068, B242352	Quote:	
Order:	2011280786	Item:	001000

KANON LOADING EQUIPMENT

www.kanon.nl

Electromach BV
Jan Tinbergenstraat 193
7559 SP Hengelo
The Netherlands
US

Terminal diagram

Int. Revision :	P242068A91
Drawing No.: 2011280786-001000-24	+JOCC-ETB1-X001
	Scale: 1 mm : 1 mm / A3
Refer to protection notice ISO 16016	Sheet: 301 page 1 / 1

Terminal diagram

+JOCC-ETB1-X016

External cable								+JETTY -W016 VG-YMvKas Dca-s2 3 x 6 mm²	General remarks		Terminal block : -X016						Number of terminals : 4		Schwarz 6mm²					Internal cable
									External destination		Terminal number	Wire jumper	Jumper	Terminal type	Terminal number	Cross-reference	Internal destination							
Comment									Device	Pin							Pin	Device						Comment
PT 6								1	-JB16 -X16	1	**1**			PT 6		/75.3D	2	-DCB1 -89K1	4					
PT 6								2	-JB16 -X16	2	**2**			PT 6		/75.3D	4	-DCB1 -89K1	5					
PT 6								3	-JB16 -X16	3	**3**			PT 6		/75.4D	6	-DCB1 -89K1	6					
PT 6 PE								S	-JB16 -X16	PE	**PE**			PT 6 PE		/75.4D								

Index	Revision	Date	name				
2	Final as built	19-3-2025	M.Besseling	Drawn:	31-10-2024	elshofjo	**KANON LOADING EQUIPMENT B.V.**
1	For approval	13-11-2024	besselingmi	Engineer:	19-9-2024	besselingmi	
				Approved:			Ref: P242068, B242352 Quote:
				Changed:			Order: 2011280786 Item: 001000

KANON LOADING EQUIPMENT

www.kanon.nl

Electromach BV
Jan Tinbergenstraat 193
7559 SP Hengelo
The Netherlands
US

Terminal diagram

Int. Revision :
Drawing No.:
2011280786-001000-24
Refer to protection notice ISO 16016

P242068A91
+JOCC-ETB1-X016
Scale: 1 mm : 1 mm / A3
Sheet: 302 page 1 / 1

Terminal diagram

+JOCC-ETB1-X017

External cable								+JETTY -W017 VG-YMvKas Dca-s2 3 x 6 mm²	General remarks		Terminal block : -X017						Number of terminals : 4		Schwarz 6mm²					Internal cable
									External destination		Terminal number	Wire jumper	Jumper	Terminal type	Terminal number	Cross-reference	Internal destination							
Comment									Device	Pin							Pin	Device						Comment
PT 6								1	-JB17 -X17	1	**1**			PT 6		/75.5D	2	-DCB1 -89K2	7					
PT 6								2	-JB17 -X17	2	**2**			PT 6		/75.5D	4	-DCB1 -89K2	8					
PT 6								3	-JB17 -X17	3	**3**			PT 6		/75.5D	6	-DCB1 -89K2	9					
PT 6 PE								S	-JB17 -X17	PE	**PE**			PT 6 PE		/75.5D								

Index	Revision	Date	name						
2	Final as built	19-3-2025	M.Besseling	Drawn:	31-10-2024	elshofjo	**KANON LOADING EQUIPMENT B.V.**		
1	For approval	13-11-2024	besselingmi	Engineer:	19-9-2024	besselingmi			
				Approved:			Ref: P242068, B242352	Quote:	
				Changed:			Order: 2011280786	Item: 001000	

KANON LOADING EQUIPMENT
www.kanon.nl

Electromach BV
Jan Tinbergenstraat 193
7559 SP Hengelo
The Netherlands

Terminal diagram

Int. Revision :	P242068A91
Drawing No.: 2011280786-001000-24	+JOCC-ETB1-X017
	Scale: 1 mm : 1 mm / A3
Refer to protection notice ISO 16016	Sheet: 303 page 1 / 1

Terminal diagram

+JOCC-ETB1-X018

External cable									General remarks		Terminal block : -X018						Number of terminals : 4								Internal cable
								+JETTY -W018 KVCY Dca 5 x 0,75 mm²	External destination		Terminal number	Wire jumper	Jumper	Terminal type	Terminal number	Cross-reference	Internal destination		Schwarz 0,75mm²						
Comment									Device	Pin							Pin	Device							Comment
PT 2,5								1	-JB18 -X18	1	**1**			PT 2,5		/180.1C	11	-DCB1 -100K3	20						
PT 2,5								2	-JB18 -X18	2	**2**			PT 2,5		/180.1B			21						
PT 2,5								3	-JB18 -X18	3	**3**			PT 2,5		/180.3C	11	-DCB1 -100K4	22						
PT 2,5								4	-JB18 -X18	4	**4**			PT 2,5		/180.3B									

Index	Revision	Date	name
2	Final as built	19-3-2025	M.Besseling
1	For approval	13-11-2024	besselingmi

Drawn: 31-10-2024 elshofjo
Engineer: 19-9-2024 besselingmi
Approved:
Changed:

KANON LOADING EQUIPMENT B.V.

Ref: P242068, B242352 Quote:
Order: 2011280786 Item: 001000

KANON LOADING EQUIPMENT
www.kanon.nl

Electromach BV
Jan Tinbergenstraat 193
7559 SP Hengelo
The Netherlands
US

Terminal diagram

Int. Revision :
Drawing No.: 2011280786-001000-24
Refer to protection notice ISO 16016

P242068A91
+JOCC-ETB1-X018
Scale: 1 mm : 1 mm / A3
Sheet: 304 page 1 / 1

Terminal diagram

+JOCC-ETB1-X019

External cable								+JETTY -W019 KVCY Dca 25 x 0,75 mm²	General remarks		Terminal block : -X019						Number of terminals : 24		Schwarz 0,75mm²					Internal cable
									External destination		Terminal number	Wire jumper	Jumper	Terminal type	Terminal number	Cross-reference	Internal destination							
Comment									Device	Pin							Pin	Device						Comment
											1			PT 2,5		/135.1D	IN 8	-DCB2 -94U2 IN 8	1					
PT 2,5								2	-JB19 -X19	2	**2**			PT 2,5		/135.2D	IN 9	-DCB2 -94U2 IN 9	2					
PT 2,5								3	-JB19 -X19	3	**3**			PT 2,5		/135.3D	IN 10	-DCB2 -94U2 IN 10	3					
PT 2,5								4	-JB19 -X19	4	**4**			PT 2,5		/135.4D	IN 11	-DCB2 -94U2 IN 11	4					
PT 2,5								5	-JB19 -X19	5	**5**			PT 2,5		/135.5D	IN 12	-DCB2 -94U2 IN 12	5					
PT 2,5								6	-JB19 -X19	6	**6**			PT 2,5		/135.6D	IN 13	-DCB2 -94U2 IN 13	6					
PT 2,5								7	-JB19 -X19	7	**7**			PT 2,5		/135.7D	IN 14	-DCB2 -94U2 IN 14	7					
PT 2,5								8	-JB19 -X19	8	**8**			PT 2,5		/135.8D	IN 15	-DCB2 -94U2 IN 15	8					
PT 2,5								9	-JB19 -X19	9	**9**			PT 2,5		/136.1D	IN 16	-DCB2 -94U2 IN 16	9					
PT 2,5								10	-JB19 -X19	10	**10**			PT 2,5		/136.2D	IN 17	-DCB2 -94U2 IN 17	10					
PT 2,5								11	-JB19 -X19	11	**11**			PT 2,5		/136.3D	IN 18	-DCB2 -94U2 IN 18	11					
PT 2,5								12	-JB19 -X19	12	**12**			PT 2,5		/136.4D	IN 19	-DCB2 -94U2 IN 19	12					
PT 2,5								13	-JB19 -X19	13	**13**			PT 2,5		/136.5D	IN 20	-DCB2 -94U2 IN 20	13					
PT 2,5								14	-JB19 -X19	14	**14**			PT 2,5		/136.6D	IN 21	-DCB2 -94U2 IN 21	14					
PT 2,5								15	-JB19 -X19	15	**15**			PT 2,5		/136.7D	IN 22	-DCB2 -94U2 IN 22	15					
PT 2,5								16	-JB19 -X19	16	**16**			PT 2,5		/136.8D	IN 23	-DCB2 -94U2 IN 23	16					
PT 2,5								17	-JB19 -X19	17	**17**			PT 2,5		/86.4C								
PT 2,5								18	-JB19 -X19	18	**18**			PT 2,5		/86.4C								
PT 2,5								19	-JB19 -X19	19	**19**			PT 2,5		/86.4C								
PT 2,5								20	-JB19 -X19	20	**20**			PT 2,5		/86.4C								
PT 2,5								21	-JB19 -X19	21	**21**			PT 2,5		/86.4C								
PT 2,5								22	-JB19 -X19	22	**22**			PT 2,5		/86.5C	1	-DCB2 -Xint10	22					PT 2,5
PT 2,5								23	-JB19 -X19	23	**23**			PT 2,5		/86.5C	2	-DCB2 -86F5	23				24V	DC Control supply radio receive
PT 2,5								24	-JB19 -X19	24	**24**			PT 2,5		/86.5C	2	-DCB2 -Xint-	24					PT 2,5

Index	Revision	Date	name
2	*Final as built*	*19-3-2025*	*M.Besseling*
1	*For approval*	*13-11-2024*	*besselingmi*

Drawn:	*31-10-2024*	*elshofjo*
Engineer:	*19-9-2024*	*besselingmi*
Approved:		
Changed:		

KANON LOADING EQUIPMENT B.V.

Ref: *P242068, B242352* Quote:

Order: *2011280786* Item: *001000*

KANON LOADING EQUIPMENT

www.kanon.nl

Electromach BV
Jan Tinbergenstraat 193
7559 SP Hengelo
The Netherlands
US

Terminal diagram

Int. Revision :

Drawing No.:
2011280786-001000-24

Refer to protection notice ISO 16016

P242068A91

+JOCC-ETB1-X019

Scale: *1 mm : 1 mm / A3*

Sheet: *305* page *1 / 1*

Terminal diagram

+JOCC-ETB1-X6

External cable									General remarks		Terminal block : -X6						Number of terminals : 16		Schwarz 0,75mm²					Internal cable
									External destination		Terminal number	Wire jumper	Jumper	Terminal type	Terminal number	Cross-reference	Internal destination							
Comment									Device	Pin							Pin	Device						Comment
											1			PT 2,5		/240.1B	14	-DCB1 -100K7	1					
											2			PT 2,5		/240.1B	11	-DCB1 -100K7	2					
											3			PT 2,5		/240.2B	14	-DCB1 -100K8	3					
											4			PT 2,5		/240.2B	11	-DCB1 -100K8	4					
											5			PT 2,5		/240.4B	14	-DCB1 -106K1	5					
											6			PT 2,5		/240.4B	11	-DCB1 -106K1	6					
											7			PT 2,5		/240.5B	14	-DCB1 -106K2	7					
											8			PT 2,5		/240.5B	11	-DCB1 -106K2	8					
											9			PT 2,5		/240.6B	14	-DCB1 -106K3	9					
											10			PT 2,5		/240.6B	11	-DCB1 -106K3	10					
											11			PT 2,5		/240.7B	14	-DCB1 -110K1	11					
											12			PT 2,5		/240.7B	11	-DCB1 -110K1	12					
											13			PT 2,5		/240.8B	14	-DCB1 -110K2	13					
											14			PT 2,5		/240.8B	11	-DCB1 -110K2	14					
											15			PT 2,5		/240.9B	14	-DCB1 -110K3	15					
											16			PT 2,5		/240.9B	11	-DCB1 -110K3	16					

Index	Revision	Date	name
2	Final as built	19-3-2025	M.Besseling
1	For approval	13-11-2024	besselingmi

Drawn:	31-10-2024	elshofjo
Engineer:	19-9-2024	besselingmi
Approved:		
Changed:		

KANON LOADING EQUIPMENT B.V.

Ref:	P242068, B242352	Quote:	
Order:	2011280786	Item:	001000

KANON LOADING EQUIPMENT

www.kanon.nl

Electromach BV
Jan Tinbergenstraat 193
7559 SP Hengelo
The Netherlands
US

Terminal diagram

Int. Revision :	P242068A91
Drawing No.: 2011280786-001000-24	+JOCC-ETB1-X6
Refer to protection notice ISO 16016	Scale: 1 mm : 1 mm / A3
	Sheet: 306 page 1 / 1

Terminal diagram

+JOCC-ETB1-XERC

External cable									General remarks		Terminal block : -XERC						Number of terminals : 4		Schwarz 0,75mm²					Internal cable
									External destination		Terminal number	Wire jumper	Jumper	Terminal type	Terminal number	Cross-reference	Internal destination							
Comment									Device	Pin							Pin	Device						Comment
									-160S2	13	**1**			PT 2,5		/160.2A	2	-DCB2 -Xint10	19					PT 2,5
									-160S2	14	**2**			PT 2,5		/160.2C	1	-DCB1 -Xint6	23					PT 2,5
									-160S3	21	**3**			PT 2,5		/160.3A	2	-DCB2 -Xint10						PT 2,5
									-160S3	22	**4**			PT 2,5		/160.3C	2	-DCB1 -Xint6	24					PT 2,5

Index	Revision	Date	name				
2	Final as built	19-3-2025	M.Besseling	Drawn:	31-10-2024	elshofjo	
1	For approval	13-11-2024	besselingmi	Engineer:	19-9-2024	besselingmi	
				Approved:			
				Changed:			

KANON LOADING EQUIPMENT B.V.

Ref: P242068, B242352 Quote:

Order: 2011280786 Item: 001000

KANON LOADING EQUIPMENT

www.kanon.nl

Electromach BV
Jan Tinbergenstraat 193
7559 SP Hengelo
The Netherlands
US

Terminal diagram

Int. Revision :

Drawing No.:
2011280786-001000-24

Refer to protection notice ISO 16016

P242068A91

+JOCC-ETB1-XERC

Scale: 1 mm : 1 mm / A3

Sheet: 307 page 1 / 1

Terminal diagram

+JOCC-ETB1-XLA1

External cable								General remarks		Terminal block : -XLA1						Number of terminals : 24								Internal cable
									External destination							Internal destination								
Comment								+JETTY -W101 KVCY Dca 25 x 1,5 mm²	Device	Pin	Terminal number	Wire jumper	Jumper	Terminal type	Terminal number	Cross-reference	Pin	Device	Schwarz 0,75mm²					Comment
PT 2,5								1	-JB5A -X5	1	**1**			PT 2,5		/112.1C	2	-DCB1 -112F1	1					
PT 2,5								2	-JB5A -X5	2	**2**			PT 2,5		/112.2C	2	-DCB1 -112F2	2					
PT 2,5								3	-JB5A -X5	3	**3**			PT 2,5		/112.3C	2	-DCB1 -112F3	3					
PT 2,5								4	-JB5A -X5	4	**4**			PT 2,5		/112.4C	2	-DCB1 -112F4	4					
PT 2,5								5	-JB5A -X5	5	**5**			PT 2,5		/112.5C	2	-DCB1 -112F5	5					
PT 2,5								6	-JB5A -X5	6	**6**			PT 2,5		/112.6C	2	-DCB1 -112F6	6					
PT 2,5								7	-JB5A -X5	7	**7**			PT 2,5		/112.7C	2	-DCB1 -112F7	7					
PT 2,5								8	-JB5A -X5	8	**8**			PT 2,5		/112.8C	2	-DCB1 -112F8	8					
PT 2,5								9	-JB5A -X5	9	**9**	●		PT 2,5		/190.1C	14	-DCB1 -163K1	9					
PT 2,5								10	-JB5A -X5	10	**10**	●		PT 2,5		/190.1C								
PT 2,5								11	-JB5A -X5	11	**11**	●		PT 2,5		/190.3C	LO	-DCB1 -163K2	11					
PT 2,5								12	-JB5A -X5	12	**12**	●		PT 2,5		/190.3C								
PT 2,5								13	-JB5A -X5	13	**13**			PT 2,5		/190.4C	2	-DCB1 -190F4	13					
PT 2,5								14	-JB5A -X5	14	**14**			PT 2,5		/190.5C	2	-DCB1 -190F5	14					
PT 2,5								15	-JB5A -X5	15	**15**			PT 2,5		/190.6C	2	-DCB1 -190F6	15					
PT 2,5								16	-JB5A -X5	16	**16**			PT 2,5		/190.7C	14	-DCB1 -163K3	16					
PT 2,5								17	-JB5A -X5	17	**17**			PT 2,5		/190.8C	14	-DCB1 -163K4	17					
PT 2,5								18	-JB5A -X5	18	**18**	●		PT 2,5		/112.1E	5	-DCB1 -XintN'	18					PT 2,5
PT 2,5								19	-JB5A -X5	19	**19**	●		PT 2,5		/112.2E								
PT 2,5								20	-JB5A -X5	20	**20**	●		PT 2,5		/112.3E								
PT 2,5								21	-JB5A -X5	21	**21**	●		PT 2,5		/112.4E								
PT 2,5								22	-JB5A -X5	22	**22**	●		PT 2,5		/112.5E								
PT 2,5								23	-JB5A -X5	33	**23**	●		PT 2,5		/190.3C	N	-DCB1 -163K2	12					
PT 2,5								24	-JB5A -X5	34	**24**	●		PT 2,5		/190.3C								

Index	Revision	Date	name
2	Final as built	19-3-2025	M.Besseling
1	For approval	13-11-2024	besselingmi

Drawn:	31-10-2024	elshofjo
Engineer:	19-9-2024	besselingmi
Approved:		
Changed:		

KANON LOADING EQUIPMENT B.V.

Ref: P242068, B242352 Quote:

Order: 2011280786 Item: 001000

KANON LOADING EQUIPMENT

www.kanon.nl

Electromach BV
Jan Tinbergenstraat 193
7559 SP Hengelo
The Netherlands
US

Terminal diagram

Int. Revision :

Drawing No.: 2011280786-001000-24

Refer to protection notice ISO 16016

P242068A91

+JOCC-ETB1-XLA1

Scale: 1 mm : 1 mm / A3

Sheet: 308 page 1 / 1

Terminal diagram

+JOCC-ETB1-XLA2

External cable									General remarks		Terminal block : -XLA2						Number of terminals : 24								Internal cable
										External destination								Internal destination								
Comment								+JETTY -W201 KVCY Dca 25 x 1,5 mm²	Device	Pin	Terminal number	Wire jumper	Jumper	Terminal type	Terminal number	Cross-reference	Pin	Device	Schwarz 0,75mm²						Comment
PT 2,5								1	-JB5B -X5	1	**1**			PT 2,5		/114.1C	2	-DCB1 -114F1	1						
PT 2,5								2	-JB5B -X5	2	**2**			PT 2,5		/114.2C	2	-DCB1 -114F2	2						
PT 2,5								3	-JB5B -X5	3	**3**			PT 2,5		/114.3C	2	-DCB1 -114F3	3						
PT 2,5								4	-JB5B -X5	4	**4**			PT 2,5		/114.4C	2	-DCB1 -114F4	4						
PT 2,5								5	-JB5B -X5	5	**5**			PT 2,5		/114.5C	2	-DCB1 -114F5	5						
PT 2,5								6	-JB5B -X5	6	**6**			PT 2,5		/114.6C	2	-DCB1 -114F6	6						
PT 2,5								7	-JB5B -X5	7	**7**			PT 2,5		/114.7C	2	-DCB1 -114F7	7						
PT 2,5								8	-JB5B -X5	8	**8**			PT 2,5		/114.8C	2	-DCB1 -114F8	8						
PT 2,5								9	-JB5B -X5	9	**9**	●		PT 2,5		/195.1C	14	-DCB1 -169K1	9						
PT 2,5								10	-JB5B -X5	10	**10**	●		PT 2,5		/195.1C									
PT 2,5								11	-JB5B -X5	11	**11**	●		PT 2,5		/195.3C	LO	-DCB1 -169K2	11						
PT 2,5								12	-JB5B -X5	12	**12**	●		PT 2,5		/195.3C									
PT 2,5								13	-JB5B -X5	13	**13**			PT 2,5		/195.4C	2	-DCB1 -195F4	13						
PT 2,5								14	-JB5B -X5	14	**14**			PT 2,5		/195.5C	2	-DCB1 -195F5	14						
PT 2,5								15	-JB5B -X5	15	**15**			PT 2,5		/195.6C	2	-DCB1 -195F6	15						
PT 2,5								16	-JB5B -X5	16	**16**			PT 2,5		/195.7C	14	-DCB1 -169K3	16						
PT 2,5								17	-JB5B -X5	17	**17**			PT 2,5		/195.8C	14	-DCB1 -169K4	17						
PT 2,5								18	-JB5B -X5	18	**18**	●		PT 2,5		/114.1E	6	-DCB1 -XintN'	18					PT 2,5	
PT 2,5								19	-JB5B -X5	19	**19**	●		PT 2,5		/114.2E									
PT 2,5								20	-JB5B -X5	20	**20**	●		PT 2,5		/114.3E									
PT 2,5								21	-JB5B -X5	21	**21**	●		PT 2,5		/114.4E									
PT 2,5								22	-JB5B -X5	22	**22**	●		PT 2,5		/114.5E									
PT 2,5								23	-JB5B -X5	33	**23**	●		PT 2,5		/195.3C	N	-DCB1 -169K2	12						
PT 2,5								24	-JB5B -X5	34	**24**	●		PT 2,5		/195.3C									

Index	Revision	Date	name				
2	*Final as built*	*19-3-2025*	*M.Besseling*	Drawn:	*31-10-2024*	*elshofjo*	
1	*For approval*	*13-11-2024*	*besselingmi*	Engineer:	*19-9-2024*	*besselingmi*	
				Approved:			
				Changed:			

KANON LOADING EQUIPMENT B.V.

Ref: *P242068, B242352* Quote:

Order: *2011280786* Item: *001000*

KANON LOADING EQUIPMENT

www.kanon.nl

Electromach BV
Jan Tinbergenstraat 193
7559 SP Hengelo
The Netherlands

Terminal diagram

Int. Revision : *P242068A91*

Drawing No.: *+JOCC-ETB1-XLA2*

2011280786-001000-24

Scale: *1 mm : 1 mm / A3*

Refer to protection notice ISO 16016

Sheet: *309* page *1 / 1*

Terminal diagram

+JOCC-ETB1-XYLA1

External cable								+JETTY -W104 KVCY Dca 12 x 1,5 mm²	General remarks		Terminal block : -XYLA1						Number of terminals : 11		Schwarz 0,75mm²					Internal cable
									External destination		Terminal number	Wire jumper	Jumper	Terminal type	Terminal number	Cross-reference	Internal destination							
Comment									Device	Pin							Pin	Device						Comment
PT 2,5								1	-JB11A -X11	1	**1**			PT 2,5		/191.1C	2,32	-DCB1 -Xint2	1					PTTB 1,5/S
PT 2,5								2	-JB11A -X11	2	**2**			PT 2,5		/191.2C								
PT 2,5								3	-JB11A -X11	3	**3**			PT 2,5		/191.3C	4,54	-DCB1 -Xint2	3					PTTB 1,5/S
PT 2,5								4	-JB11A -X11	4	**4**			PT 2,5		/191.4C								
PT 2,5								5	-JB11A -X11	5	**5**			PT 2,5		/191.5C								
PT 2,5								6	-JB11A -X11	6	**6**			PT 2,5		/191.6C								
PT 2,5								7	-JB11A -X11	7	**7**	●		PT 2,5		/191.1E	5	-DCB1 -Xint-	7					PT 2,5
PT 2,5								8	-JB11A -X11	8	**8**	●		PT 2,5		/191.2E								
PT 2,5								9	-JB11A -X11	9	**9**	●		PT 2,5		/191.3E								
PT 2,5								10	-JB11A -X11	10	**10**	●		PT 2,5		/191.4E								
PT 2,5								11	-JB11A -X11	11	**11**	●		PT 2,5		/191.5E								

Index	Revision	Date	name
2	Final as built	19-3-2025	M.Besseling
1	For approval	13-11-2024	besselingmi

Drawn:	31-10-2024	elshofjo	
Engineer:	19-9-2024	besselingmi	
Approved:			
Changed:			

KANON LOADING EQUIPMENT B.V.

Ref: P242068, B242352 Quote:

Order: 2011280786 Item: 001000

KANON LOADING EQUIPMENT

www.kanon.nl

Electromach BV
Jan Tinbergenstraat 193
7559 SP Hengelo
The Netherlands
US

Terminal diagram

Int. Revision :

Drawing No.:
2011280786-001000-24

Refer to protection notice ISO 16016

P242068A91

+JOCC-ETB1-XYLA1

Scale: 1 mm : 1 mm / A3

Sheet: 310 page 1 / 1

Terminal diagram

+JOCC-ETB1-XYLA2

External cable								+JETTY -W204 KVCY Dca 12 x 1,5 mm²	General remarks		Terminal block : -XYLA2						Number of terminals : 11		Schwarz 0,75mm²					Internal cable
									External destination		Terminal number	Wire jumper	Jumper	Terminal type	Terminal number	Cross-reference	Internal destination							
Comment									Device	Pin							Pin	Device						Comment
PT 2,5								1	-JB11B -X11	1	**1**			PT 2,5		/196.1C	2,32	-DCB1 -Xint3	13					PTTB 1,5/S
PT 2,5								2	-JB11B -X11	2	**2**			PT 2,5		/196.2C								
PT 2,5								3	-JB11B -X11	3	**3**			PT 2,5		/196.3C	4,54	-DCB1 -Xint3	15					PTTB 1,5/S
PT 2,5								4	-JB11B -X11	4	**4**			PT 2,5		/196.4C								
PT 2,5								5	-JB11B -X11	5	**5**			PT 2,5		/196.5C								
PT 2,5								6	-JB11B -X11	6	**6**			PT 2,5		/196.6C								
PT 2,5								7	-JB11B -X11	7	**7**	●		PT 2,5		/196.1E	6	-DCB1 -Xint-	19					PT 2,5
PT 2,5								8	-JB11B -X11	8	**8**	●		PT 2,5		/196.2E								
PT 2,5								9	-JB11B -X11	9	**9**	●		PT 2,5		/196.3E								
PT 2,5								10	-JB11B -X11	10	**10**	●		PT 2,5		/196.4E								
PT 2,5								11	-JB11B -X11	11	**11**	●		PT 2,5		/196.5E								

Index	Revision	Date	name
2	Final as built	19-3-2025	M.Besseling
1	For approval	13-11-2024	besselingmi

Drawn:	31-10-2024	elshofjo	
Engineer:	19-9-2024	besselingmi	
Approved:			
Changed:			

KANON LOADING EQUIPMENT B.V.

Ref: P242068, B242352 Quote:

Order: 2011280786 Item: 001000

KANON LOADING EQUIPMENT

www.kanon.nl

Electromach BV
Jan Tinbergenstraat 193
7559 SP Hengelo
The Netherlands

Terminal diagram

Int. Revision :

Drawing No.: 2011280786-001000-24

Refer to protection notice ISO 16016

P242068A91

+JOCC-ETB1-XYLA2

Scale: 1 mm : 1 mm / A3

Sheet: 311 page 1 / 1

Terminal diagram

+JOCC-ETB1-Xcom

External cable								General remarks		Terminal block : -Xcom						Number of terminals : 4							Internal cable
									External destination								Internal destination						
Comment							+JETTY -WCOM Modbus cable	Device	Pin	Terminal number	Wire jumper	Jumper	Terminal type	Terminal number	Cross-reference	Pin	Device						Comment
VAC Power supply from client							1	-CLIENT		1			PT 2,5		/90.0E	1	-DCB1 -90U3 Port 3.1	YE					
VAC Power supply from client							2	-CLIENT		2			PT 2,5		/90.1E	2	-DCB1 -90U3 Port 3.1	OG					
VAC Power supply from client							3	-CLIENT		3			PT 2,5		/90.1E	3	-DCB1 -90U3 Port 3.1	WH					
VAC Power supply from client							4	-CLIENT		4			PT 2,5		/90.1E	6	-DCB1 -90U3 Port 3.1	BU					

Index	Revision	Date	name			
2	Final as built	19-3-2025	M.Besseling	Drawn:	31-10-2024	elshofjo
1	For approval	13-11-2024	besselingmi	Engineer:	19-9-2024	besselingmi
				Approved:		
				Changed:		

KANON LOADING EQUIPMENT B.V.

Ref: P242068, B242352 Quote:

Order: 2011280786 Item: 001000

KANON LOADING EQUIPMENT

www.kanon.nl

Electromach BV
Jan Tinbergenstraat 193
7559 SP Hengelo
The Netherlands
US

Terminal diagram

Int. Revision :

Drawing No.:
2011280786-001000-24

Refer to protection notice ISO 16016

P242068A91

+JOCC-ETB1-Xcom

Scale: 1 mm : 1 mm / A3

Sheet: 312 page 1 / 1

Terminal diagram

+JOCC-ETB2-Xi14

External cable								+JETTY-W014 OZ-BL-CY 18 x 0,75 mm²	General remarks		Terminal block : -Xi14						Number of terminals : 18		Schwarz 0,75mm²					Internal cable
									External destination		Terminal number	Wire jumper	Jumper	Terminal type	Terminal number	Cross-reference	Internal destination							
Comment									Device	Pin							Pin	Device						Comment
PT 2,5 BU								1	-JB14 -X14	1	**1**			PT 2,5 BU		/205.1D	10+	-DCB2 -205U1	21					
PT 2,5 BU								2	-JB14 -X14	2	**2**			PT 2,5 BU		/205.2D	11-	-DCB2 -205U1	22					
PT 2,5 BU								3	-JB14 -X14	3	**3**			PT 2,5 BU		/205.2D	13-	-DCB2 -205U1	23					
PT 2,5 BU								4	-JB14 -X14	4	**4**			PT 2,5 BU		/205.4D	10+	-DCB2 -205U4	24					
PT 2,5 BU								5	-JB14 -X14	5	**5**			PT 2,5 BU		/205.4D	11-	-DCB2 -205U4	25					
PT 2,5 BU								6	-JB14 -X14	6	**6**			PT 2,5 BU		/205.5D	13-	-DCB2 -205U4	26					
PT 2,5 BU								7	-JB14 -X14	7	**7**			PT 2,5 BU		/205.7D	10+	-DCB2 -205U6	27					
PT 2,5 BU								8	-JB14 -X14	8	**8**			PT 2,5 BU		/205.7D	11-	-DCB2 -205U6	28					
PT 2,5 BU								9	-JB14 -X14	9	**9**			PT 2,5 BU		/205.8D	13-	-DCB2 -205U6	29					
PT 2,5 BU								10	-JB14 -X14	10	**10**			PT 2,5 BU		/206.1D	10+	-DCB2 -206U1	30					
PT 2,5 BU								11	-JB14 -X14	11	**11**			PT 2,5 BU		/206.2D	11-	-DCB2 -206U1	31					
PT 2,5 BU								12	-JB14 -X14	12	**12**			PT 2,5 BU		/206.2D	13-	-DCB2 -206U1	32					
PT 2,5 BU								13	-JB14 -X14	13	**13**			PT 2,5 BU		/206.4D	10+	-DCB2 -206U4	33					
PT 2,5 BU								14	-JB14 -X14	14	**14**			PT 2,5 BU		/206.4D	11-	-DCB2 -206U4	34					
PT 2,5 BU								15	-JB14 -X14	15	**15**			PT 2,5 BU		/206.5D	13-	-DCB2 -206U4	35					
PT 2,5 BU								16	-JB14 -X14	16	**16**			PT 2,5 BU		/206.7D	10+	-DCB2 -206U6	36					
PT 2,5 BU								17	-JB14 -X14	17	**17**			PT 2,5 BU		/206.7D	11-	-DCB2 -206U6	37					
PT 2,5 BU								18	-JB14 -X14	18	**18**			PT 2,5 BU		/206.8D	13-	-DCB2 -206U6	38					

Index	Revision	Date	name				
3	Final as built	19-3-2025	M.Besseling	Drawn:	31-10-2024	elshofjo	
2	Final for production	22-11-2024	besselingmi	Engineer:	19-9-2024	besselingmi	
1	For approval	13-11-2024	besselingmi	Approved:			
				Changed:			

KANON LOADING EQUIPMENT B.V.

Ref: P242068, B242352 Quote:

Order: 2011280786 Item: 001000

KANON LOADING EQUIPMENT

www.kanon.nl

Electromach BV
Jan Tinbergenstraat 193
7559 SP Hengelo
The Netherlands
US

Terminal diagram

Int. Revision :

Drawing No.: 2011280786-001000-24

Refer to protection notice ISO 16016

P242068A91

+JOCC-ETB2-Xi14

Scale: 1 mm : 1 mm / A3

Sheet: 313 page 1 / 1

Terminal diagram

+JOCC-ETB2-Xi15

External cable									General remarks		Terminal block : -Xi15						Number of terminals : 8								Internal cable
										External destination								Internal destination								
Comment								+JETTY-W015 OZ-BL-CY 8 x 0,75 mm²	Device	Pin	Terminal number	Wire jumper	Jumper	Terminal type	Terminal number	Cross-reference	Pin	Device	Schwarz 0,75mm²						Comment
PT 2,5 BU								1	-JB15 -X15	1	**1**			PT 2,5 BU		/200.1D	10+	-DCB2 -200U1	1						
PT 2,5 BU								2	-JB15 -X15	2	**2**			PT 2,5 BU		/200.2D	11-	-DCB2 -200U1	2						
PT 2,5 BU								3	-JB15 -X15	3	**3**			PT 2,5 BU		/200.2D	12+	-DCB2 -200U1	3						
PT 2,5 BU								4	-JB15 -X15	4	**4**			PT 2,5 BU		/200.2D	13-	-DCB2 -200U1	4						
PT 2,5 BU								5	-JB15 -X15	5	**5**			PT 2,5 BU		/200.4D	10+	-DCB2 -200U4	5						
PT 2,5 BU								6	-JB15 -X15	6	**6**			PT 2,5 BU		/200.5D	11-	-DCB2 -200U4	6						
PT 2,5 BU								7	-JB15 -X15	7	**7**			PT 2,5 BU		/200.5D	12+	-DCB2 -200U4	7						
PT 2,5 BU								8	-JB15 -X15	8	**8**			PT 2,5 BU		/200.5D	13-	-DCB2 -200U4	8						

Index	Revision	Date	name				
3	Final as built	19-3-2025	M.Besseling	Drawn:	31-10-2024	elshofjo	
2	Final for production	22-11-2024	besselingmi	Engineer:	19-9-2024	besselingmi	
1	For approval	13-11-2024	besselingmi	Approved:			
				Changed:			

KANON LOADING EQUIPMENT B.V.

Ref: P242068, B242352 Quote:

Order: 2011280786 Item: 001000

KANON LOADING EQUIPMENT

www.kanon.nl

Electromach BV
Jan Tinbergenstraat 193
7559 SP Hengelo
The Netherlands
US

Terminal diagram

Int. Revision :

Drawing No.:
2011280786-001000-24

Refer to protection notice ISO 16016

P242068A91

+JOCC-ETB2-Xi15

Scale: 1 mm : 1 mm / A3

Sheet: 314 page 1 / 1

Terminal diagram

+JOCC-ETB2-XiLA1

External cable						+JETTY -W102-3 OZ-BL-CY 12 x 0,75 mm²	+JETTY -W102-2 OZ-BL-CY 25 x 0,75 mm²	+JETTY -W102-1 OZ-BL-CY 18 x 0,75 mm²	General remarks		Terminal block : -XiLA1						Number of terminals : 56		Schwarz 0,75mm²					Internal cable
									External destination		Terminal number	Wire jumper	Jumper	Terminal type	Terminal number	Cross-reference	Internal destination							
Comment									Device	Pin							Pin	Device						Comment
PTTB 2,5 BU (bottom row)								1	-JB4A -X4	1,21	**1**			PT 2,5 BU		/212.1D	10+	-DCB2 -212U1	23					
(top row)								2	-JB4A -X4	1,22	**2**			PT 2,5 BU		/212.2D	11-	-DCB2 -212U1	24					
PTTB 2,5 BU (bottom row)								3	-JB4A -X4	3,43	**3**			PT 2,5 BU		/212.4D	10+	-DCB2 -212U4	27					
(top row)								4	-JB4A -X4	3,44	**4**			PT 2,5 BU		/212.4D	11-	-DCB2 -212U4	28					
PTTB 2,5 BU (bottom row)								5	-JB4A -X4	5,65	**5**			PT 2,5 BU		/212.7D	10+	-DCB2 -212U6	31					
(top row)								6	-JB4A -X4	5,66	**6**			PT 2,5 BU		/212.7D	11-	-DCB2 -212U6	32					
PTTB 2,5 BU (bottom row)								7	-JB4A -X4	7,87	**7**			PT 2,5 BU		/218.1D								
(top row)								8	-JB4A -X4	7,88	**8**			PT 2,5 BU		/218.2D								
PTTB 2,5 BU (bottom row)								9	-JB4A -X4	9,109	**9**			PT 2,5 BU		/213.1D	10+	-DCB2 -213U1	35					
(top row)								10	-JB4A -X4	9,1010	**10**			PT 2,5 BU		/213.2D	11-	-DCB2 -213U1	36					
PTTB 2,5 BU (bottom row)								11	-JB4A -X4	11,1211	**11**			PT 2,5 BU		/213.2D	12+	-DCB2 -213U1	37					
(top row)								12	-JB4A -X4	11,1212	**12**			PT 2,5 BU		/213.2D	13-	-DCB2 -213U1	38					
PTTB 2,5 BU (bottom row)								13	-JB4A -X4	13,1413	**13**			PT 2,5 BU		/212.5D	12+	-DCB2 -212U4	29					
(top row)								14	-JB4A -X4	13,1414	**14**			PT 2,5 BU		/212.5D	13-	-DCB2 -212U4	30					
PTTB 2,5 BU (bottom row)								15	-JB4A -X4	15,1615	**15**			PT 2,5 BU		/212.8D	12+	-DCB2 -212U6	33					
(top row)								16	-JB4A -X4	15,1616	**16**			PT 2,5 BU		/212.8D	13-	-DCB2 -212U6	34					
PTTB 2,5 BU (bottom row)								17	-JB4A -X4	17,1817	**17**			PT 2,5 BU		/218.2D								
(top row)								18	-JB4A -X4	17,1818	**18**			PT 2,5 BU		/218.2D								
PTTB 2,5 BU (bottom row)							1		-JB4A -X4	19,2019	**19**			PT 2,5 BU		/210.1D	10+	-DCB2 -210U1	1					
(top row)							2		-JB4A -X4	19,2020	**20**			PT 2,5 BU		/210.2D	11-	-DCB2 -210U1	2					
PTTB 2,5 BU (bottom row)							3		-JB4A -X4	21,2221	**21**			PT 2,5 BU		/210.2D	12+	-DCB2 -210U1	3					
(top row)							4		-JB4A -X4	21,2222	**22**			PT 2,5 BU		/210.2D	13-	-DCB2 -210U1	4					
PTTB 2,5 BU (bottom row)							5		-JB4A -X4	23,2423	**23**			PT 2,5 BU		/213.4D	10+	-DCB2 -213U4	39					
(top row)							6		-JB4A -X4	23,2424	**24**			PT 2,5 BU		/213.4D	11-	-DCB2 -213U4	40					
PTTB 2,5 BU (bottom row)							7		-JB4A -X4	25,2625	**25**			PT 2,5 BU		/210.4D	10+	-DCB2 -210U4	5					
(top row)							8		-JB4A -X4	25,2626	**26**			PT 2,5 BU		/210.4D	11-	-DCB2 -210U4	6					
PTTB 2,5 BU (bottom row)							9		-JB4A -X4	27,2827	**27**			PT 2,5 BU		/210.5D	12+	-DCB2 -210U4	7					
(top row)							10		-JB4A -X4	27,2828	**28**			PT 2,5 BU		/210.5D	13-	-DCB2 -210U4	8					
PTTB 2,5 BU (bottom row)							11		-JB4A -X4	29,3029	**29**			PT 2,5 BU		/210.7D	10+	-DCB2 -210U6	9					
(top row)							12		-JB4A -X4	29,3030	**30**			PT 2,5 BU		/210.7D	11-	-DCB2 -210U6	10					
PTTB 2,5 BU (bottom row)							13		-JB4A -X4	31,3231	**31**			PT 2,5 BU		/210.8D	12+	-DCB2 -210U6	11					
(top row)							14		-JB4A -X4	31,3232	**32**			PT 2,5 BU		/210.8D	13-	-DCB2 -210U6	12					
PTTB 2,5 BU (bottom row)							15		-JB4A -X4	33,3433	**33**			PT 2,5 BU		/211.1D	10+	-DCB2 -211U1	13					
(top row)							16		-JB4A -X4	33,3434	**34**			PT 2,5 BU		/211.2D	11-	-DCB2 -211U1	14					
PTTB 2,5 BU (bottom row)							17		-JB4A -X4	35,3635	**35**			PT 2,5 BU		/211.2D	12+	-DCB2 -211U1	15					
(top row)							18		-JB4A -X4	35,3636	**36**			PT 2,5 BU		/211.2D	13-	-DCB2 -211U1	16					
PTTB 2,5 BU (bottom row)							19		-JB4A -X4	37,3837	**37**			PT 2,5 BU		/211.4D	10+	-DCB2 -211U4	17					
(top row)							20		-JB4A -X4	37,3838	**38**			PT 2,5 BU		/211.4D	11-	-DCB2 -211U4	18					
PTTB 2,5 BU (bottom row)							21		-JB4A -X4	39,4039	**39**			PT 2,5 BU		/211.5D	12+	-DCB2 -211U4	19					
(top row)							22		-JB4A -X4	39,4040	**40**			PT 2,5 BU		/211.5D	13-	-DCB2 -211U4	20					
PTTB 2,5 BU (bottom row)							23		-JB4A -X4	41,4241	**41**			PT 2,5 BU		/218.3D								
(top row)							24		-JB4A -X4	41,4242	**42**			PT 2,5 BU		/218.3D								
PTTB 2,5 BU (bottom row)							25		-JB4A -X4	43,4443	**43**			PT 2,5 BU		/218.3D								
											44			PT 2,5 BU		/218.3D								
PTTB 2,5 BU (bottom row)						1			-JB4A -X4	45,4645	**45**			PT 2,5 BU		/212.2D	12+	-DCB2 -212U1	25					
(top row)						2			-JB4A -X4	45,4646	**46**			PT 2,5 BU		/212.2D	13-	-DCB2 -212U1	26					
PTTB 2,5 BU (bottom row)						3			-JB4A -X4	47,4847	**47**			PT 2,5 BU		/211.7D	10+	-DCB2 -211U6	21					
(top row)						4			-JB4A -X4	47,4848	**48**			PT 2,5 BU		/211.7D	11-	-DCB2 -211U6	22					
PTTB 2,5 BU (bottom row)						5			-JB4A -X4	49,5049	**49**			PT 2,5 BU		/146.1C	10	-DCB2 -146U0	45					

Index	Revision	Date	name
3	Final as built	19-3-2025	M.Besseling
2	Final for production	22-11-2024	besselingmi
1	For approval	13-11-2024	besselingmi

Drawn: 31-10-2024 elshofjo
Engineer: 19-9-2024 besselingmi
Approved:
Changed:

KANON LOADING EQUIPMENT B.V.

Ref: P242068, B242352 Quote:
Order: 2011280786 Item: 001000

KANON LOADING EQUIPMENT
www.kanon.nl

Electromach BV
Jan Tinbergenstraat 193
7559 SP Hengelo
The Netherlands

Terminal diagram

Int. Revision : P242068A91
Drawing No.: 2011280786-001000-24 +JOCC-ETB2-XiLA1
Refer to protection notice ISO 16016
Scale: 1 mm : 1 mm / A3
Sheet: 315 page 1 / 2

Terminal diagram

+JOCC-ETB2-XiLA1

General remarks

Terminal block : -XiLA1

Number of terminals : 56

External cable								+JETTY-W102-3 OZ-BL-CY 12 x 0,75 mm²	External destination		Terminal number	Wire jumper	Jumper	Terminal type	Terminal number	Cross-reference	Internal destination		Schwarz 0,75mm²					Internal cable
Comment									Device	Pin							Pin	Device						Comment
(top row)								6	-JB4A -X4	49,5050	**50**			PT 2,5 BU		/146.1C	11	-DCB2 -146U0	46					
PTTB 2,5 BU (bottom row)								7	-JB4A -X4	51,5251	**51**			PT 2,5 BU		/218.4D								
(top row)								8	-JB4A -X4	51,5252	**52**			PT 2,5 BU		/218.4D								
PTTB 2,5 BU (bottom row)								9	-JB4A -X4	53,5453	**53**			PT 2,5 BU		/218.4D								
(top row)								10	-JB4A -X4	53,5454	**54**			PT 2,5 BU		/218.4D								
PTTB 2,5 BU (bottom row)								11	-JB4A -X4	55,5655	**55**			PT 2,5 BU		/218.5D								
(top row)								12	-JB4A -X4	55,5656	**56**			PT 2,5 BU		/218.5D								

Index	Revision	Date	name
3	Final as built	19-3-2025	M.Besseling
2	Final for production	22-11-2024	besselingmi
1	For approval	13-11-2024	besselingmi

Drawn:	31-10-2024	elshofjo	
Engineer:	19-9-2024	besselingmi	
Approved:			
Changed:			

KANON LOADING EQUIPMENT B.V.

Ref: P242068, B242352 Quote:

Order: 2011280786 Item: 001000

KANON LOADING EQUIPMENT

www.kanon.nl

Electromach BV
Jan Tinbergenstraat 193
7559 SP Hengelo
The Netherlands

Terminal diagram

Int. Revision :

Drawing No.: 2011280786-001000-24

Refer to protection notice ISO 16016

P242068A91

+JOCC-ETB2-XiLA1

Scale: 1 mm : 1 mm / A3

Sheet: 315 page 2 / 2

Terminal diagram

+JOCC-ETB2-XiLA2

External cable						+JETTY -W202-3 OZ-BL-CY 12 x 0,75 mm²	+JETTY -W202-2 OZ-BL-CY 25 x 0,75 mm²	+JETTY -W202-1 OZ-BL-CY 18 x 0,75 mm²	General remarks		Terminal block : -XiLA2						Number of terminals : 56		Schwarz 0,75mm²					Internal cable
									External destination		Terminal number	Wire jumper	Jumper	Terminal type	Terminal number	Cross-reference	Internal destination							
Comment									Device	Pin							Pin	Device						Comment
PTTB 2,5 BU (bottom row)								1	-JB4B -X4	1	**1**			PT 2,5 BU		/222.1D	10+	-DCB2 -222U1	23					
(top row)								2	-JB4B -X4	2	**2**			PT 2,5 BU		/222.2D	11-	-DCB2 -222U1	24					
PTTB 2,5 BU (bottom row)								3	-JB4B -X4	3	**3**			PT 2,5 BU		/222.4D	10+	-DCB2 -222U4	27					
(top row)								4	-JB4B -X4	4	**4**			PT 2,5 BU		/222.4D	11-	-DCB2 -222U4	28					
PTTB 2,5 BU (bottom row)								5	-JB4B -X4	5	**5**			PT 2,5 BU		/222.7D	10+	-DCB2 -222U6	31					
(top row)								6	-JB4B -X4	6	**6**			PT 2,5 BU		/222.7D	11-	-DCB2 -222U6	32					
PTTB 2,5 BU (bottom row)								7	-JB4B -X4	7	**7**			PT 2,5 BU		/228.1D								
(top row)								8	-JB4B -X4	8	**8**			PT 2,5 BU		/228.2D								
PTTB 2,5 BU (bottom row)								9	-JB4B -X4	9	**9**			PT 2,5 BU		/223.1D	10+	-DCB2 -223U1	35					
(top row)								10	-JB4B -X4	10	**10**			PT 2,5 BU		/223.2D	11-	-DCB2 -223U1	36					
PTTB 2,5 BU (bottom row)								11	-JB4B -X4	11	**11**			PT 2,5 BU		/223.2D	12+	-DCB2 -223U1	37					
(top row)								12	-JB4B -X4	12	**12**			PT 2,5 BU		/223.2D	13-	-DCB2 -223U1	38					
PTTB 2,5 BU (bottom row)								13	-JB4B -X4	13	**13**			PT 2,5 BU		/222.5D			29					
(top row)								14	-JB4B -X4	14	**14**			PT 2,5 BU		/222.5D			30					
PTTB 2,5 BU (bottom row)								15	-JB4B -X4	15	**15**			PT 2,5 BU		/222.8D	12+	-DCB2 -222U6	33					
(top row)								16	-JB4B -X4	16	**16**			PT 2,5 BU		/222.8D	13-	-DCB2 -222U6	34					
PTTB 2,5 BU (bottom row)								17	-JB4B -X4	17	**17**			PT 2,5 BU		/228.2D								
(top row)								18	-JB4B -X4	18	**18**			PT 2,5 BU		/228.2D								
PTTB 2,5 BU (bottom row)							1		-JB4B -X4	19	**19**			PT 2,5 BU		/220.1D	10+	-DCB2 -220U1	1					
(top row)							2		-JB4B -X4	20	**20**			PT 2,5 BU		/220.2D	11-	-DCB2 -220U1	2					
PTTB 2,5 BU (bottom row)							3		-JB4B -X4	21	**21**			PT 2,5 BU		/220.2D	12+	-DCB2 -220U1	3					
(top row)							4		-JB4B -X4	22	**22**			PT 2,5 BU		/220.2D	13-	-DCB2 -220U1	4					
PTTB 2,5 BU (bottom row)							5		-JB4B -X4	23	**23**			PT 2,5 BU		/223.4D	10+	-DCB2 -223U4	39					
(top row)							6		-JB4B -X4	24	**24**			PT 2,5 BU		/223.4D	11-	-DCB2 -223U4	40					
PTTB 2,5 BU (bottom row)							7		-JB4B -X4	25	**25**			PT 2,5 BU		/220.4D	10+	-DCB2 -220U4	5					
(top row)							8		-JB4B -X4	26	**26**			PT 2,5 BU		/220.4D	11-	-DCB2 -220U4	6					
PTTB 2,5 BU (bottom row)							9		-JB4B -X4	27	**27**			PT 2,5 BU		/220.5D	12+	-DCB2 -220U4	7					
(top row)							10		-JB4B -X4	28	**28**			PT 2,5 BU		/220.5D	13-	-DCB2 -220U4	8					
PTTB 2,5 BU (bottom row)							11		-JB4B -X4	29	**29**			PT 2,5 BU		/220.7D	10+	-DCB2 -220U6	9					
(top row)							12		-JB4B -X4	30	**30**			PT 2,5 BU		/220.7D	11-	-DCB2 -220U6	10					
PTTB 2,5 BU (bottom row)							13		-JB4B -X4	31	**31**			PT 2,5 BU		/220.8D	12+	-DCB2 -220U6	11					
(top row)							14		-JB4B -X4	32	**32**			PT 2,5 BU		/220.8D	13-	-DCB2 -220U6	12					
PTTB 2,5 BU (bottom row)							15		-JB4B -X4	33	**33**			PT 2,5 BU		/221.1D	10+	-DCB2 -221U1	13					
(top row)							16		-JB4B -X4	34	**34**			PT 2,5 BU		/221.2D	11-	-DCB2 -221U1	14					
PTTB 2,5 BU (bottom row)							17		-JB4B -X4	35	**35**			PT 2,5 BU		/221.2D	12+	-DCB2 -221U1	15					
(top row)							18		-JB4B -X4	36	**36**			PT 2,5 BU		/221.2D	13-	-DCB2 -221U1	16					
PTTB 2,5 BU (bottom row)							19		-JB4B -X4	37	**37**			PT 2,5 BU		/221.4D	10+	-DCB2 -221U4	17					
(top row)							20		-JB4B -X4	38	**38**			PT 2,5 BU		/221.4D	11-	-DCB2 -221U4	18					
PTTB 2,5 BU (bottom row)							21		-JB4B -X4	39	**39**			PT 2,5 BU		/221.5D	12+	-DCB2 -221U4	19					
(top row)							22		-JB4B -X4	40	**40**			PT 2,5 BU		/221.5D	13-	-DCB2 -221U4	20					
PTTB 2,5 BU (bottom row)							23		-JB4B -X4	41	**41**			PT 2,5 BU		/228.3D								
(top row)							24		-JB4B -X4	42	**42**			PT 2,5 BU		/228.3D								
PTTB 2,5 BU (bottom row)							25		-JB4B -X4	43	**43**			PT 2,5 BU		/228.3D								
											44			PT 2,5 BU		/228.3D								
PTTB 2,5 BU (bottom row)						1			-JB4B -X4	45	**45**			PT 2,5 BU		/222.2D	12+	-DCB2 -222U1	25					
(top row)						2			-JB4B -X4	46	**46**			PT 2,5 BU		/222.2D	13-	-DCB2 -222U1	26					
PTTB 2,5 BU (bottom row)						3			-JB4B -X4	47	**47**			PT 2,5 BU		/221.7D	10+	-DCB2 -221U6	21					
(top row)						4			-JB4B -X4	48	**48**			PT 2,5 BU		/221.7D	11-	-DCB2 -221U6	22					
PTTB 2,5 BU (bottom row)						5			-JB4B -X4	49	**49**			PT 2,5 BU		/146.2C	12	-DCB2 -146U0	47					

Index	Revision	Date	name				
3	Final as built	19-3-2025	M.Besseling	Drawn:	31-10-2024	elshofjo	
2	Final for production	22-11-2024	besselingmi	Engineer:	19-9-2024	besselingmi	
1	For approval	13-11-2024	besselingmi	Approved:			
				Changed:			

KANON LOADING EQUIPMENT B.V.

Ref: P242068, B242352 Quote:

Order: 2011280786 Item: 001000

KANON LOADING EQUIPMENT

www.kanon.nl

Electromach BV
Jan Tinbergenstraat 193
7559 SP Hengelo
The Netherlands

Terminal diagram

Int. Revision :

Drawing No.: 2011280786-001000-24

Refer to protection notice ISO 16016

P242068A91

+JOCC-ETB2-XiLA2

Scale: 1 mm : 1 mm / A3

Sheet: 316 page 1 / 2

Terminal diagram

+JOCC-ETB2-XiLA2

External cable								+JETTY -W202-3 OZ-BL-CY 12 x 0,75 mm²	General remarks		Terminal block : -XiLA2						Number of terminals : 56		Schwarz 0,75mm²					Internal cable
									External destination		Terminal number	Wire jumper	Jumper	Terminal type	Terminal number	Cross-reference	Internal destination							
Comment									Device	Pin							Pin	Device						Comment
(top row)								6	-JB4B -X4	50	**50**			PT 2,5 BU		/146.2C	13	-DCB2 -146U0	48					
PTTB 2,5 BU (bottom row)								7	-JB4B -X4	51	**51**			PT 2,5 BU		/228.4D								
(top row)								8	-JB4B -X4	52	**52**			PT 2,5 BU		/228.4D								
PTTB 2,5 BU (bottom row)								9	-JB4B -X4	53	**53**			PT 2,5 BU		/228.5D								
(top row)								10	-JB4B -X4	54	**54**			PT 2,5 BU		/228.5D								
PTTB 2,5 BU (bottom row)								11	-JB4B -X4	55	**55**			PT 2,5 BU		/228.5D								
(top row)								12	-JB4B -X4	56	**56**			PT 2,5 BU		/228.5D								

Index	Revision	Date	name				
3	Final as built	19-3-2025	M.Besseling	Drawn:	31-10-2024	elshofjo	
2	Final for production	22-11-2024	besselingmi	Engineer:	19-9-2024	besselingmi	
1	For approval	13-11-2024	besselingmi	Approved:			
				Changed:			

KANON LOADING EQUIPMENT B.V.

Ref: P242068, B242352 Quote:

Order: 2011280786 Item: 001000

KANON LOADING EQUIPMENT

www.kanon.nl

Electromach BV
Jan Tinbergenstraat 193
7559 SP Hengelo
The Netherlands

Terminal diagram

Int. Revision :

Drawing No.:
2011280786-001000-24

Refer to protection notice ISO 16016

P242068A91

+JOCC-ETB2-XiLA2

Scale: 1 mm : 1 mm / A3

Sheet: 316 page 2 / 2

Terminal diagram

+JOCC-ETB2-XiYLA1

External cable									General remarks		Terminal block : -XiYLA1						Number of terminals : 18								Internal cable
								+JETTY-W103 OZ-BL-CY 18 x 0,75 mm²	External destination		Terminal number	Wire jumper	Jumper	Terminal type	Terminal number	Cross-reference	Internal destination		Schwarz 0,75mm²						
Comment									Device	Pin							Pin	Device							Comment
PTTB 2,5 BU (bottom row)								1	-JB6A -X6	1,21	1			PT 2,5 BU		/215.1D	10+	-DCB2 -215U1	1						
(top row)								2	-JB6A -X6	1,22	2			PT 2,5 BU		/215.2D	11-	-DCB2 -215U1	2						
PTTB 2,5 BU (bottom row)								3	-JB6A -X6	3,43	3			PT 2,5 BU		/215.2D	12+	-DCB2 -215U1	3						
(top row)								4	-JB6A -X6	3,44	4			PT 2,5 BU		/215.2D	13-	-DCB2 -215U1	4						
PTTB 2,5 BU (bottom row)								5	-JB6A -X6	5,65	5			PT 2,5 BU		/215.4D	10+	-DCB2 -215U4	5						
(top row)								6	-JB6A -X6	5,66	6			PT 2,5 BU		/215.4D	11-	-DCB2 -215U4	6						
PTTB 2,5 BU (bottom row)								7	-JB6A -X6	7,87	7			PT 2,5 BU		/215.5D	12+	-DCB2 -215U4	7						
(top row)								8	-JB6A -X6	7,88	8			PT 2,5 BU		/215.5D	13-	-DCB2 -215U4	8						
PTTB 2,5 BU (bottom row)								9	-JB6A -X6	9,109	9			PT 2,5 BU		/215.7D	10+	-DCB2 -215U6	9						
(top row)								10	-JB6A -X6	9,1010	10			PT 2,5 BU		/215.7D	11-	-DCB2 -215U6	10						
PTTB 2,5 BU (bottom row)								11	-JB6A -X6	11,1211	11			PT 2,5 BU		/215.8D	12+	-DCB2 -215U6	11						
(top row)								12	-JB6A -X6	11,1212	12			PT 2,5 BU		/215.8D	13-	-DCB2 -215U6	12						
PTTB 2,5 BU (bottom row)								13	-JB6A -X6	13,1413	13			PT 2,5 BU		/218.7D									
(top row)								14	-JB6A -X6	13,1414	14			PT 2,5 BU		/218.7D									
PTTB 2,5 BU (bottom row)								15	-JB6A -X6	15,1615	15			PT 2,5 BU		/218.7D									
(top row)								16	-JB6A -X6	15,1616	16			PT 2,5 BU		/218.8D									
PTTB 2,5 BU (bottom row)								17	-JB6A -X6	17,1817	17			PT 2,5 BU		/218.8D									
(top row)								18	-JB6A -X6	17,1818	18			PT 2,5 BU		/218.8D									

Index	Revision	Date	name				
3	Final as built	19-3-2025	M.Besseling	Drawn:	31-10-2024	elshofjo	
2	Final for production	22-11-2024	besselingmi	Engineer:	19-9-2024	besselingmi	
1	For approval	13-11-2024	besselingmi	Approved:			
				Changed:			

KANON LOADING EQUIPMENT B.V.

Ref: P242068, B242352 Quote:

Order: 2011280786 Item: 001000

KANON LOADING EQUIPMENT

www.kanon.nl

Electromach BV
Jan Tinbergenstraat 193
7559 SP Hengelo
The Netherlands

Terminal diagram

Int. Revision :

Drawing No.: 2011280786-001000-24

Refer to protection notice ISO 16016

P242068A91

+JOCC-ETB2-XiYLA1

Scale: 1 mm : 1 mm / A3

Sheet: 317 page 1 / 1

Terminal diagram

+JOCC-ETB2-XiYLA2

External cable									General remarks		Terminal block : -XiYLA2						Number of terminals : 18								Internal cable
								+JETTY-W203 OZ-BL-CY 18 x 0,75 mm²	External destination		Terminal number	Wire jumper	Jumper	Terminal type	Terminal number	Cross-reference	Internal destination		Schwarz 0,75mm²						
Comment									Device	Pin							Pin	Device							Comment
PTTB 2,5 BU (bottom row)								1	-JB6B -X6	1,21	1			PT 2,5 BU		/225.1D	10+	-DCB2 -225U1	21						
(top row)								2	-JB6B -X6	1,22	2			PT 2,5 BU		/225.2D	11-	-DCB2 -225U1	22						
PTTB 2,5 BU (bottom row)								3	-JB6B -X6	3,43	3			PT 2,5 BU		/225.2D	12+	-DCB2 -225U1	23						
(top row)								4	-JB6B -X6	3,44	4			PT 2,5 BU		/225.2D	13-	-DCB2 -225U1	24						
PTTB 2,5 BU (bottom row)								5	-JB6B -X6	5,65	5			PT 2,5 BU		/225.4D	10+	-DCB2 -225U4	25						
(top row)								6	-JB6B -X6	5,66	6			PT 2,5 BU		/225.4D	11-	-DCB2 -225U4	26						
PTTB 2,5 BU (bottom row)								7	-JB6B -X6	7,87	7			PT 2,5 BU		/225.5D	12+	-DCB2 -225U4	27						
(top row)								8	-JB6B -X6	7,88	8			PT 2,5 BU		/225.5D	13-	-DCB2 -225U4	28						
PTTB 2,5 BU (bottom row)								9	-JB6B -X6	9,109	9			PT 2,5 BU		/225.7D	10+	-DCB2 -225U6	29						
(top row)								10	-JB6B -X6	9,1010	10			PT 2,5 BU		/225.7D	11-	-DCB2 -225U6	30						
PTTB 2,5 BU (bottom row)								11	-JB6B -X6	11,1211	11			PT 2,5 BU		/225.8D	12+	-DCB2 -225U6	31						
(top row)								12	-JB6B -X6	11,1212	12			PT 2,5 BU		/225.8D	13-	-DCB2 -225U6	32						
PTTB 2,5 BU (bottom row)								13	-JB6B -X6	13,1413	13			PT 2,5 BU		/228.7D									
(top row)								14	-JB6B -X6	13,1414	14			PT 2,5 BU		/228.7D									
PTTB 2,5 BU (bottom row)								15	-JB6B -X6	15,1615	15			PT 2,5 BU		/228.7D									
(top row)								16	-JB6B -X6	15,1616	16			PT 2,5 BU		/228.8D									
PTTB 2,5 BU (bottom row)								17	-JB6B -X6	17,1817	17			PT 2,5 BU		/228.8D									
(top row)								18	-JB6B -X6	17,1818	18			PT 2,5 BU		/228.8D									

Index	Revision	Date	name				
3	Final as built	19-3-2025	M.Besseling	Drawn:	31-10-2024	elshofjo	
2	Final for production	22-11-2024	besselingmi	Engineer:	19-9-2024	besselingmi	
1	For approval	13-11-2024	besselingmi	Approved:			
				Changed:			

KANON LOADING EQUIPMENT B.V.

Ref: P242068, B242352 Quote:

Order: 2011280786 Item: 001000

KANON LOADING EQUIPMENT

www.kanon.nl

Electromach BV
Jan Tinbergenstraat 193
7559 SP Hengelo
The Netherlands
US

Terminal diagram

Int. Revision :

Drawing No.: 2011280786-001000-24

Refer to protection notice ISO 16016

P242068A91

+JOCC-ETB2-XiYLA2

Scale: 1 mm : 1 mm / A3

Sheet: 318 page 1 / 1

Terminal diagram

+JOCC-ECB1-XCP4

External cable									General remarks		Terminal block : -XCP4						Number of terminals : 48		Schwarz 0,75mm²					Internal cable
									External destination		Terminal number	Wire jumper	Jumper	Terminal type	Terminal number	Cross-reference	Internal destination							
Comment									Device	Pin							Pin	Device						Comment
											1			PT 2,5		/81.3C	3	-DCB1 -Xint1	1					PT 2,5
											2			PT 2,5		/101.1D	OUT 8	-DCB1 -91U1 OUT 8	2					
											3			PT 2,5		/101.2D	OUT 9	-DCB1 -91U1 OUT 9	3					
											4			PT 2,5		/101.3D	OUT 10	-DCB1 -91U1 OUT 10	4					
											5			PT 2,5		/101.4D	OUT 11	-DCB1 -91U1 OUT 11	5					
									-ECB2 -101P5	X1	6			PT 2,5		/101.5D	OUT 12	-DCB1 -91U1 OUT 12	6					
									-ECB2 -101P6	X1	7			PT 2,5		/101.6D	OUT 13	-DCB1 -91U1 OUT 13	7					
											8			PT 2,5		/101.7D	OUT 14	-DCB1 -91U1 OUT 14	8					
											9			PT 2,5		/101.8D	OUT 15	-DCB1 -91U1 OUT 15	9					
											10			PT 2,5		/102.1D	OUT 16	-DCB1 -91U1 OUT 16	10					
											11			PT 2,5		/102.2D	OUT 17	-DCB1 -91U1 OUT 17	11					
											12			PT 2,5		/102.3D	OUT 18	-DCB1 -91U1 OUT 18	12					
											13			PT 2,5		/102.4D	OUT 19	-DCB1 -91U1 OUT 19	13					
											14			PT 2,5		/102.5D	OUT 20	-DCB1 -91U1 OUT 20	14					
											15			PT 2,5		/102.6D	OUT 21	-DCB1 -91U1 OUT 21	15					
											16			PT 2,5		/102.7D	OUT 22	-DCB1 -91U1 OUT 22	16					
											17			PT 2,5		/102.8D	OUT 23	-DCB1 -91U1 OUT 23	17					
											18			PT 2,5										
											19			PT 2,5										
											20			PT 2,5										
											21			PT 2,5										
											22			PT 2,5										
											23			PT 2,5										
											24			PT 2,5										
											25			PT 2,5										
											26			PT 2,5										
											27			PT 2,5										
											28			PT 2,5										
											29			PT 2,5										
											30			PT 2,5										
											31			PT 2,5										
											32			PT 2,5										
											33			PT 2,5										
											34			PT 2,5										
											35			PT 2,5										
											36			PT 2,5										
											37			PT 2,5										
											38			PT 2,5										
											39			PT 2,5										
											40			PT 2,5										
											41			PT 2,5										
											42			PT 2,5										
											43			PT 2,5										
											44			PT 2,5										
											45			PT 2,5										
											46			PT 2,5										
											47			PT 2,5										
											48			PT 2,5										

Index	Revision	Date	name
2	Final as built	19-3-2025	M.Besseling
1	For approval	13-11-2024	besselingmi

Drawn:	31-10-2024	elshofjo
Engineer:	19-9-2024	besselingmi
Approved:		
Changed:		

KANON LOADING EQUIPMENT B.V.

Ref: P242068, B242352 Quote:

Order: 2011280786 Item: 001000

KANON LOADING EQUIPMENT

www.kanon.nl

Electromach BV
Jan Tinbergenstraat 193
7559 SP Hengelo
The Netherlands
US

Terminal diagram

Int. Revision :

Drawing No.:
2011280786-001000-24

Refer to protection notice ISO 16016

P242068A91

+JOCC-ECB1-XCP4

Scale: 1 mm : 1 mm / A3

Sheet: 320 page 1 / 1

Terminal diagram

+JOCC-ECB1-XCP5

General remarks

Terminal block : -XCP5

Number of terminals : 48

External cable																							Internal cable
									External destination		Terminal number	Wire jumper	Jumper	Terminal type	Terminal number	Cross-reference	Internal destination		Schwarz 0,75mm²				
Comment									Device	Pin							Pin	Device					Comment
											1			PT 2,5		/104.1D	OUT 0	-DCB1 -91U2 OUT 0	1					
											2			PT 2,5		/104.2D	OUT 1	-DCB1 -91U2 OUT 1	2					
											3			PT 2,5		/104.3D	OUT 2	-DCB1 -91U2 OUT 2	3					
											4			PT 2,5		/104.4D	OUT 3	-DCB1 -91U2 OUT 3	4					
											5			PT 2,5		/104.5D	OUT 4	-DCB1 -91U2 OUT 4	5					
											6			PT 2,5		/104.6D	OUT 5	-DCB1 -91U2 OUT 5	6					
											7			PT 2,5		/104.7D	OUT 6	-DCB1 -91U2 OUT 6	7					
											8			PT 2,5		/104.8D	OUT 7	-DCB1 -91U2 OUT 7	8					
											9			PT 2,5		/105.1D	OUT 8	-DCB1 -91U2 OUT 8	9					
											10			PT 2,5		/105.2D	OUT 9	-DCB1 -91U2 OUT 9	10					
											11			PT 2,5		/105.3D	OUT 10	-DCB1 -91U2 OUT 10	11					
											12			PT 2,5		/105.4D	OUT 11	-DCB1 -91U2 OUT 11	12					
											13			PT 2,5		/105.5D	OUT 12	-DCB1 -91U2 OUT 12	13					
											14			PT 2,5		/105.6D	OUT 13	-DCB1 -91U2 OUT 13	14					
											15			PT 2,5		/105.7D	OUT 14	-DCB1 -91U2 OUT 14	15					
											16			PT 2,5		/105.8D	OUT 15	-DCB1 -91U2 OUT 15	16					
											17			PT 2,5		/108.1D	OUT 0	-DCB1 -91U3 OUT 0	17					
											18			PT 2,5		/108.2D	OUT 1	-DCB1 -91U3 OUT 1	18					
											19			PT 2,5		/108.3D	OUT 2	-DCB1 -91U3 OUT 2	19					
											20			PT 2,5		/108.4D	OUT 3	-DCB1 -91U3 OUT 3	20					
											21			PT 2,5		/108.5D	OUT 4	-DCB1 -91U3 OUT 4	21					
											22			PT 2,5		/108.6D	OUT 5	-DCB1 -91U3 OUT 5	22					
											23			PT 2,5		/108.7D	OUT 6	-DCB1 -91U3 OUT 6	23					
											24			PT 2,5		/108.8D	OUT 7	-DCB1 -91U3 OUT 7	24					
											25			PT 2,5		/109.1D	OUT 8	-DCB1 -91U3 OUT 8	25					
											26			PT 2,5		/109.2D	OUT 9	-DCB1 -91U3 OUT 9	26					
											27			PT 2,5		/109.3D	OUT 10	-DCB1 -91U3 OUT 10	27					
											28			PT 2,5		/109.4D	OUT 11	-DCB1 -91U3 OUT 11	28					
											29			PT 2,5		/109.5D	OUT 12	-DCB1 -91U3 OUT 12	29					
											30			PT 2,5		/109.6D	OUT 13	-DCB1 -91U3 OUT 13	30					
											31			PT 2,5		/109.7D	OUT 14	-DCB1 -91U3 OUT 14	31					
											32			PT 2,5		/109.8D	OUT 15	-DCB1 -91U3 OUT 15	32					
											33			PT 2,5										
											34			PT 2,5										
											35			PT 2,5										
											36			PT 2,5										
											37			PT 2,5										
											38			PT 2,5										
											39			PT 2,5										
											40			PT 2,5										
											41			PT 2,5										
											42			PT 2,5										
											43			PT 2,5										
											44			PT 2,5										
											45			PT 2,5										
											46			PT 2,5										
											47			PT 2,5										
											48			PT 2,5										

Index	Revision	Date	name
2	Final as built	19-3-2025	M.Besseling
1	Final for production	22-11-2024	besselingmi

Drawn:	31-10-2024	elshofjo
Engineer:	19-9-2024	besselingmi
Approved:		
Changed:		

KANON LOADING EQUIPMENT B.V.

Ref: P242068, B242352 Quote:

Order: 2011280786 Item: 001000

KANON LOADING EQUIPMENT

www.kanon.nl

Electromach BV
Jan Tinbergenstraat 193
7559 SP Hengelo
The Netherlands
US

Terminal diagram

Int. Revision :

Drawing No.: 2011280786-001000-24

Refer to protection notice ISO 16016

P242068A91

+JOCC-ECB1-XCP5

Scale: 1 mm : 1 mm / A3

Sheet: 321 page 1 / 1

Terminal diagram

+JOCC-ECB1-XETH

External cable									General remarks		Terminal block : -XETH						Number of terminals : 5								Internal cable
									External destination		Terminal number	Wire jumper	Jumper	Terminal type	Terminal number	Cross-reference	Internal destination								
Comment									Device	Pin							Pin	Device							Comment
								YE	-DCB2 -93U4 LINK 1	1	**1**			PT 2,5		/90.6E	1	-DCB1 -90U3 Port 2.2	YE						
								OG	-DCB2 -93U4 LINK 1	2	**2**			PT 2,5		/90.6E	2	-DCB1 -90U3 Port 2.2	OG						
								WH	-DCB2 -93U4 LINK 1	3	**3**			PT 2,5		/90.6E	3	-DCB1 -90U3 Port 2.2	WH						
								BU	-DCB2 -93U4 LINK 1	6	**4**			PT 2,5		/90.7E	6	-DCB1 -90U3 Port 2.2	BU						
											TE			PT 2,5-FE											

Index	Revision	Date	name						
3	Final as built	19-3-2025	M.Besseling	Drawn:	31-10-2024	elshofjo	**KANON LOADING EQUIPMENT B.V.**		
2	Final for production	22-11-2024	besselingmi	Engineer:	19-9-2024	besselingmi			
1	For approval	13-11-2024	besselingmi	Approved:			Ref: P242068, B242352	Quote:	
				Changed:			Order: 2011280786	Item: 001000	

KANON LOADING EQUIPMENT
www.kanon.nl

Electromach BV
Jan Tinbergenstraat 193
7559 SP Hengelo
The Netherlands
US

Terminal diagram

Int. Revision :	P242068A91
Drawing No.: 2011280786-001000-24	+JOCC-ECB1-XETH
	Scale: 1 mm : 1 mm / A3
Refer to protection notice ISO 16016	Sheet: 322 page 1 / 1

Terminal diagram

+JOCC-ECB2-X4

External cable									General remarks		Terminal block : -X4						Number of terminals : 8								Internal cable
							-W012 KVCY Dca 3 x 0,75 mm²	-W011 KVCY Dca 3 x 0,75 mm²	External destination		Terminal number	Wire jumper	Jumper	Terminal type	Terminal number	Cross-reference	Internal destination		Schwarz 0,75mm²						
Comment									Device	Pin							Pin	Device							Comment
Visual alarm								1	-185P1	TB1-2	**1**			PT 2,5		/185.1C	11	-DCB1 -100K5	45						
Audible alarm							1		-185P3	24V	**2**			PT 2,5		/185.3C	14	-DCB1 -100K6	47						
Visual alarm								2	-185P1	TB1-1	**3**			PT 2,5		/185.1B	4	-DCB1 -Xint-	46						PT 2,5
Audible alarm							2		-185P3	0v	**4**			PT 2,5		/185.3B									
Visual alarm								PE	-185P1	PE	**PE**			PT 2,5 PE		/185.1C									
Visual alarm								S	-185P1	PE	**PE**			PT 2,5 PE		/185.1C									
Audible alarm							PE		-185P3	PE	**PE**			PT 2,5 PE		/185.4C	PE	-ECB2							
Audible alarm							S		-185P3	PE	**PE**			PT 2,5 PE		/185.4C	PE	-ECB2							

Index	Revision	Date	name						
2	Final as built	19-3-2025	M.Besseling	Drawn:	31-10-2024	elshofjo	**KANON LOADING EQUIPMENT B.V.**		
1	For approval	13-11-2024	besselingmi	Engineer:	19-9-2024	besselingmi			
				Approved:			Ref: P242068, B242352	Quote:	
				Changed:			Order: 2011280786	Item: 001000	

KANON LOADING EQUIPMENT
www.kanon.nl

Electromach BV
Jan Tinbergenstraat 193
7559 SP Hengelo
The Netherlands

Terminal diagram

Int. Revision :	P242068A91
Drawing No.: 2011280786-001000-24	+JOCC-ECB2-X4
	Scale: 1 mm : 1 mm / A3
Refer to protection notice ISO 16016	Sheet: 323 page 1 / 1

Terminal diagram

+JOCC-ECB2-XCP3

External cable									General remarks		Terminal block : -XCP3						Number of terminals : 48		Schwarz 0,75mm²					Internal cable
									External destination		Terminal number	Wire jumper	Jumper	Terminal type	Terminal number	Cross-reference	Internal destination							
Comment									Device	Pin							Pin	Device						Comment
											1			PT 2,5		/86.1C	1	-DCB2 -Xint10	1					PT 2,5
									-ECB2 -160S1	12	2			PT 2,5		/87.1C	6	-DCB2 -Xint10	2					PT 2,5
									-ECB2 -130S1	24	3			PT 2,5		/130.1B	IN 0	-DCB2 -94U1 IN 0	3					
									-ECB2 -130S2	13	4			PT 2,5		/130.2B	IN 1	-DCB2 -94U1 IN 1	4					
									-ECB2 -130S3	13	5			PT 2,5		/130.3B	IN 2	-DCB2 -94U1 IN 2	5					
									-ECB2 -130S5	22	6			PT 2,5		/130.4B	IN 3	-DCB2 -94U1 IN 3	6					
									-ECB2 -130S5	14	7			PT 2,5		/130.5B	IN 4	-DCB2 -94U1 IN 4	7					
									-ECB2 -130S5	34	8			PT 2,5		/130.6B	IN 5	-DCB2 -94U1 IN 5	8					
									-ECB2 -130S7	12	9			PT 2,5		/130.7B	IN 6	-DCB2 -94U1 IN 6	9					
									-ECB2 -130S7	24	10			PT 2,5		/130.8B	IN 7	-DCB2 -94U1 IN 7	10					
									-ECB2 -131S1	13	11			PT 2,5		/131.1B	IN 8	-DCB2 -94U1 IN 8	11					
									-ECB2 -131S2	13	12			PT 2,5		/131.2B	IN 9	-DCB2 -94U1 IN 9	12					
									-ECB2 -131S3	13	13			PT 2,5		/131.3B	IN 10	-DCB2 -94U1 IN 10	13					
									-ECB2 -131S4	13	14			PT 2,5		/131.4B	IN 11	-DCB2 -94U1 IN 11	14					
									-ECB2 -131S5	13	15			PT 2,5		/131.5B	IN 12	-DCB2 -94U1 IN 12	15					
									-ECB2 -131S6	13	16			PT 2,5		/131.6B	IN 13	-DCB2 -94U1 IN 13	16					
									-ECB2 -131S7	24	17			PT 2,5		/131.7B	IN 14	-DCB2 -94U1 IN 14	17					
											18			PT 2,5		/131.8B	IN 15	-DCB2 -94U1 IN 15	18					
									-ECB2 -132S1	13	19			PT 2,5		/132.1B	IN 16	-DCB2 -94U1 IN 16	19					
									-ECB2 -132S2	13	20			PT 2,5		/132.2B	IN 17	-DCB2 -94U1 IN 17	20					
									-ECB2 -132S3	13	21			PT 2,5		/132.3B	IN 18	-DCB2 -94U1 IN 18	21					
									-ECB2 -132S4	13	22			PT 2,5		/132.4B	IN 19	-DCB2 -94U1 IN 19	22					
									-ECB2 -132S5	13	23			PT 2,5		/132.5B	IN 20	-DCB2 -94U1 IN 20	23					
									-ECB2 -132S6	13	24			PT 2,5		/132.6B	IN 21	-DCB2 -94U1 IN 21	24					
									-ECB2 -132S7	13	25			PT 2,5		/132.7B	IN 22	-DCB2 -94U1 IN 22	25					
									-ECB2 -132S8	13	26			PT 2,5		/132.8B	IN 23	-DCB2 -94U1 IN 23	26					
											27			PT 2,5		/133.1B	IN 24	-DCB2 -94U1 IN 24	27					
											28			PT 2,5		/133.2B	IN 25	-DCB2 -94U1 IN 25	28					
											29			PT 2,5		/133.3B	IN 26	-DCB2 -94U1 IN 26	29					
											30			PT 2,5		/133.4B	IN 27	-DCB2 -94U1 IN 27	30					
											31			PT 2,5		/133.5B	IN 28	-DCB2 -94U1 IN 28	31					
											32			PT 2,5		/133.6B	IN 29	-DCB2 -94U1 IN 29	32					
											33			PT 2,5		/133.7B	IN 30	-DCB2 -94U1 IN 30	33					
											34			PT 2,5		/133.8B	IN 31	-DCB2 -94U1 IN 31	34					
											35			PT 2,5		/160.1C	I0	-DCB2 -96U4 IN 0	35					
											36			PT 2,5										
											37			PT 2,5										
											38			PT 2,5										
											39			PT 2,5										
											40			PT 2,5										
											41			PT 2,5										
											42			PT 2,5										
											43			PT 2,5										
											44			PT 2,5										
											45			PT 2,5										
											46			PT 2,5										
											47			PT 2,5										
											48			PT 2,5										

Index	Revision	Date	name
2	Final as built	19-3-2025	M.Besseling
1	For approval	13-11-2024	besselingmi

Drawn:	31-10-2024	elshofjo
Engineer:	19-9-2024	besselingmi
Approved:		
Changed:		

KANON LOADING EQUIPMENT B.V.

Ref: P242068, B242352 Quote:

Order: 2011280786 Item: 001000

KANON LOADING EQUIPMENT

www.kanon.nl

Electromach BV
Jan Tinbergenstraat 193
7559 SP Hengelo
The Netherlands
US

Terminal diagram

Int. Revision :

Drawing No.:
2011280786-001000-24

Refer to protection notice ISO 16016

P242068A91

+JOCC-ECB2-XCP3

Scale: 1 mm : 1 mm / A3

Sheet: 324 page 1 / 1

Terminal diagram

+JOCC-DCB1-24V

External cable									General remarks		Terminal block : -24V						Number of terminals : 8							Internal cable
									External destination		Terminal number	Wire jumper	Jumper	Terminal type	Terminal number	Cross-reference	Internal destination							
Comment									Device	Pin							Pin	Device						Comment
														UT 4-HESI										
														UT 4-HESI										
														UT 4-HESI										
														UT 4-HESI										
														UT 4-HESI										
														UT 6-HESI (6,3X32)										
														UT 6-HESI (6,3X32)										
														UT 4-HESI										

Index	Revision	Date	name										
2	Final as built	19-3-2025	M.Besseling	Drawn:	31-10-2024	elshofjo	KANON LOADING EQUIPMENT B.V.		KANON LOADING EQUIPMENT	Electromach BV	Terminal diagram	Int. Revision :	P242068A91
1	For approval	13-11-2024	besselingmi	Engineer:	19-9-2024	besselingmi			www.kanon.nl	Jan Tinbergenstraat 193		Drawing No.:	+JOCC-DCB1-24V
				Approved:			Ref: P242068, B242352	Quote:		7559 SP Hengelo		2011280786-001000-24	Scale: 1 mm : 1 mm / A3
				Changed:			Order: 2011280786	Item: 001000		The Netherlands		Refer to protection notice ISO 16016	Sheet: 330 page 1 / 1

Terminal diagram

+JOCC-DCB1-115V

External cable									General remarks		Terminal block : -115V						Number of terminals : 7							Internal cable
									External destination		Terminal number	Wire jumper	Jumper	Terminal type	Terminal number	Cross-reference	Internal destination							
Comment									Device	Pin							Pin	Device						Comment
														UT 4-HESI										
														UT 4-HESI										
														UT 4-HESI										
														UT 4-HESI										
														UT 4-HESI										
														UT 4-HESI										
														UT 4-HESI										

Index	Revision	Date	name												
2	Final as built	19-3-2025	M.Besseling	Drawn:	31-10-2024	elshofjo	KANON LOADING EQUIPMENT B.V.		KANON LOADING EQUIPMENT	Electromach BV	Terminal diagram	Int. Revision :	P242068A91
1	For approval	13-11-2024	besselingmi	Engineer:	19-9-2024	besselingmi				Jan Tinbergenstraat 193		Drawing No.:	+JOCC-DCB1-115V
				Approved:			Ref: P242068, B242352	Quote:		7559 SP Hengelo		2011280786-001000-24	Scale: 1 mm : 1 mm / A3
				Changed:			Order: 2011280786	Item: 001000	www.kanon.nl	The Netherlands		Refer to protection notice ISO 16016	Sheet: 331 page 1 / 1

Terminal diagram

+JOCC-DCB1-XPE

External cable									General remarks		Terminal block : -XPE						Number of terminals : 9							Internal cable
									External destination		Terminal number	Wire jumper	Jumper	Terminal type	Terminal number	Cross-reference	Internal destination							
Comment								Schwarz 6mm²	Device	Pin							Pin	Device						Comment
								12	-ETB1	-PE-RAIL 1	**PE**			PT 6 PE		/75.2B	PE	-DCB1						
									-DCB1 -75T9	33	**PE**			PT 6 PE		/75	3/L2	-DCB1 -75F9.2						
																	PE	-DCB1						
											PE			PT 6 PE		/91.5A								
									-DCB1	PE	**PE**			PT 2,5 PE		/77.3E	PE	-DCB1 -77E3						
									-DCB1 -77U6.1	PE	**PE**			PT 2,5 PE		/77.6B	PE	-DCB1						
											PE			PT 2,5 PE		/77.8B								
115VAC socket max. 200VA									-DCB1 -77X1	PE	**PE**			PT 2,5 PE		/77.1C	PE	-DCB1						
											PE			PT 2,5 PE										
											PE			PT 2,5 PE		/77.7E	PE	-DCB1						

Index	Revision	Date	name						
2	Final as built	19-3-2025	M.Besseling	Drawn:	31-10-2024	elshofjo	**KANON LOADING EQUIPMENT B.V.**		
1	For approval	13-11-2024	besselingmi	Engineer:	19-9-2024	besselingmi			
				Approved:			Ref: P242068, B242352	Quote:	
				Changed:			Order: 2011280786	Item: 001000	

KANON LOADING EQUIPMENT
www.kanon.nl

Electromach BV
Jan Tinbergenstraat 193
7559 SP Hengelo
The Netherlands

Terminal diagram

Int. Revision :	P242068A91
Drawing No.: 2011280786-001000-24	+JOCC-DCB1-XPE
	Scale: 1 mm : 1 mm / A3
Refer to protection notice ISO 16016	Sheet: 332 page 1 / 1

Terminal diagram

+JOCC-DCB1-Xint1

External cable Comment	General remarks / External destination Device	Pin	Terminal block : -Xint1 Terminal number	Wire jumper	Jumper	Terminal type	Terminal number	Cross-reference	Number of terminals : 3 Internal destination Pin	Device	Schwarz 0,75mm²	Internal cable Comment
			1			PT 2,5		/81.2B	2	-DCB1 -24V -81F2		24VDC Control supply outputs
			2			PT 2,5		/81.2B	1	-DCB1 -Xint-		PT 2,5
			3			PT 2,5		/81.3B	1	-ECB1 -XCP4	1	PT 2,5

Index	Revision	Date	name
2	Final as built	19-3-2025	M.Besseling
1	For approval	13-11-2024	besselingmi

Drawn:	31-10-2024	elshofjo	
Engineer:	19-9-2024	besselingmi	
Approved:			
Changed:			

KANON LOADING EQUIPMENT B.V.

Ref: P242068, B242352 Quote:

Order: 2011280786 Item: 001000

KANON LOADING EQUIPMENT

www.kanon.nl

Electromach BV
Jan Tinbergenstraat 193
7559 SP Hengelo
The Netherlands
US

Terminal diagram

Int. Revision :

Drawing No.: 2011280786-001000-24

Refer to protection notice ISO 16016

P242068A91

+JOCC-DCB1-Xint1

Scale: 1 mm : 1 mm / A3

Sheet: 333 page 1 / 1

Terminal diagram

+JOCC-DCB1-Xint2

External cable									General remarks		Terminal block : -Xint2						Number of terminals : 5		Schwarz 0,75mm²					Internal cable
									External destination		Terminal number	Wire jumper	Jumper	Terminal type	Terminal number	Cross-reference	Internal destination							
Comment									Device	Pin							Pin	Device						Comment
											1			PT 6		/191.1E								
											2			PTTB 1,5/S		/191.1B	1	-ETB1 -XYLA1	1					PT 2,5
											3					/191.1B								
											4			PTTB 1,5/S		/191.3B	3	-ETB1 -XYLA1	3					PT 2,5
											5					/191.3B								

Index	Revision	Date	name
1	Final as built	19-3-2025	M.Besseling

Drawn:	31-10-2024	elshofjo
Engineer:	19-9-2024	besselingmi
Approved:		
Changed:		

KANON LOADING EQUIPMENT B.V.

Ref: P242068, B242352 Quote:

Order: 2011280786 Item: 001000

KANON LOADING EQUIPMENT

www.kanon.nl

Electromach BV
Jan Tinbergenstraat 193
7559 SP Hengelo
The Netherlands
US

Terminal diagram

Int. Revision :	P242068A91
Drawing No.: 2011280786-001000-24	+JOCC-DCB1-Xint2
	Scale: 1 mm : 1 mm / A3
Refer to protection notice ISO 16016	Sheet: 334 page 1 / 1

Terminal diagram

+JOCC-DCB1-Xint3

External cable									General remarks		Terminal block : -Xint3						Number of terminals : 5		Schwarz 0,75mm²					Internal cable
									External destination		Terminal number	Wire jumper	Jumper	Terminal type	Terminal number	Cross-reference	Internal destination							
Comment									Device	Pin							Pin	Device						Comment
											1			PT 6		/196.1E								
											2			PTTB 1,5/S		/196.1B	1	-ETB1 -XYLA2	13					PT 2,5
											3					/196.1B								
											4			PTTB 1,5/S		/196.3B	3	-ETB1 -XYLA2	15					PT 2,5
											5					/196.3B								

Index	Revision	Date	name
1	Final as built	19-3-2025	M.Besseling

Drawn:	31-10-2024	elshofjo
Engineer:	19-9-2024	besselingmi
Approved:		
Changed:		

KANON LOADING EQUIPMENT B.V.

Ref: P242068, B242352 Quote:

Order: 2011280786 Item: 001000

KANON LOADING EQUIPMENT

www.kanon.nl

Electromach BV
Jan Tinbergenstraat 193
7559 SP Hengelo
The Netherlands
US

Terminal diagram

Int. Revision :

Drawing No.:
2011280786-001000-24

Refer to protection notice ISO 16016

P242068A91

+JOCC-DCB1-Xint3

Scale: 1 mm : 1 mm / A3

Sheet: 335 page 1 / 1

Terminal diagram

+JOCC-DCB1-Xint11

External cable	General remarks	Terminal block : -Xint11						Number of terminals : 2		Internal cable
	External destination	Terminal number	Wire jumper	Jumper	Terminal type	Terminal number	Cross-reference	Internal destination		
Comment	Device / Pin							Pin / Device		Comment
	-DCB1 -77S3 / 2	**1**			PT 2,5		/77.3D	1 / -DCB1 -77F3.2		
	-DCB1 -77F3.2 / 2	**2**			PT 2,5		/77.3D	1 / -DCB1 -77E3		

Index	Revision	Date	name				
2	Final as built	19-3-2025	M.Besseling	Drawn:	31-10-2024	elshofjo	
1	For approval	13-11-2024	besselingmi	Engineer:	19-9-2024	besselingmi	
				Approved:			
				Changed:			

KANON LOADING EQUIPMENT B.V.

Ref: P242068, B242352 Quote:

Order: 2011280786 Item: 001000

KANON LOADING EQUIPMENT

www.kanon.nl

Electromach BV
Jan Tinbergenstraat 193
7559 SP Hengelo
The Netherlands
US

Terminal diagram

Int. Revision :

Drawing No.: 2011280786-001000-24

Refer to protection notice ISO 16016

P242068A91

+JOCC-DCB1-Xint11

Scale: 1 mm : 1 mm / A3

Sheet: 336 page 1 / 1

Terminal diagram

+JOCC-DCB1-Xint24+

General remarks

Terminal block :

-Xint24+

Number of terminals :

2

External cable									General remarks		Terminal block : -Xint24+						Number of terminals : 2							Internal cable
									External destination		Terminal number	Wire jumper	Jumper	Terminal type	Terminal number	Cross-reference	Internal destination		Schwarz 6mm²					
Comment									Device	Pin							Pin	Device						Comment
											1			PT 6		/80.1A								
											2			PT 6		/80.1A	1	-DCB2 -Xint24+	1					PT 6

Index	Revision	Date	name							
2	Final as built	19-3-2025	M.Besseling	Drawn:	31-10-2024	elshofjo	**KANON LOADING EQUIPMENT B.V.**			
1	For approval	13-11-2024	besselingmi	Engineer:	19-9-2024	besselingmi				
				Approved:			Ref: P242068, B242352	Quote:		
				Changed:			Order: 2011280786	Item: 001000		

KANON LOADING EQUIPMENT

www.kanon.nl

Electromach BV
Jan Tinbergenstraat 193
7559 SP Hengelo
The Netherlands

Terminal diagram

Int. Revision :	P242068A91
Drawing No.: 2011280786-001000-24	+JOCC-DCB1-Xint24+
Refer to protection notice ISO 16016	Scale: 1 mm : 1 mm / A3
	Sheet: 337 page 1 / 1

Terminal diagram

+JOCC-DCB1-Xint24-

External cable									General remarks		Terminal block : -Xint24-						Number of terminals : 2								Internal cable
									External destination								Internal destination								
Comment									Device	Pin	Terminal number	Wire jumper	Jumper	Terminal type	Terminal number	Cross-reference	Pin	Device	Schwarz 6mm²						Comment
											1			PT 6		/80.1C	1	-DCB1 -Xint-							PT 2,5
											2			PT 6		/80.1C	1	-DCB2 -Xint24-	2						PT 6

Index	Revision	Date	name										
2	Final as built	19-3-2025	M.Besseling	Drawn:	31-10-2024	elshofjo	KANON LOADING EQUIPMENT B.V.		KANON LOADING EQUIPMENT www.kanon.nl	Electromach BV Jan Tinbergenstraat 193 7559 SP Hengelo The Netherlands	Terminal diagram	Int. Revision :	P242068A91
1	For approval	13-11-2024	besselingmi	Engineer:	19-9-2024	besselingmi						Drawing No.: 2011280786-001000-24	+JOCC-DCB1-Xint24-
				Approved:			Ref: P242068, B242352	Quote:					Scale: 1 mm : 1 mm / A3
				Changed:			Order: 2011280786	Item: 001000				Refer to protection notice ISO 16016	Sheet: 338 page 1 / 1

Terminal diagram

+JOCC-DCB1-Xint115L

External cable									General remarks		Terminal block : -Xint115L						Number of terminals : 2		Schwarz 2,5mm²					Internal cable
									External destination		Terminal number	Wire jumper	Jumper	Terminal type	Terminal number	Cross-reference	Internal destination							
Comment									Device	Pin							Pin	Device						Comment
ontrol supply solenoid(s) HPP									-DCB1 -115V -78F3	1	1			PT 2,5		/76.1A	2/T1	-DCB1 -75F9.2						
											2			PT 2,5		/76.1A	1	-DCB2 -Xint115L	1					PT 2,5

Index	Revision	Date	name
2	Final as built	19-3-2025	M.Besseling
1	For approval	13-11-2024	besselingmi

Drawn:	31-10-2024	elshofjo	
Engineer:	19-9-2024	besselingmi	
Approved:			
Changed:			

KANON LOADING EQUIPMENT B.V.

Ref: P242068, B242352 Quote:

Order: 2011280786 Item: 001000

KANON LOADING EQUIPMENT

www.kanon.nl

Electromach BV
Jan Tinbergenstraat 193
7559 SP Hengelo
The Netherlands

Terminal diagram

Int. Revision :

Drawing No.:
2011280786-001000-24

Refer to protection notice ISO 16016

P242068A91

+JOCC-DCB1-Xint115L

Scale: 1 mm : 1 mm / A3

Sheet: 339 page 1 / 1

Terminal diagram

+JOCC-DCB1-Xint115N

External cable									General remarks		Terminal block : -Xint115N						Number of terminals : 4		Schwarz 2,5mm²					Internal cable
									External destination		Terminal number	Wire jumper	Jumper	Terminal type	Terminal number	Cross-reference	Internal destination							
Comment									Device	Pin							Pin	Device						Comment
PT 2,5									-DCB1 -XintN	1	1			PT 2,5		/76.1C	6/T3	-DCB1 -75F9.2						
																	N	-DCB1 -77F1						
											2			PT 2,5		/76.1C	1	-DCB2 -Xint115N	2					PT 2,5
											PE			PT 2,5 PE										
											PE			PT 2,5 PE		/76.1C	PE	-DCB2 -Xint115N	12					PT 2,5 PE

Index	Revision	Date	name
2	Final as built	19-3-2025	M.Besseling
1	For approval	13-11-2024	besselingmi

Drawn:	31-10-2024	elshofjo	
Engineer:	19-9-2024	besselingmi	
Approved:			
Changed:			

KANON LOADING EQUIPMENT B.V.

Ref:	P242068, B242352	Quote:	
Order:	2011280786	Item:	001000

KANON LOADING EQUIPMENT
www.kanon.nl

Electromach BV
Jan Tinbergenstraat 193
7559 SP Hengelo
The Netherlands

Terminal diagram

Int. Revision :	P242068A91
Drawing No.: 2011280786-001000-24	+JOCC-DCB1-Xint115N
	Scale: 1 mm : 1 mm / A3
Refer to protection notice ISO 16016	Sheet: 340 page 1 / 1

Terminal diagram

+JOCC-DCB1-Xint-

External cable Comment	General remarks External destination Device	Pin	Terminal block : -Xint- Terminal number	Wire jumper	Jumper	Terminal type	Terminal number	Cross-reference	Number of terminals : 7 Internal destination Pin	Device	Schwarz 0,75mm²	Internal cable Comment
PT 6	-DCB1 -Xint24-	1	1			PT 2,5		/81.2A	2	-DCB1 -Xint1		PT 2,5
			2			PT 2,5		/81.4A				
			3			PT 2,5		/81.5A				
			4			PT 2,5		/81.9A	3	-ECB2 -X4	46	PT 2,5
			5			PT 2,5		/82.1B	7	-ETB1 -XYLA1	7	PT 2,5
			6			PT 2,5		/82.2B	7	-ETB1 -XYLA2	19	PT 2,5
			7			PT 2,5		/82.3B				

Index	Revision	Date	name				
2	Final as built	19-3-2025	M.Besseling	Drawn:	31-10-2024	elshofjo	
1	For approval	13-11-2024	besselingmi	Engineer:	19-9-2024	besselingmi	
				Approved:			
				Changed:			

KANON LOADING EQUIPMENT B.V.

Ref: P242068, B242352 Quote:

Order: 2011280786 Item: 001000

KANON LOADING EQUIPMENT

www.kanon.nl

Electromach BV
Jan Tinbergenstraat 193
7559 SP Hengelo
The Netherlands
US

Terminal diagram

Int. Revision :

Drawing No.: 2011280786-001000-24

Refer to protection notice ISO 16016

P242068A91

+JOCC-DCB1-Xint-

Scale: 1 mm : 1 mm / A3

Sheet: 341 page 1 / 1

Terminal diagram

+JOCC-DCB1-XintN

External cable									General remarks		Terminal block : -XintN						Number of terminals : 7							Internal cable
									External destination								Internal destination							
Comment									Device	Pin	Terminal number	Wire jumper	Jumper	Terminal type	Terminal number	Cross-reference	Pin	Device						Comment
PT 2,5									-DCB1 -Xint115N	1	1	●		PT 2,5		/77.3B	2	-DCB1 -77E3						
											2	●		PT 2,5		/77.4B	A2	-DCB1 -89K2						
											3	●		PT 2,5		/77.6B	N/-	-DCB1 -77U6.1						
											4	●		PT 2,5		/77.8B								
											5	●		PT 2,5		/78.1B								
											6	●		PT 2,5		/78.2B								
											7	●		PT 2,5		/78.3B								

Index	Revision	Date	name										
2	Final as built	19-3-2025	M.Besseling	Drawn:	31-10-2024	elshofjo	KANON LOADING EQUIPMENT B.V.		KANON LOADING EQUIPMENT	Electromach BV	Terminal diagram	Int. Revision :	P242068A91
1	For approval	13-11-2024	besselingmi	Engineer:	19-9-2024	besselingmi			www.kanon.nl	Jan Tinbergenstraat 193		Drawing No.:	+JOCC-DCB1-XintN
				Approved:			Ref: P242068, B242352	Quote:		7559 SP Hengelo		2011280786-001000-24	Scale: 1 mm : 1 mm / A3
				Changed:			Order: 2011280786	Item: 001000		The Netherlands		Refer to protection notice ISO 16016	Sheet: 342 page 1 / 1

Terminal diagram

+JOCC-DCB1-XintN'

External cable									General remarks		Terminal block : -XintN'						Number of terminals : 4		Schwarz 0,75mm²					Internal cable
									External destination		Terminal number	Wire jumper	Jumper	Terminal type	Terminal number	Cross-reference	Internal destination							
Comment									Device	Pin							Pin	Device						Comment
											5			PT 2,5		/78.1C	18	-ETB1 -XLA1	18					PT 2,5
											6			PT 2,5		/78.2C	18	-ETB1 -XLA2	18					PT 2,5
											7			PT 2,5		/78.3C								
											PE			PT 6 PE										

Index	Revision	Date	name						
1	Final as built	19-3-2025	M.Besseling	Drawn:	31-10-2024	elshofjo	**KANON LOADING EQUIPMENT B.V.**		
				Engineer:	19-9-2024	besselingmi			
				Approved:			Ref: P242068, B242352	Quote:	
				Changed:			Order: 2011280786	Item: 001000	

KANON LOADING EQUIPMENT
www.kanon.nl

Electromach BV
Jan Tinbergenstraat 193
7559 SP Hengelo
The Netherlands
US

Terminal diagram

Int. Revision :	P242068A91
Drawing No.: 2011280786-001000-24	+JOCC-DCB1-XintN'
	Scale: 1 mm : 1 mm / A3
Refer to protection notice ISO 16016	Sheet: 343 page 1 / 1

Terminal diagram

+JOCC-DCB1-Xint6

External cable								Schwarz 0,75mm²	General remarks		Terminal block : -Xint6						Number of terminals : 4		Schwarz 0,75mm²					Internal cable
									External destination		Terminal number	Wire jumper	Jumper	Terminal type	Terminal number	Cross-reference	Internal destination							
Comment									Device	Pin							Pin	Device						Comment
PT 2,5								23	-ETB1 -XERC	2	1			PT 2,5		/160.2D	I1	-DCB2 -96U4 IN 1	19					
PT 2,5								24	-ETB1 -XERC	4	2			PT 2,5		/160.3D	I2	-DCB2 -96U4 IN 2	20					
											3			PT 2,5		/134.3B	3	-DCB2 -Xint10	5					PT 2,5
											4			PT 2,5		/134.3B	IN 2	-DCB2 -94U2 IN 2	6					

Index	Revision	Date	name
1	Final as built	19-3-2025	M.Besseling

Drawn:	31-10-2024	elshofjo	
Engineer:	19-9-2024	besselingmi	
Approved:			
Changed:			

KANON LOADING EQUIPMENT B.V.

Ref:	P242068, B242352	Quote:	
Order:	2011280786	Item:	001000

KANON LOADING EQUIPMENT

www.kanon.nl

Electromach BV
Jan Tinbergenstraat 193
7559 SP Hengelo
The Netherlands
US

Terminal diagram

Int. Revision :	P242068A91
Drawing No.: 2011280786-001000-24	+JOCC-DCB1-Xint6
	Scale: 1 mm : 1 mm / A3
Refer to protection notice ISO 16016	Sheet: 344 page 1 / 1

Terminal diagram

+JOCC-DCB2-XPE

External cable									General remarks		Terminal block : -XPE						Number of terminals : 8							Internal cable
									External destination		Terminal number	Wire jumper	Jumper	Terminal type	Terminal number	Cross-reference	Internal destination							
Comment									Device	Pin							Pin	Device						Comment
									-DCB2 -94U3	GND (PE)	**PE**			PT 6 PE		/94.4A	PE	-DCB2						
											PE			PT 6 PE										
									-DCB2	PE	**PE**			PT 6 PE		/79.1E	PE	-DCB2 -79E1						
											PE			PT 2,5 PE										
											PE			PT 2,5 PE										
											PE			PT 2,5 PE										
											PE			PT 2,5 PE										
											PE			PT 2,5 PE										

Index	Revision	Date	name							
2	Final as built	19-3-2025	M.Besseling	Drawn:	31-10-2024	elshofjo	**KANON LOADING EQUIPMENT B.V.**			
1	For approval	13-11-2024	besselingmi	Engineer:	19-9-2024	besselingmi				
				Approved:			Ref: P242068, B242352	Quote:		
				Changed:			Order: 2011280786	Item: 001000		

KANON LOADING EQUIPMENT

www.kanon.nl

Electromach BV
Jan Tinbergenstraat 193
7559 SP Hengelo
The Netherlands

Terminal diagram

Int. Revision :	P242068A91
Drawing No.: 2011280786-001000-24	+JOCC-DCB2-XPE
	Scale: 1 mm : 1 mm / A3
Refer to protection notice ISO 16016	Sheet: 345 page 1 / 1

Terminal diagram

+JOCC-DCB2-Xint10

External cable								Schwarz 0,75mm²	General remarks		Terminal block : -Xint10						Number of terminals : 15		Schwarz 0,75mm²					Internal cable
									External destination		Terminal number	Wire jumper	Jumper	Terminal type	Terminal number	Cross-reference	Internal destination							
Comment									Device	Pin							Pin	Device						Comment
PT 2,5								22	-ETB1 -X019	22	1			PT 2,5		/86.1B	1	-ECB2 -XCP3	1					PT 2,5
PT 2,5									-ETB1 -XERC	3	2			PT 2,5		/86.1B	1	-ETB1 -XERC	19					PT 2,5
24VDC Control supply inputs									-DCB2 -86F2	2	3			PT 2,5		/86.2B	3	-DCB1 -Xint6	5					PT 2,5
PT 2,5									-DCB2 -Xint-	1	4			PT 2,5		/86.2B	DC COM 4	-DCB2 -94U6						
											5			PT 2,5		/86.2B								
											6			PT 2,5		/87.1B	2	-ECB2 -XCP3	2					PT 2,5
									-DCB2 -96U4	24V DC	7			PT 2,5		/87.2B	2	-DCB2 -87F2					24VDC	Control supply fail-safe I/O Modu
											8			PT 2,5		/87.2B	13	-DCB1 -190K2	1					
											9			PT 2,5		/87.3B	2	-DCB2 -87F3					24VDC	Control supply fail-safe I/O Modu
PT 2,5									-DCB2 -Xint-	7	10			PT 2,5		/87.3B	0V DC	-DCB2 -96U6						
											11			PT 2,5		/87.3B	A2	-DCB1 -163K4	2					
											12			PT 2,5		/87.5B	13	-DCB1 -195K2	3					
											13			PT 2,5		/87.6B	2	-DCB2 -87F6					24VDC	Control supply fail-safe I/O Modu
PT 2,5									-DCB2 -Xint-	10	14			PT 2,5		/87.6B	0V DC	-DCB2 -97U2						
											15			PT 2,5		/87.6B	A2	-DCB1 -169K4	4					

Index	Revision	Date	name
2	Final as built	19-3-2025	M.Besseling
1	For approval	13-11-2024	besselingmi

Drawn:	31-10-2024	elshofjo	
Engineer:	19-9-2024	besselingmi	
Approved:			
Changed:			

KANON LOADING EQUIPMENT B.V.

Ref: P242068, B242352 Quote:

Order: 2011280786 Item: 001000

KANON LOADING EQUIPMENT

www.kanon.nl

Electromach BV
Jan Tinbergenstraat 193
7559 SP Hengelo
The Netherlands
US

Terminal diagram

Int. Revision :

Drawing No.:
2011280786-001000-24

Refer to protection notice ISO 16016

P242068A91

+JOCC-DCB2-Xint10

Scale: 1 mm : 1 mm / A3

Sheet: 346 page 1 / 1

Terminal diagram

+JOCC-DCB2-Xint12

External cable									General remarks		Terminal block : -Xint12						Number of terminals : 2							Internal cable
									External destination		Terminal number	Wire jumper	Jumper	Terminal type	Terminal number	Cross-reference	Internal destination							
Comment									Device	Pin							Pin	Device						Comment
									-DCB2 -79S1	2	**1**			PT 2,5		/79.1D	1	-DCB2 -79F1.2						
									-DCB2 -79F1.2	2	**2**			PT 2,5		/79.1D	1	-DCB2 -79E1						

Index	Revision	Date	name
2	Final as built	19-3-2025	M.Besseling
1	For approval	13-11-2024	besselingmi

Drawn:	31-10-2024	elshofjo	
Engineer:	19-9-2024	besselingmi	
Approved:			
Changed:			

KANON LOADING EQUIPMENT B.V.

Ref:	P242068, B242352	Quote:	
Order:	2011280786	Item:	001000

KANON LOADING EQUIPMENT

www.kanon.nl

Electromach BV
Jan Tinbergenstraat 193
7559 SP Hengelo
The Netherlands
US

Terminal diagram

Int. Revision :	P242068A91
Drawing No.: 2011280786-001000-24	+JOCC-DCB2-Xint12
	Scale: 1 mm : 1 mm / A3
Refer to protection notice ISO 16016	Sheet: 347 page 1 / 1

Terminal diagram

+JOCC-DCB2-Xint24+

External cable									General remarks		Terminal block : -Xint24+						Number of terminals : 2		Schwarz 6mm²					Internal cable
									External destination		Terminal number	Wire jumper	Jumper	Terminal type	Terminal number	Cross-reference	Internal destination							
Comment									Device	Pin							Pin	Device						Comment
l supply fail-safe I/O Module 7									-DCB2 -87F8	1	1			PT 6		/80.2A	2	-DCB1 -Xint24+	1					PT 6
											2			PT 6		/80.3A								

Index	Revision	Date	name							
2	Final as built	19-3-2025	M.Besseling	Drawn:	31-10-2024	elshofjo	**KANON LOADING EQUIPMENT B.V.**			
1	For approval	13-11-2024	besselingmi	Engineer:	19-9-2024	besselingmi				
				Approved:			Ref: P242068, B242352	Quote:		
				Changed:			Order: 2011280786	Item: 001000		

KANON LOADING EQUIPMENT
www.kanon.nl

Electromach BV
Jan Tinbergenstraat 193
7559 SP Hengelo
The Netherlands

Terminal diagram

Int. Revision :
Drawing No.: 2011280786-001000-24
Refer to protection notice ISO 16016

P242068A91
+JOCC-DCB2-Xint24+
Scale: 1 mm : 1 mm / A3
Sheet: 348 page 1 / 1

Terminal diagram

+JOCC-DCB2-Xint24-

External cable									General remarks		Terminal block : -Xint24-						Number of terminals : 2		Schwarz 6mm²					Internal cable
									External destination		Terminal number	Wire jumper	Jumper	Terminal type	Terminal number	Cross-reference	Internal destination							
Comment									Device	Pin							Pin	Device						Comment
PT 2,5									-DCB2 -Xint-	1	1			PT 6		/80.2C	2	-DCB1 -Xint24-	2					PT 6
											2			PT 6		/80.3C								

Index	Revision	Date	name					
2	Final as built	19-3-2025	M.Besseling	Drawn:	31-10-2024	elshofjo	**KANON LOADING EQUIPMENT B.V.**	
1	For approval	13-11-2024	besselingmi	Engineer:	19-9-2024	besselingmi		
				Approved:			Ref: P242068, B242352	Quote:
				Changed:			Order: 2011280786	Item: 001000

KANON LOADING EQUIPMENT
www.kanon.nl

Electromach BV
Jan Tinbergenstraat 193
7559 SP Hengelo
The Netherlands

Terminal diagram

Int. Revision :
Drawing No.: 2011280786-001000-24
Refer to protection notice ISO 16016

P242068A91
+JOCC-DCB2-Xint24-
Scale: 1 mm : 1 mm / A3
Sheet: 349 page 1 / 1

Terminal diagram

+JOCC-DCB2-Xint115L

External cable									General remarks		Terminal block : -Xint115L						Number of terminals : 2		Schwarz 2,5mm²					Internal cable
									External destination		Terminal number	Wire jumper	Jumper	Terminal type	Terminal number	Cross-reference	Internal destination							
Comment									Device	Pin							Pin	Device						Comment
spare									-DCB2 -79F3	1	1			PT 2,5		/76.2A	2	-DCB1 -Xint115L	1					PT 2,5
											2			PT 2,5		/76.3A								

Index	Revision	Date	name							
2	Final as built	19-3-2025	M.Besseling	Drawn:	31-10-2024	elshofjo	**KANON LOADING EQUIPMENT B.V.**			
1	For approval	13-11-2024	besselingmi	Engineer:	19-9-2024	besselingmi				
				Approved:			Ref: P242068, B242352	Quote:		
				Changed:			Order: 2011280786	Item: 001000		

KANON LOADING EQUIPMENT
www.kanon.nl

Electromach BV
Jan Tinbergenstraat 193
7559 SP Hengelo
The Netherlands

Terminal diagram

Int. Revision :	P242068A91
Drawing No.: 2011280786-001000-24	+JOCC-DCB2-Xint115L
	Scale: 1 mm : 1 mm / A3
Refer to protection notice ISO 16016	Sheet: 350 page 1 / 1

Terminal diagram

+JOCC-DCB2-Xint115N

External cable Comment	General remarks / External destination Device	Pin	Terminal block : -Xint115N Terminal number	Wire jumper	Jumper	Terminal type	Terminal number	Cross-reference	Number of terminals : 3 Internal destination Pin	Device	Schwarz 2,5mm²	Internal cable Comment
PT 2,5	-DCB2 -XintN	1	**1**	●		PT 2,5		/76.2C	2	-DCB1 -Xint115N	2	PT 2,5
			2	●		PT 2,5		/76.3C				
			PE			PT 2,5 PE		/76.3C	PE	-DCB1 -Xint115N	12	PT 2,5 PE

Index	Revision	Date	name			
2	Final as built	19-3-2025	M.Besseling	Drawn:	31-10-2024	elshofjo
1	For approval	13-11-2024	besselingmi	Engineer:	19-9-2024	besselingmi
				Approved:		
				Changed:		

KANON LOADING EQUIPMENT B.V.

Ref: P242068, B242352 Quote:

Order: 2011280786 Item: 001000

KANON LOADING EQUIPMENT

www.kanon.nl

Electromach BV
Jan Tinbergenstraat 193
7559 SP Hengelo
The Netherlands

Terminal diagram

Int. Revision :

Drawing No.:
2011280786-001000-24

Refer to protection notice ISO 16016

P242068A91

+JOCC-DCB2-Xint115N

Scale: 1 mm : 1 mm / A3

Sheet: 351 page 1 / 1

Terminal diagram

+JOCC-DCB2-Xint-

External cable Comment	General remarks External destination Device	Pin	Terminal block : -Xint- Terminal number	Wire jumper	Jumper	Terminal type	Terminal number	Cross-reference	Number of terminals : 12 Internal destination Pin	Device	Schwarz 0,75mm²	Internal cable Comment
PT 6	-DCB2 -Xint24-	1	**1**			PT 2,5		/86.2A	4	-DCB2 -Xint10		PT 2,5
			2			PT 2,5		/86.5A	24	-ETB1 -X019	24	PT 2,5
			3			PT 2,5		/86.7A	dc NEUTRAL	-DCB2 -94U3		
			4			PT 2,5		/86.8A	3-	-DCB2 -86U8		9193/21-11-11s
			5			PT 2,5		/87.1A	0V DC	-DCB2 -96U3		
			6			PT 2,5		/87.2A	0V DC	-DCB2 -96U4		
			7			PT 2,5		/87.3A	10	-DCB2 -Xint10		PT 2,5
			8			PT 2,5		/87.4A	0V DC	-DCB2 -96U7		
			9			PT 2,5		/87.5A	0V DC	-DCB2 -97U1		
			10			PT 2,5		/87.6A	14	-DCB2 -Xint10		PT 2,5
			11			PT 2,5		/87.7A	0V DC	-DCB2 -97U4		
			12			PT 2,5		/87.8A	0V DC	-DCB2 -97U5		

Index	Revision	Date	name
2	Final as built	19-3-2025	M.Besseling
1	For approval	13-11-2024	besselingmi

Drawn:	31-10-2024	elshofjo	
Engineer:	19-9-2024	besselingmi	
Approved:			
Changed:			

KANON LOADING EQUIPMENT B.V.

Ref: P242068, B242352 Quote:

Order: 2011280786 Item: 001000

KANON LOADING EQUIPMENT

www.kanon.nl

Electromach BV
Jan Tinbergenstraat 193
7559 SP Hengelo
The Netherlands
US

Terminal diagram

Int. Revision :

Drawing No.: 2011280786-001000-24

Refer to protection notice ISO 16016

P242068A91

+JOCC-DCB2-Xint-

Scale: 1 mm : 1 mm / A3

Sheet: 352 page 1 / 1

Terminal diagram

+JOCC-DCB2-XintN

External cable									General remarks		Terminal block : -XintN						Number of terminals : 2							Internal cable
									External destination		Terminal number	Wire jumper	Jumper	Terminal type	Terminal number	Cross-reference	Internal destination							
Comment									Device	Pin							Pin	Device						Comment
PT 2,5									-DCB2 -Xint115N	1	1			PT 2,5		/79.1B	2	-DCB2 -79E1						
											2			PT 2,5		/79.3B								

Index	Revision	Date	name												
2	Final as built	19-3-2025	M.Besseling	Drawn:	31-10-2024	elshofjo	KANON LOADING EQUIPMENT B.V.		KANON LOADING EQUIPMENT	Electromach BV	Terminal diagram	Int. Revision :	P242068A91
1	For approval	13-11-2024	besselingmi	Engineer:	19-9-2024	besselingmi			www.kanon.nl	Jan Tinbergenstraat 193		Drawing No.:	+JOCC-DCB2-XintN
				Approved:			Ref: P242068, B242352	Quote:		7559 SP Hengelo		2011280786-001000-24	Scale: 1 mm : 1 mm / A3
				Changed:			Order: 2011280786	Item: 001000		The Netherlands		Refer to protection notice ISO 16016	Sheet: 353 page 1 / 1

Terminal diagram

+HPP-JB14-X14

External cable								+JETTY-W014 OZ-BL-CY 18 x 0,75 mm²	General remarks		Terminal block : -X14						Number of terminals : 21		-W014A1 OZ-BL-CY 18 x 0,75 mm²					Internal cable
									External destination		Terminal number	Wire jumper	Jumper	Terminal type	Terminal number	Cross-reference	Internal destination						
Comment									Device	Pin							Pin	Device						Comment
														PT 4										
PT 2,5 BU								1	-ETB2 -Xi14	1	**1**			PT 2,5 BU		/254.0D	BN	-Pendant -254S1.1	1					
																	BN	-Pendant -254S1.2						
PT 2,5 BU								2	-ETB2 -Xi14	2	**2**			PT 2,5 BU		/254.1D	BU	-Pendant -254S1.1	2					
PT 2,5 BU								3	-ETB2 -Xi14	3	**3**			PT 2,5 BU		/254.1D	BU	-Pendant -254S1.2	3					
PT 2,5 BU								4	-ETB2 -Xi14	4	**4**			PT 2,5 BU		/254.2D	BN	-Pendant -254S2	4					
																	BN	-Pendant -254S3						
PT 2,5 BU								5	-ETB2 -Xi14	5	**5**			PT 2,5 BU		/254.2D	BU	-Pendant -254S2	5					
PT 2,5 BU								6	-ETB2 -Xi14	6	**6**			PT 2,5 BU		/254.3D	BU	-Pendant -254S3	6					
PT 2,5 BU								7	-ETB2 -Xi14	7	**7**			PT 2,5 BU		/254.3D	BN	-Pendant -254S4.1	7					
																	BN	-Pendant -254S4.2						
PT 2,5 BU								8	-ETB2 -Xi14	8	**8**			PT 2,5 BU		/254.4D	BU	-Pendant -254S4.1	8					
PT 2,5 BU								9	-ETB2 -Xi14	9	**9**			PT 2,5 BU		/254.4D	BU	-Pendant -254S4.2	9					
PT 2,5 BU								10	-ETB2 -Xi14	10	**10**			PT 2,5 BU		/254.5D	BN	-Pendant -254S5	10					
																	BN	-Pendant -254S6						
PT 2,5 BU								11	-ETB2 -Xi14	11	**11**			PT 2,5 BU		/254.5D	BU	-Pendant -254S5	11					
PT 2,5 BU								12	-ETB2 -Xi14	12	**12**			PT 2,5 BU		/254.6D	BU	-Pendant -254S6	12					
PT 2,5 BU								13	-ETB2 -Xi14	13	**13**			PT 2,5 BU		/254.6D	BN	-Pendant -254S7.1	13					
																	BN	-Pendant -254S7.2						
PT 2,5 BU								14	-ETB2 -Xi14	14	**14**			PT 2,5 BU		/254.7D	BU	-Pendant -254S7.1	14					
PT 2,5 BU								15	-ETB2 -Xi14	15	**15**			PT 2,5 BU		/254.7D	BU	-Pendant -254S7.2	15					
PT 2,5 BU								16	-ETB2 -Xi14	16	**16**			PT 2,5 BU		/254.8D	BN	-Pendant -254S8	16					
																	BN	-Pendant -254S9						
PT 2,5 BU								17	-ETB2 -Xi14	17	**17**			PT 2,5 BU		/254.8D	BU	-Pendant -254S8	17					
PT 2,5 BU								18	-ETB2 -Xi14	18	**18**			PT 2,5 BU		/254.9D	BU	-Pendant -254S9	18					
											TE			PT 4-FE		/254.9D		-Pendant	S					
								S	-ETB2	TE	**TE**			PT 4-FE		/254.9D								

Index	Revision	Date	name				
2	Final as built	19-3-2025	M.Besseling	Drawn:	31-10-2024	elshofjo	
1	For approval	13-11-2024	besselingmi	Engineer:	19-9-2024	besselingmi	
				Approved:			
				Changed:			

KANON LOADING EQUIPMENT B.V.

Ref: P242068, B242352 | Quote:

Order: 2011280786 | Item: 001000

KANON LOADING EQUIPMENT

www.kanon.nl

Electromach BV
Jan Tinbergenstraat 193
7559 SP Hengelo
The Netherlands

Terminal diagram

Int. Revision :

Drawing No.: 2011280786-001000-24

Refer to protection notice ISO 16016

P242068A91

+HPP-JB14-X14

Scale: 1 mm : 1 mm / A3

Sheet: 354 page 1 / 1

Terminal diagram

+HPP-JB15-X15

External cable					-W015A4 OZ-BL-CY 2 x 0,75 mm²	-W015A3 OZ-BL-CY 2 x 0,75 mm²	-W015A2 OZ-BL-CY 2 x 0,75 mm²	-W015A1 OZ-BL-CY 2 x 0,75 mm²	General remarks		Terminal block : -X15						Number of terminals : 12		+JETTY -W015 OZ-BL-CY 8 x 0,75 mm²					Internal cable
Comment									External destination		Terminal number	Wire jumper	Jumper	Terminal type	Terminal number	Cross-reference	Internal destination						Comment
									Device	Pin							Pin	Device					
								1	-251S1	1	1			PT 2,5 BU		/251.1C	1	-ETB2 -Xi15	1				PT 2,5 BU
								2	-251S1	2	2			PT 2,5 BU		/251.1C	2	-ETB2 -Xi15	2				PT 2,5 BU
							1		-251S2	3	3			PT 2,5 BU		/251.2C	3	-ETB2 -Xi15	3				PT 2,5 BU
							2		-251S2	2	4			PT 2,5 BU		/251.2C	4	-ETB2 -Xi15	4				PT 2,5 BU
						1			-251S3	3	5			PT 2,5 BU		/251.3C	5	-ETB2 -Xi15	5				PT 2,5 BU
						2			-251S3	2	6			PT 2,5 BU		/251.3C	6	-ETB2 -Xi15	6				PT 2,5 BU
					1				-Y15	BN	7			PT 2,5 BU		/251.4C	7	-ETB2 -Xi15	7				PT 2,5 BU
					2				-Y15	BU	8			PT 2,5 BU		/251.4C	8	-ETB2 -Xi15	8				PT 2,5 BU
								S	-251S1		S			PT 4-FE		/251.5C	TE	-ETB2	S				
							S		-251S2		S			PT 4-FE		/251.6C							
						S			-251S3		S			PT 4-FE		/251.6C							
					S				-Y15		S			PT 4-FE		/251.7C							

2	Final as built	19-3-2025	M.Besseling	Drawn:	31-10-2024	elshofjo	**KANON LOADING EQUIPMENT B.V.**
1	For approval	13-11-2024	besselingmi	Engineer:	19-9-2024	besselingmi	
				Approved:			Ref: P242068, B242352 Quote:
Index	Revision	Date	name	Changed:			Order: 2011280786 Item: 001000

KANON LOADING EQUIPMENT
www.kanon.nl

Electromach BV
Jan Tinbergenstraat 193
7559 SP Hengelo
The Netherlands

Terminal diagram

Int. Revision :	P242068A91
Drawing No.: 2011280786-001000-24	+HPP-JB15-X15
	Scale: 1 mm : 1 mm / A3
Refer to protection notice ISO 16016	Sheet: 355 page 1 / 1

Terminal diagram

+HPP-JB16-X16

External cable								-W016A1 H07RN-F4G6 4 x 6 mm²	General remarks		Terminal block : -X16						Number of terminals : 4		+JETTY -W016 VG-YMvKas Dca-s2 3 x 6 mm²					Internal cable
									External destination		Terminal number	Wire jumper	Jumper	Terminal type	Terminal number	Cross-reference	Internal destination						
Comment									Device	Pin							Pin	Device					Comment
									-JB16 -250S1	13	**1**			PT 6		/250.1C	1	-ETB1 -X016	1				PT 6
									-JB16 -250S1	23	**2**			PT 6		/250.1C	2	-ETB1 -X016	2				PT 6
									-JB16 -250S1	33	**3**			PT 6		/250.1C	3	-ETB1 -X016	3				PT 6
								PE	-250M1	PE	**PE**			PT 6 PE		/250.1C	PE	-ETB1 -X016	S				PT 6 PE

Index	Revision	Date	name			
2	Final as built	19-3-2025	M.Besseling	Drawn:	31-10-2024	elshofjo
1	For approval	13-11-2024	besselingmi	Engineer:	19-9-2024	besselingmi
				Approved:		
				Changed:		

KANON LOADING EQUIPMENT B.V.

Ref: P242068, B242352 Quote:

Order: 2011280786 Item: 001000

KANON LOADING EQUIPMENT

www.kanon.nl

Electromach BV
Jan Tinbergenstraat 193
7559 SP Hengelo
The Netherlands
US

Terminal diagram

Int. Revision :

Drawing No.:
2011280786-001000-24

Refer to protection notice ISO 16016

P242068A91

+HPP-JB16-X16

Scale: 1 mm : 1 mm / A3

Sheet: 356 page 1 / 1

Terminal diagram

+HPP-JB17-X17

External cable								-W017A1 H07RN-F4G6 4 x 6 mm²	General remarks		Terminal block : -X17						Number of terminals : 4		+JETTY -W017 VG-YMvKas Dca-s2 3 x 6 mm²					Internal cable
									External destination		Terminal number	Wire jumper	Jumper	Terminal type	Terminal number	Cross-reference	Internal destination							
Comment									Device	Pin							Pin	Device						Comment
									-JB17 -250S2	13	**1**			PT 6		/250.2C	1	-ETB1 -X017	1					PT 6
									-JB17 -250S2	23	**2**			PT 6		/250.2C	2	-ETB1 -X017	2					PT 6
									-JB17 -250S2	33	**3**			PT 6		/250.3C	3	-ETB1 -X017	3					PT 6
								PE	-250M2	PE	**PE**			PT 6 PE		/250.3C	PE	-ETB1 -X017	S					PT 6 PE

Index	Revision	Date	name				
2	Final as built	19-3-2025	M.Besseling	Drawn:	31-10-2024	elshofjo	**KANON LOADING EQUIPMENT B.V.**
1	For approval	13-11-2024	besselingmi	Engineer:	19-9-2024	besselingmi	
				Approved:			Ref: P242068, B242352 Quote:
				Changed:			Order: 2011280786 Item: 001000

KANON LOADING EQUIPMENT
www.kanon.nl

Electromach BV
Jan Tinbergenstraat 193
7559 SP Hengelo
The Netherlands
US

Terminal diagram

Int. Revision :
Drawing No.: 2011280786-001000-24
Refer to protection notice ISO 16016

P242068A91
+HPP-JB17-X17
Scale: 1 mm : 1 mm / A3
Sheet: 357 page 1 / 1

Terminal diagram

+HPP-JB18-X18

External cable							-W018A2 KVCY Dca 3 x 0,75 mm²	-W018A1 KVCY Dca 3 x 0,75 mm²	General remarks		Terminal block : -X18						Number of terminals : 8		+JETTY -W018 KVCY Dca 5 x 0,75 mm²					Internal cable
									External destination		Terminal number	Wire jumper	Jumper	Terminal type	Terminal number	Cross-reference	Internal destination							
Comment									Device	Pin							Pin	Device						Comment
								1	-Y10	1	**1**			PT 2,5		/250.7C	1	-ETB1 -X018	1					PT 2,5
								2	-Y10	3	**2**			PT 2,5		/250.7C	2	-ETB1 -X018	2					PT 2,5
							1		-Y15	1	**3**			PT 2,5		/250.8C	3	-ETB1 -X018	3					PT 2,5
							2		-Y15	3	**4**			PT 2,5		/250.8C	4	-ETB1 -X018	4					PT 2,5
								PE	-Y10	2	**PE**			PT 2,5 PE		/250.7C								
								S	-Y10	PE	**PE**			PT 2,5 PE		/250.7C								
							PE		-Y15	2	**PE**			PT 2,5 PE		/250.9C	PE	-ETB1	PE					
							S		-Y15	PE	**PE**			PT 2,5 PE		/250.9C	PE	-ETB1	S					

2	*Final as built*	*19-3-2025*	*M.Besseling*	Drawn:	*31-10-2024*	*elshofjo*	***KANON LOADING EQUIPMENT B.V.***		*Terminal diagram*
1	*For approval*	*13-11-2024*	*besselingmi*	Engineer:	*19-9-2024*	*besselingmi*			
				Approved:			Ref: *P242068, B242352*	Quote:	
Index	Revision	Date	name	Changed:			Order: *2011280786*	Item: *001000*	

www.kanon.nl

Electromach BV
Jan Tinbergenstraat 193
7559 SP Hengelo
The Netherlands

Int. Revision :	*P242068A91*
Drawing No.: *2011280786-001000-24*	*+HPP-JB18-X18*
	Scale: *1 mm : 1 mm / A3*
Refer to protection notice ISO 16016	Sheet: *358* page *1 / 1*

Terminal diagram

+HPP-JB19-X19

External cable								+JETTY -W019 KVCY Dca 25 x 0,75 mm²	General remarks		Terminal block : -X19						Number of terminals : 26		-W019A1 KVCY Dca 25 x 1,5 mm²					Internal cable
									External destination		Terminal number	Wire jumper	Jumper	Terminal type	Terminal number	Cross-reference	Internal destination							
Comment									Device	Pin							Pin	Device						Comment
											1			PT 2,5		/252.0D	1	-DRB1 -X19	1					PT 2,5
PT 2,5								2	-ETB1 -X019	2	**2**			PT 2,5		/252.1D	2	-DRB1 -X19	2					PT 2,5
PT 2,5								3	-ETB1 -X019	3	**3**			PT 2,5		/252.1D	3	-DRB1 -X19	3					PT 2,5
PT 2,5								4	-ETB1 -X019	4	**4**			PT 2,5		/252.1D	4	-DRB1 -X19	4					PT 2,5
PT 2,5								5	-ETB1 -X019	5	**5**			PT 2,5		/252.2D	5	-DRB1 -X19	5					PT 2,5
PT 2,5								6	-ETB1 -X019	6	**6**			PT 2,5		/252.2D	6	-DRB1 -X19	6					PT 2,5
PT 2,5								7	-ETB1 -X019	7	**7**			PT 2,5		/252.3D	7	-DRB1 -X19	7					PT 2,5
PT 2,5								8	-ETB1 -X019	8	**8**			PT 2,5		/252.3D	8	-DRB1 -X19	8					PT 2,5
PT 2,5								9	-ETB1 -X019	9	**9**			PT 2,5		/252.3D	9	-DRB1 -X19	9					PT 2,5
PT 2,5								10	-ETB1 -X019	10	**10**			PT 2,5		/252.4D	10	-DRB1 -X19	10					PT 2,5
PT 2,5								11	-ETB1 -X019	11	**11**			PT 2,5		/252.4D	11	-DRB1 -X19	11					PT 2,5
PT 2,5								12	-ETB1 -X019	12	**12**			PT 2,5		/252.5D	12	-DRB1 -X19	12					PT 2,5
PT 2,5								13	-ETB1 -X019	13	**13**			PT 2,5		/252.5D	13	-DRB1 -X19	13					PT 2,5
PT 2,5								14	-ETB1 -X019	14	**14**			PT 2,5		/252.5D	14	-DRB1 -X19	14					PT 2,5
PT 2,5								15	-ETB1 -X019	15	**15**			PT 2,5		/252.6D	15	-DRB1 -X19	15					PT 2,5
PT 2,5								16	-ETB1 -X019	16	**16**			PT 2,5		/252.6D	16	-DRB1 -X19	16					PT 2,5
PT 2,5								17	-ETB1 -X019	17	**17**			PT 2,5		/252.6D	17	-DRB1 -X19	17					PT 2,5
PT 2,5								18	-ETB1 -X019	18	**18**			PT 2,5		/252.7D	18	-DRB1 -X19	18					PT 2,5
PT 2,5								19	-ETB1 -X019	19	**19**			PT 2,5		/252.7D	19	-DRB1 -X19	19					PT 2,5
PT 2,5								20	-ETB1 -X019	20	**20**			PT 2,5		/252.7D	20	-DRB1 -X19	20					PT 2,5
PT 2,5								21	-ETB1 -X019	21	**21**			PT 2,5		/252.7D	21	-DRB1 -X19	21					PT 2,5
PT 2,5								22	-ETB1 -X019	22	**22**			PT 2,5		/252.8D	22	-DRB1 -X19	22					PT 2,5
PT 2,5								23	-ETB1 -X019	23	**23**			PT 2,5		/252.8D	23	-DRB1 -X19	23					PT 2,5
PT 2,5								24	-ETB1 -X019	24	**24**			PT 2,5		/252.8D	24	-DRB1 -X19	24					PT 2,5
								PE	-ETB1	PE	**PE**			PT 2,5 PE		/252.9D	PE	-DRB1 -X19	PE					PT 2,5 PE
								S	-ETB1	PE	**PE**			PT 10 PE		/252.9D	PE	-DRB1 -X19	S					PT 2,5 PE

Index	Revision	Date	name				
2	Final as built	19-3-2025	M.Besseling	Drawn:	31-10-2024	elshofjo	
1	For approval	13-11-2024	besselingmi	Engineer:	19-9-2024	besselingmi	
				Approved:			
				Changed:			

KANON LOADING EQUIPMENT B.V.

Ref: P242068, B242352 | Quote:

Order: 2011280786 | Item: 001000

KANON LOADING EQUIPMENT

www.kanon.nl

Electromach BV
Jan Tinbergenstraat 193
7559 SP Hengelo
The Netherlands
US

Terminal diagram

Int. Revision :

Drawing No.: 2011280786-001000-24

Refer to protection notice ISO 16016

P242068A91

+HPP-JB19-X19

Scale: 1 mm : 1 mm / A3

Sheet: 359 | page 1 / 1

Terminal diagram

+HPP-DRB1-X19

External cable								-W019A1 KVCY Dca 25 x 1,5 mm²	General remarks		Terminal block : -X19						Number of terminals : 26			-W019A1 KVCY Dca 25 x 1,5 mm²					Internal cable
									External destination		Terminal number	Wire jumper	Jumper	Terminal type	Terminal number	Cross-reference	Internal destination							
Comment									Device	Pin							Pin	Device						Comment
PT 2,5								1	-JB19 -X19	1	**1**			PT 2,5		/252.0C	43	-DRB1 -252U0 -X2	1					
PT 2,5								2	-JB19 -X19	2	**2**			PT 2,5		/252.1C	44	-DRB1 -252U0 -X2	2					
PT 2,5								3	-JB19 -X19	3	**3**			PT 2,5		/252.1C	45	-DRB1 -252U0 -X2	3					
PT 2,5								4	-JB19 -X19	4	**4**			PT 2,5		/252.1C	46	-DRB1 -252U0 -X2	4					
PT 2,5								5	-JB19 -X19	5	**5**			PT 2,5		/252.2C	47	-DRB1 -252U0 -X2	5					
PT 2,5								6	-JB19 -X19	6	**6**			PT 2,5		/252.2C	48	-DRB1 -252U0 -X2	6					
PT 2,5								7	-JB19 -X19	7	**7**			PT 2,5		/252.3C	49	-DRB1 -252U0 -X2	7					
PT 2,5								8	-JB19 -X19	8	**8**			PT 2,5		/252.3C	22	-DRB1 -252U0 -X2	8					
PT 2,5								9	-JB19 -X19	9	**9**			PT 2,5		/252.3C	23	-DRB1 -252U0 -X2	9					
PT 2,5								10	-JB19 -X19	10	**10**			PT 2,5		/252.4C	24	-DRB1 -252U0 -X2	10					
PT 2,5								11	-JB19 -X19	11	**11**			PT 2,5		/252.4C	25	-DRB1 -252U0 -X2	11					
PT 2,5								12	-JB19 -X19	12	**12**			PT 2,5		/252.5C	26	-DRB1 -252U0 -X2	12					
PT 2,5								13	-JB19 -X19	13	**13**			PT 2,5		/252.5C	41	-DRB1 -252U0 -X2	13					
PT 2,5								14	-JB19 -X19	14	**14**			PT 2,5		/252.5C	42	-DRB1 -252U0 -X2	14					
PT 2,5								15	-JB19 -X19	15	**15**			PT 2,5		/252.6C	15	-DRB1 -252U0 -X2	15					
PT 2,5								16	-JB19 -X19	16	**16**			PT 2,5		/252.6C		-DRB1 -252U0 -X2	16					
PT 2,5								17	-JB19 -X19	17	**17**			PT 2,5		/252.6C		-DRB1 -252U0 -X2	17					
PT 2,5								18	-JB19 -X19	18	**18**			PT 2,5		/252.7C		-DRB1 -252U0 -X2	18					
PT 2,5								19	-JB19 -X19	19	**19**			PT 2,5		/252.7C		-DRB1 -252U0 -X2	19					
PT 2,5								20	-JB19 -X19	20	**20**			PT 2,5		/252.7C		-DRB1 -252U0 -X2	20					
PT 2,5								21	-JB19 -X19	21	**21**			PT 2,5		/252.7C		-DRB1 -252U0 -X2	21					
PT 2,5								22	-JB19 -X19	22	**22**			PT 2,5		/252.8C	58	-DRB1 -252U0 -X2	22					
PT 2,5								23	-JB19 -X19	23	**23**			PT 2,5		/252.8C	64	-DRB1 -252U0 -X2	23					
PT 2,5								24	-JB19 -X19	24	**24**			PT 2,5		/252.8C	50	-DRB1 -252U0 -X2	24					
PT 2,5 PE								PE	-JB19 -X19	PE	**PE**			PT 2,5 PE		/252.9C	P1	-DRB1 -252U0 -X2	PE					
											PE			PT 2,5 PE		/252.9C	PE	-JB19 -X19		S				PT 10 PE

Index	Revision	Date	name				
2	Final as built	19-3-2025	M.Besseling	Drawn:	31-10-2024	elshofjo	
1	For approval	13-11-2024	besselingmi	Engineer:	19-9-2024	besselingmi	
				Approved:			
				Changed:			

KANON LOADING EQUIPMENT B.V.

Ref: P242068, B242352 | Quote:

Order: 2011280786 | Item: 001000

KANON LOADING EQUIPMENT

www.kanon.nl

Electromach BV
Jan Tinbergenstraat 193
7559 SP Hengelo
The Netherlands
US

Terminal diagram

Int. Revision :

Drawing No.: 2011280786-001000-24

Refer to protection notice ISO 16016

P242068A91

+HPP-DRB1-X19

Scale: 1 mm : 1 mm / A3

Sheet: 360 page 1 / 1

Terminal diagram

+MLA-A-JB1A-X1

External cable							-W112 OZ-BL-CY 25 x 0,75 mm²	-W111 OZ-BL-CY 8 x 0,75 mm²	General remarks		Terminal block : -X1						Number of terminals : 47		-W141 OZ-BL-CY 18 x 0,75 mm²	-W142 OZ-BL-CY 25 x 0,75 mm²				Internal cable
									External destination		Terminal number	Wire jumper	Jumper	Terminal type	Terminal number	Cross-reference	Internal destination							
Comment									Device	Pin							Pin	Device						Comment
PT 2,5 BU								1	-JB3A -X3	1	1			PT 2,5 BU		/11.1.0D	1,21	-JB4A -X4	1					PTTB 2,5 BU (bottom row)
PT 2,5 BU								2	-JB3A -X3	2	2			PT 2,5 BU		/11.1.1D	1,22	-JB4A -X4	2					(top row)
PT 2,5 BU								3	-JB3A -X3	3	3			PT 2,5 BU		/11.1.1D	3,43	-JB4A -X4	3					PTTB 2,5 BU (bottom row)
PT 2,5 BU								4	-JB3A -X3	4	4			PT 2,5 BU		/11.1.1D	3,44	-JB4A -X4	4					(top row)
PT 2,5 BU								5	-JB3A -X3	5	5			PT 2,5 BU		/11.1.1D	5,65	-JB4A -X4	5					PTTB 2,5 BU (bottom row)
PT 2,5 BU								6	-JB3A -X3	6	6			PT 2,5 BU		/11.1.1D	5,66	-JB4A -X4	6					(top row)
PT 2,5 BU								7	-JB3A -X3	7	7			PT 2,5 BU		/11.1.2D	7,87	-JB4A -X4	7					PTTB 2,5 BU (bottom row)
PT 2,5 BU								8	-JB3A -X3	8	8			PT 2,5 BU		/11.1.2D	7,88	-JB4A -X4	8					(top row)
									-11S4.1	BN	9			PT 2,5 BU		/11.1.2D	9,109	-JB4A -X4	9					PTTB 2,5 BU (bottom row)
									-11S4.1	BU	10			PT 2,5 BU		/11.1.2D	9,1010	-JB4A -X4	10					(top row)
									-11S4.3	BN	11			PT 2,5 BU		/11.1.2D	11,1211	-JB4A -X4	11					PTTB 2,5 BU (bottom row)
									-11S4.3	BU	12			PT 2,5 BU		/11.1.3D	11,1212	-JB4A -X4	12					(top row)
									-11S5.1	BN	13			PT 2,5 BU		/11.1.3D	13,1413	-JB4A -X4	13					PTTB 2,5 BU (bottom row)
									-11S5.1	BU	14			PT 2,5 BU		/11.1.3D	13,1414	-JB4A -X4	14					(top row)
									-11S5.2	BN	15			PT 2,5 BU		/11.1.3D	15,1615	-JB4A -X4	15					PTTB 2,5 BU (bottom row)
									-11S5.2	BU	16			PT 2,5 BU		/11.1.3D	15,1616	-JB4A -X4	16					(top row)
											17			PT 2,5 BU		/11.1.4D	17,1817	-JB4A -X4	17					PTTB 2,5 BU (bottom row)
											18			PT 2,5 BU		/11.1.4D	17,1818	-JB4A -X4	18					(top row)
PT 2,5 BU							1		-JB2A -X2	1	19			PT 2,5 BU		/11.1.4D	19,2019	-JB4A -X4		1				PTTB 2,5 BU (bottom row)
PT 2,5 BU							2		-JB2A -X2	2	20			PT 2,5 BU		/11.1.4D	19,2020	-JB4A -X4		2				(top row)
PT 2,5 BU							3		-JB2A -X2	3	21			PT 2,5 BU		/11.1.4D	21,2221	-JB4A -X4		3				PTTB 2,5 BU (bottom row)
PT 2,5 BU							4		-JB2A -X2	4	22			PT 2,5 BU		/11.1.5D	21,2222	-JB4A -X4		4				(top row)
PT 2,5 BU							5		-JB2A -X2	5	23			PT 2,5 BU		/11.1.5D	23,2423	-JB4A -X4		5				PTTB 2,5 BU (bottom row)
PT 2,5 BU							6		-JB2A -X2	6	24			PT 2,5 BU		/11.1.5D	23,2424	-JB4A -X4		6				(top row)
PT 2,5 BU							7		-JB2A -X2	7	25			PT 2,5 BU		/11.1.5D	25,2625	-JB4A -X4		7				PTTB 2,5 BU (bottom row)
PT 2,5 BU							8		-JB2A -X2	8	26			PT 2,5 BU		/11.1.5D	25,2626	-JB4A -X4		8				(top row)
PT 2,5 BU							9		-JB2A -X2	9	27			PT 2,5 BU		/11.1.6D	27,2827	-JB4A -X4		9				PTTB 2,5 BU (bottom row)
PT 2,5 BU							10		-JB2A -X2	10	28			PT 2,5 BU		/11.1.6D	27,2828	-JB4A -X4		10				(top row)
PT 2,5 BU							11		-JB2A -X2	11	29			PT 2,5 BU		/11.1.6D	29,3029	-JB4A -X4		11				PTTB 2,5 BU (bottom row)
PT 2,5 BU							12		-JB2A -X2	12	30			PT 2,5 BU		/11.1.6D	29,3030	-JB4A -X4		12				(top row)
PT 2,5 BU							13		-JB2A -X2	13	31			PT 2,5 BU		/11.1.6D	31,3231	-JB4A -X4		13				PTTB 2,5 BU (bottom row)
PT 2,5 BU							14		-JB2A -X2	14	32			PT 2,5 BU		/11.1.7D	31,3232	-JB4A -X4		14				(top row)
PT 2,5 BU							15		-JB2A -X2	15	33			PT 2,5 BU		/11.1.7D	33,3433	-JB4A -X4		15				PTTB 2,5 BU (bottom row)
PT 2,5 BU							16		-JB2A -X2	16	34			PT 2,5 BU		/11.1.7D	33,3434	-JB4A -X4		16				(top row)
PT 2,5 BU							17		-JB2A -X2	17	35			PT 2,5 BU		/11.1.7D	35,3635	-JB4A -X4		17				PTTB 2,5 BU (bottom row)
PT 2,5 BU							18		-JB2A -X2	18	36			PT 2,5 BU		/11.1.7D	35,3636	-JB4A -X4		18				(top row)
PT 2,5 BU							19		-JB2A -X2	19	37			PT 2,5 BU		/11.1.8D	37,3837	-JB4A -X4		19				PTTB 2,5 BU (bottom row)
PT 2,5 BU							20		-JB2A -X2	20	38			PT 2,5 BU		/11.1.8D	37,3838	-JB4A -X4		20				(top row)
PT 2,5 BU							21		-JB2A -X2	21	39			PT 2,5 BU		/11.1.8D	39,4039	-JB4A -X4		21				PTTB 2,5 BU (bottom row)
PT 2,5 BU							22		-JB2A -X2	22	40			PT 2,5 BU		/11.1.8D	39,4040	-JB4A -X4		22				(top row)
PT 2,5 BU							23		-JB2A -X2	23	41			PT 2,5 BU		/11.1.8D	41,4241	-JB4A -X4		23				PTTB 2,5 BU (bottom row)
PT 2,5 BU							24		-JB2A -X2	24	42			PT 2,5 BU		/11.1.9D	41,4242	-JB4A -X4		24				(top row)
PT 2,5 BU							25		-JB2A -X2	25	43			PT 2,5 BU		/11.1.9D	43,4443	-JB4A -X4		25				PTTB 2,5 BU (bottom row)
PT 4-FE								S	-JB3A -X3	S	S			PT 4-FE		/11.2.3C								
PT 4-FE							S		-JB2A -X2	S	S			PT 4-FE		/11.2.3C								
											S			PT 4-FE		/11.2.3C	S	-JB4A -X4	S					PT 4-FE
											S			PT 4-FE		/11.2.3C	S	-JB4A -X4		S				PT 4-FE

Index	Revision	Date	name
2	Final as built	19-3-2025	M.Besseling
1	For approval	13-11-2024	besselingmi

Drawn:	31-10-2024	elshofjo	
Engineer:	19-9-2024	besselingmi	
Approved:			
Changed:			

KANON LOADING EQUIPMENT B.V.

Ref: P242068, B242352 Quote:

Order: 2011280786 Item: 001000

KANON LOADING EQUIPMENT

www.kanon.nl

Electromach BV
Jan Tinbergenstraat 193
7559 SP Hengelo
The Netherlands

Terminal diagram

Int. Revision :

Drawing No.: 2011280786-001000-24

Refer to protection notice ISO 16016

P242068A91

+MLA-A-JB1A-X1

Scale: 1 mm : 1 mm / A3

Sheet: 361 page 1 / 1

Terminal diagram

+MLA-A-JB2A-X2

External cable								-W112 OZ-BL-CY 25 x 0,75 mm²	General remarks		Terminal block : -X2						Number of terminals : 26		-W121.1 ERC QCDC cable	-W112 OZ-BL-CY 25 x 0,75 mm²				Internal cable
									External destination		Terminal number	Wire jumper	Jumper	Terminal type	Terminal number	Cross-reference	Internal destination							
Comment									Device	Pin							Pin	Device						Comment
PT 2,5 BU								1	-JB1A -X1	19	1			PT 2,5 BU		/11.1.4B	1	-XQC-A	1					
PT 2,5 BU								2	-JB1A -X1	20	2			PT 2,5 BU		/11.1.4B	2	-XQC-A	2					
									-11S7.1	BN	3			PT 2,5 BU		/11.1.4B	21	-JB1A -X1		3				PT 2,5 BU
									-11S7.1	BU	4			PT 2,5 BU		/11.1.5B	22	-JB1A -X1		4				PT 2,5 BU
									-11S7.3	BN	5			PT 2,5 BU		/11.1.5B	23	-JB1A -X1		5				PT 2,5 BU
									-11S7.3	BU	6			PT 2,5 BU		/11.1.5B	24	-JB1A -X1		6				PT 2,5 BU
									-11S7.4	BN	7			PT 2,5 BU		/11.1.5B	25	-JB1A -X1		7				PT 2,5 BU
									-11S7.4	BU	8			PT 2,5 BU		/11.1.5B	26	-JB1A -X1		8				PT 2,5 BU
									-11S8.1	BN	9			PT 2,5 BU		/11.1.6B	27	-JB1A -X1		9				PT 2,5 BU
									-11S8.1	BU	10			PT 2,5 BU		/11.1.6B	28	-JB1A -X1		10				PT 2,5 BU
									-11S8.2	BN	11			PT 2,5 BU		/11.1.6B	29	-JB1A -X1		11				PT 2,5 BU
									-11S8.2	BU	12			PT 2,5 BU		/11.1.6B	30	-JB1A -X1		12				PT 2,5 BU
									-11S8.3	BN	13			PT 2,5 BU		/11.1.6B	31	-JB1A -X1		13				PT 2,5 BU
									-11S8.3	BU	14			PT 2,5 BU		/11.1.7B	32	-JB1A -X1		14				PT 2,5 BU
											15			PT 2,5 BU		/11.1.7B	33	-JB1A -X1		15				PT 2,5 BU
											16			PT 2,5 BU		/11.1.7B	34	-JB1A -X1		16				PT 2,5 BU
											17			PT 2,5 BU		/11.1.7B	35	-JB1A -X1		17				PT 2,5 BU
											18			PT 2,5 BU		/11.1.7B	36	-JB1A -X1		18				PT 2,5 BU
											19			PT 2,5 BU		/11.1.8B	37	-JB1A -X1		19				PT 2,5 BU
											20			PT 2,5 BU		/11.1.8B	38	-JB1A -X1		20				PT 2,5 BU
											21			PT 2,5 BU		/11.1.8B	39	-JB1A -X1		21				PT 2,5 BU
											22			PT 2,5 BU		/11.1.8B	40	-JB1A -X1		22				PT 2,5 BU
											23			PT 2,5 BU		/11.1.8B	41	-JB1A -X1		23				PT 2,5 BU
											24			PT 2,5 BU		/11.1.9B	42	-JB1A -X1		24				PT 2,5 BU
											25			PT 2,5 BU		/11.1.9B	43	-JB1A -X1		25				PT 2,5 BU
											S			PT 4-FE		/11.2.4B	S	-JB1A -X1		S				PT 4-FE

Index	Revision	Date	name
2	Final as built	19-3-2025	M.Besseling
1	For approval	13-11-2024	besselingmi

Drawn:	31-10-2024	elshofjo	
Engineer:	19-9-2024	besselingmi	
Approved:			
Changed:			

KANON LOADING EQUIPMENT B.V.

Ref: P242068, B242352 Quote:

Order: 2011280786 Item: 001000

KANON LOADING EQUIPMENT

www.kanon.nl

Electromach BV
Jan Tinbergenstraat 193
7559 SP Hengelo
The Netherlands
US

Terminal diagram

Int. Revision :

Drawing No.:
2011280786-001000-24

Refer to protection notice ISO 16016

P242068A91

+MLA-A-JB2A-X2

Scale: 1 mm : 1 mm / A3

Sheet: 362 page 1 / 1

Terminal diagram

+MLA-A-JB3A-X3

External cable

Comment

General remarks

Terminal block : -X3

Number of terminals : 9

External destination		Terminal number	Wire jumper	Jumper	Terminal type	Terminal number	Cross-reference	Internal destination		-W111 OZ-BL-CY 8 x 0,75 mm²	Internal cable
Device	Pin							Pin	Device		Comment
-11S1.1	BN	1			PT 2,5 BU		/11.1.0B	1	-JB1A -X1	1	PT 2,5 BU
-11S1.1	BU	2			PT 2,5 BU		/11.1.1B	2	-JB1A -X1	2	PT 2,5 BU
-11S1.2	BN	3			PT 2,5 BU		/11.1.1B	3	-JB1A -X1	3	PT 2,5 BU
-11S1.2	BU	4			PT 2,5 BU		/11.1.1B	4	-JB1A -X1	4	PT 2,5 BU
-11S2	BN	5			PT 2,5 BU		/11.1.1B	5	-JB1A -X1	5	PT 2,5 BU
-11S2	BU	6			PT 2,5 BU		/11.1.1B	6	-JB1A -X1	6	PT 2,5 BU
		7			PT 2,5 BU		/11.1.2B	7	-JB1A -X1	7	PT 2,5 BU
		8			PT 2,5 BU		/11.1.2B	8	-JB1A -X1	8	PT 2,5 BU
		S			PT 4-FE		/11.2.3B	S	-JB1A -X1	S	PT 4-FE

Index	Revision	Date	name
2	Final as built	19-3-2025	M.Besseling
1	For approval	13-11-2024	besselingmi

Drawn: 31-10-2024 elshofjo
Engineer: 19-9-2024 besselingmi
Approved:
Changed:

KANON LOADING EQUIPMENT B.V.

Ref: P242068, B242352 Quote:
Order: 2011280786 Item: 001000

KANON LOADING EQUIPMENT
www.kanon.nl

Electromach BV
Jan Tinbergenstraat 193
7559 SP Hengelo
The Netherlands
US

Terminal diagram

Int. Revision :
Drawing No.: 2011280786-001000-24
Refer to protection notice ISO 16016

P242068A91
+MLA-A-JB3A-X3
Scale: 1 mm : 1 mm / A3
Sheet: 363 page 1 / 1

Terminal diagram

+MLA-A-JB4A-X4

External cable						+JETTY -W102-3 OZ-BL-CY 12 x 0,75 mm²	+JETTY -W102-2 OZ-BL-CY 25 x 0,75 mm²	+JETTY -W102-1 OZ-BL-CY 18 x 0,75 mm²	General remarks		Terminal block : -X4						Number of terminals : 61		-W141 OZ-BL-CY 18 x 0,75 mm²	-W142 OZ-BL-CY 25 x 0,75 mm²	-W143 OZ-BL-CY 2 x 0,75 mm²			Internal cable
									External destination		Terminal number	Wire jumper	Jumper	Terminal type	Terminal number	Cross-reference	Internal destination						
Comment									Device	Pin							Pin	Device					Comment
PT 2,5 BU								1	-ETB2 -XiLA1	1	**1**			PTTB 2,5 BU (bottom row)		/11.1.0E	1	-JB1A -X1	1				PT 2,5 BU
PT 2,5 BU								2	-ETB2 -XiLA1	2	**2**			(top row)		/11.1.1E	2	-JB1A -X1	2				PT 2,5 BU
PT 2,5 BU								3	-ETB2 -XiLA1	3	**3**			PTTB 2,5 BU (bottom row)		/11.1.1E	3	-JB1A -X1	3				PT 2,5 BU
PT 2,5 BU								4	-ETB2 -XiLA1	4	**4**			(top row)		/11.1.1E	4	-JB1A -X1	4				PT 2,5 BU
PT 2,5 BU								5	-ETB2 -XiLA1	5	**5**			PTTB 2,5 BU (bottom row)		/11.1.1E	5	-JB1A -X1	5				PT 2,5 BU
PT 2,5 BU								6	-ETB2 -XiLA1	6	**6**			(top row)		/11.1.1E	6	-JB1A -X1	6				PT 2,5 BU
PT 2,5 BU								7	-ETB2 -XiLA1	7	**7**			PTTB 2,5 BU (bottom row)		/11.1.2E	7	-JB1A -X1	7				PT 2,5 BU
PT 2,5 BU								8	-ETB2 -XiLA1	8	**8**			(top row)		/11.1.2E	8	-JB1A -X1	8				PT 2,5 BU
PT 2,5 BU								9	-ETB2 -XiLA1	9	**9**			PTTB 2,5 BU (bottom row)		/11.1.2E	9	-JB1A -X1	9				PT 2,5 BU
PT 2,5 BU								10	-ETB2 -XiLA1	10	**10**			(top row)		/11.1.2E	10	-JB1A -X1	10				PT 2,5 BU
PT 2,5 BU								11	-ETB2 -XiLA1	11	**11**			PTTB 2,5 BU (bottom row)		/11.1.2E	11	-JB1A -X1	11				PT 2,5 BU
PT 2,5 BU								12	-ETB2 -XiLA1	12	**12**			(top row)		/11.1.3E	12	-JB1A -X1	12				PT 2,5 BU
PT 2,5 BU								13	-ETB2 -XiLA1	13	**13**			PTTB 2,5 BU (bottom row)		/11.1.3E	13	-JB1A -X1	13				PT 2,5 BU
PT 2,5 BU								14	-ETB2 -XiLA1	14	**14**			(top row)		/11.1.3E	14	-JB1A -X1	14				PT 2,5 BU
PT 2,5 BU								15	-ETB2 -XiLA1	15	**15**			PTTB 2,5 BU (bottom row)		/11.1.3E	15	-JB1A -X1	15				PT 2,5 BU
PT 2,5 BU								16	-ETB2 -XiLA1	16	**16**			(top row)		/11.1.3E	16	-JB1A -X1	16				PT 2,5 BU
PT 2,5 BU								17	-ETB2 -XiLA1	17	**17**			PTTB 2,5 BU (bottom row)		/11.1.4E	17	-JB1A -X1	17				PT 2,5 BU
PT 2,5 BU								18	-ETB2 -XiLA1	18	**18**			(top row)		/11.1.4E	18	-JB1A -X1	18				PT 2,5 BU
PT 2,5 BU							1		-ETB2 -XiLA1	19	**19**			PTTB 2,5 BU (bottom row)		/11.1.4E	19	-JB1A -X1		1			PT 2,5 BU
PT 2,5 BU							2		-ETB2 -XiLA1	20	**20**			(top row)		/11.1.4E	20	-JB1A -X1		2			PT 2,5 BU
PT 2,5 BU							3		-ETB2 -XiLA1	21	**21**			PTTB 2,5 BU (bottom row)		/11.1.4E	21	-JB1A -X1		3			PT 2,5 BU
PT 2,5 BU							4		-ETB2 -XiLA1	22	**22**			(top row)		/11.1.5E	22	-JB1A -X1		4			PT 2,5 BU
PT 2,5 BU							5		-ETB2 -XiLA1	23	**23**			PTTB 2,5 BU (bottom row)		/11.1.5E	23	-JB1A -X1		5			PT 2,5 BU
PT 2,5 BU							6		-ETB2 -XiLA1	24	**24**			(top row)		/11.1.5E	24	-JB1A -X1		6			PT 2,5 BU
PT 2,5 BU							7		-ETB2 -XiLA1	25	**25**			PTTB 2,5 BU (bottom row)		/11.1.5E	25	-JB1A -X1		7			PT 2,5 BU
PT 2,5 BU							8		-ETB2 -XiLA1	26	**26**			(top row)		/11.1.5E	26	-JB1A -X1		8			PT 2,5 BU
PT 2,5 BU							9		-ETB2 -XiLA1	27	**27**			PTTB 2,5 BU (bottom row)		/11.1.6E	27	-JB1A -X1		9			PT 2,5 BU
PT 2,5 BU							10		-ETB2 -XiLA1	28	**28**			(top row)		/11.1.6E	28	-JB1A -X1		10			PT 2,5 BU
PT 2,5 BU							11		-ETB2 -XiLA1	29	**29**			PTTB 2,5 BU (bottom row)		/11.1.6E	29	-JB1A -X1		11			PT 2,5 BU
PT 2,5 BU							12		-ETB2 -XiLA1	30	**30**			(top row)		/11.1.6E	30	-JB1A -X1		12			PT 2,5 BU
PT 2,5 BU							13		-ETB2 -XiLA1	31	**31**			PTTB 2,5 BU (bottom row)		/11.1.6E	31	-JB1A -X1		13			PT 2,5 BU
PT 2,5 BU							14		-ETB2 -XiLA1	32	**32**			(top row)		/11.1.7E	32	-JB1A -X1		14			PT 2,5 BU
PT 2,5 BU							15		-ETB2 -XiLA1	33	**33**			PTTB 2,5 BU (bottom row)		/11.1.7E	33	-JB1A -X1		15			PT 2,5 BU
PT 2,5 BU							16		-ETB2 -XiLA1	34	**34**			(top row)		/11.1.7E	34	-JB1A -X1		16			PT 2,5 BU
PT 2,5 BU							17		-ETB2 -XiLA1	35	**35**			PTTB 2,5 BU (bottom row)		/11.1.7E	35	-JB1A -X1		17			PT 2,5 BU
PT 2,5 BU							18		-ETB2 -XiLA1	36	**36**			(top row)		/11.1.7E	36	-JB1A -X1		18			PT 2,5 BU
PT 2,5 BU							19		-ETB2 -XiLA1	37	**37**			PTTB 2,5 BU (bottom row)		/11.1.8E	37	-JB1A -X1		19			PT 2,5 BU
PT 2,5 BU							20		-ETB2 -XiLA1	38	**38**			(top row)		/11.1.8E	38	-JB1A -X1		20			PT 2,5 BU
PT 2,5 BU							21		-ETB2 -XiLA1	39	**39**			PTTB 2,5 BU (bottom row)		/11.1.8E	39	-JB1A -X1		21			PT 2,5 BU
PT 2,5 BU							22		-ETB2 -XiLA1	40	**40**			(top row)		/11.1.8E	40	-JB1A -X1		22			PT 2,5 BU
PT 2,5 BU							23		-ETB2 -XiLA1	41	**41**			PTTB 2,5 BU (bottom row)		/11.1.8E	41	-JB1A -X1		23			PT 2,5 BU
PT 2,5 BU							24		-ETB2 -XiLA1	42	**42**			(top row)		/11.1.9E	42	-JB1A -X1		24			PT 2,5 BU
PT 2,5 BU							25		-ETB2 -XiLA1	43	**43**			PTTB 2,5 BU (bottom row)		/11.1.9E	43	-JB1A -X1		25			PT 2,5 BU
											44			(top row)		/11.1.9E							
PT 2,5 BU						1			-ETB2 -XiLA1	45	**45**			PTTB 2,5 BU (bottom row)		/11.2.0E	BN	-11S4.2					
PT 2,5 BU						2			-ETB2 -XiLA1	46	**46**			(top row)		/11.2.0E	BU	-11S4.2					
PT 2,5 BU						3			-ETB2 -XiLA1	47	**47**			PTTB 2,5 BU (bottom row)		/11.2.1E	BN	-11S4.4					
PT 2,5 BU						4			-ETB2 -XiLA1	48	**48**			(top row)		/11.2.1E	BU	-11S4.4					
PT 2,5 BU						5			-ETB2 -XiLA1	49	**49**			PTTB 2,5 BU (bottom row)		/11.2.1E		-11PT5			1		

Index	Revision	Date	name
2	*Final as built*	*19-3-2025*	*M.Besseling*
1	*For approval*	*13-11-2024*	*besselingmi*

Drawn:	*31-10-2024*	*elshofjo*	
Engineer:	*19-9-2024*	*besselingmi*	
Approved:			
Changed:			

KANON LOADING EQUIPMENT B.V.

Ref: *P242068, B242352* Quote:

Order: *2011280786* Item: *001000*

KANON LOADING EQUIPMENT

www.kanon.nl

Electromach BV
Jan Tinbergenstraat 193
7559 SP Hengelo
The Netherlands
US

Terminal diagram

Int. Revision : *P242068A91*

Drawing No.: *+MLA-A-JB4A-X4*

2011280786-001000-24

Scale: *1 mm : 1 mm / A3*

Refer to protection notice ISO 16016

Sheet: *364* page *1 / 2*

Terminal diagram

+MLA-A-JB4A-X4

External cable				-W142 OZ-BL-CY 25 x 0,75 mm²	-W141 OZ-BL-CY 18 x 0,75 mm²	+JETTY-W102-2 OZ-BL-CY 25 x 0,75 mm²	-W143 OZ-BL-CY 2 x 0,75 mm²	+JETTY-W102-3 OZ-BL-CY 12 x 0,75 mm²	General remarks		Terminal block : -X4						Number of terminals : 61		-W143 OZ-BL-CY 2 x 0,75 mm²	+JETTY-W102-1 OZ-BL-CY 18 x 0,75 mm²	+JETTY-W102-3 OZ-BL-CY 12 x 0,75 mm²			Internal cable
									External destination		Terminal number	Wire jumper	Jumper	Terminal type	Terminal number	Cross-reference	Internal destination						
Comment									Device	Pin							Pin	Device						Comment
PT 2,5 BU								6	-ETB2 -XiLA1	50	**50**			(top row)		/11.2.1E		-11PT5	2					
PT 2,5 BU								7	-ETB2 -XiLA1	51	**51**			PTTB 2,5 BU (bottom row)		/11.2.1E								
PT 2,5 BU								8	-ETB2 -XiLA1	52	**52**			(top row)		/11.2.1E								
PT 2,5 BU								9	-ETB2 -XiLA1	53	**53**			PTTB 2,5 BU (bottom row)		/11.2.2E								
PT 2,5 BU								10	-ETB2 -XiLA1	54	**54**			(top row)		/11.2.2E								
PT 2,5 BU								11	-ETB2 -XiLA1	55	**55**			PTTB 2,5 BU (bottom row)		/11.2.2E								
PT 2,5 BU								12	-ETB2 -XiLA1	56	**56**			(top row)		/11.2.2E								
							S		-11PT5		**S**	●		PT 4-FE		/11.2.3E	TE	-ETB2		S				
						S			-ETB2	TE	**S**	●		PT 4-FE		/11.2.3E								
											S	●		PT 4-FE		/11.2.3E	TE	-ETB2			S			
PT 4-FE					S				-JB1A -X1	S	**S**	●		PT 4-FE		/11.2.3E								
PT 4-FE				S					-JB1A -X1	S	**S**	●		PT 4-FE		/11.2.3E								

Index	Revision	Date	name				
2	Final as built	19-3-2025	M.Besseling	Drawn:	31-10-2024	elshofjo	**KANON LOADING EQUIPMENT B.V.**
1	For approval	13-11-2024	besselingmi	Engineer:	19-9-2024	besselingmi	
				Approved:			Ref: P242068, B242352 Quote:
				Changed:			Order: 2011280786 Item: 001000

KANON LOADING EQUIPMENT
www.kanon.nl

Electromach BV
Jan Tinbergenstraat 193
7559 SP Hengelo
The Netherlands

Terminal diagram

Int. Revision :
Drawing No.: 2011280786-001000-24
Refer to protection notice ISO 16016

P242068A91
+MLA-A-JB4A-X4
Scale: 1 mm : 1 mm / A3
Sheet: 364 page 2 / 2

Terminal diagram

+MLA-A-JB5A-X5

External cable									General remarks		Terminal block : -X5						Number of terminals : 35		+JETTY -W101 KVCY Dca 25 x 1,5 mm²					Internal cable
									External destination		Terminal number	Wire jumper	Jumper	Terminal type	Terminal number	Cross-reference	Internal destination							
Comment									Device	Pin							Pin	Device						Comment
									-Y1	1	**1**			PT 2,5		/11.3.0B	1	-ETB1 -XLA1	1					PT 2,5
									-Y2	1	**2**			PT 2,5		/11.3.0B	2	-ETB1 -XLA1	2					PT 2,5
									-Y3	1	**3**			PT 2,5		/11.3.0B	3	-ETB1 -XLA1	3					PT 2,5
									-Y4	1	**4**			PT 2,5		/11.3.1B	4	-ETB1 -XLA1	4					PT 2,5
									-Y5	1	**5**			PT 2,5		/11.3.1B	5	-ETB1 -XLA1	5					PT 2,5
									-Y6	1	**6**			PT 2,5		/11.3.1B	6	-ETB1 -XLA1	6					PT 2,5
									-Y11	1	**7**			PT 2,5		/11.3.1B	7	-ETB1 -XLA1	7					PT 2,5
									-Y12	1	**8**			PT 2,5		/11.3.1B	8	-ETB1 -XLA1	8					PT 2,5
									-Y7.1	1	**9**			PT 2,5		/11.3.1B	9	-ETB1 -XLA1	9					PT 2,5
									-Y7.2	1	**10**			PT 2,5		/11.3.1B	10	-ETB1 -XLA1	10					PT 2,5
									-Y8.1	1	**11**			PT 2,5		/11.3.1B	11	-ETB1 -XLA1	11					PT 2,5
									-Y8.2	1	**12**			PT 2,5		/11.3.1B	12	-ETB1 -XLA1	12					PT 2,5
									-Y9.1	1	**13**			PT 2,5		/11.3.1B	13	-ETB1 -XLA1	13					PT 2,5
									-Y9.2	1	**14**			PT 2,5		/11.3.2B	14	-ETB1 -XLA1	14					PT 2,5
									-Y9.3	1	**15**			PT 2,5		/11.3.2B	15	-ETB1 -XLA1	15					PT 2,5
									-Y13	1	**16**			PT 2,5		/11.3.2B	16	-ETB1 -XLA1	16					PT 2,5
									-Y14	1	**17**			PT 2,5		/11.3.2B	17	-ETB1 -XLA1	17					PT 2,5
									-Y1	3	**18**			PT 2,5		/11.3.7B	18	-ETB1 -XLA1	18					PT 2,5
									-Y2	3	**19**			PT 2,5		/11.3.7B	19	-ETB1 -XLA1	19					PT 2,5
									-Y3	3	**20**			PT 2,5		/11.3.7B	20	-ETB1 -XLA1	20					PT 2,5
									-Y4	3	**21**			PT 2,5		/11.3.8B	21	-ETB1 -XLA1	21					PT 2,5
									-Y5	3	**22**			PT 2,5		/11.3.8B	22	-ETB1 -XLA1	22					PT 2,5
									-Y6	3	**23**			PT 2,5		/11.3.8B								
									-Y11	3	**24**			PT 2,5		/11.3.8B								
									-Y12	3	**25**			PT 2,5		/11.3.8B								
									-Y7.1	3	**26**			PT 2,5		/11.3.8B								
									-Y7.2	3	**27**			PT 2,5		/11.3.8B								
									-Y9.1	3	**28**			PT 2,5		/11.3.8B								
									-Y9.2	3	**29**			PT 2,5		/11.3.8B								
									-Y9.3	3	**30**			PT 2,5		/11.3.8B								
									-Y13	3	**31**			PT 2,5		/11.3.9B								
									-Y14	3	**32**			PT 2,5		/11.3.9B								
									-Y8.1	3	**33**			PT 2,5		/11.3.9B	23	-ETB1 -XLA1	23					PT 2,5
									-Y8.2	3	**34**			PT 2,5		/11.3.9B	24	-ETB1 -XLA1	24					PT 2,5
											PE			PT 2,5 PE		/11.3.9B								

Index	Revision	Date	name
2	Final as built	19-3-2025	M.Besseling
1	For approval	13-11-2024	besselingmi

Drawn:	31-10-2024	elshofjo	
Engineer:	19-9-2024	besselingmi	
Approved:			
Changed:			

KANON LOADING EQUIPMENT B.V.

Ref: P242068, B242352 Quote:

Order: 2011280786 Item: 001000

KANON LOADING EQUIPMENT

www.kanon.nl

Electromach BV
Jan Tinbergenstraat 193
7559 SP Hengelo
The Netherlands

Terminal diagram

Int. Revision :

Drawing No.:
2011280786-001000-24

Refer to protection notice ISO 16016

P242068A91

+MLA-A-JB5A-X5

Scale: 1 mm : 1 mm / A3

Sheet: 365 page 1 / 1

Terminal diagram

+MLA-A-JB6A-X6

External cable		+JETTY -W103 OZ-BL-CY 18 x 0,75 mm²	+Valve block -W14FB	+Valve block -W13FB	+Valve block -W8.2FB	+Valve block -W8.1FB	+Valve block -W7.2FB	+Valve block -W7.1FB	General remarks		Terminal block : -X6						Number of terminals : 37		+JETTY -W103 OZ-BL-CY 18 x 0,75 mm²					Internal cable
									External destination								Internal destination							
Comment									Device	Pin	Terminal number	Wire jumper	Jumper	Terminal type	Terminal number	Cross-reference	Pin	Device						Comment
								1	-Y7.1	BN	**1**			PTTB 2,5 BU (bottom row)		/11.2.4E	1	-ETB2 -XiYLA1	1					PT 2,5 BU
								2	-Y7.1	WH	**2**			(top row)		/11.2.4E	2	-ETB2 -XiYLA1	2					PT 2,5 BU
								3	-Y7.1		**1'**			PTTB 2,5 BU (bottom row)		/11.2.4E								
								4	-Y7.1		**2'**			(top row)		/11.2.4E								
							1		-Y7.2	BN	**3**			PTTB 2,5 BU (bottom row)		/11.2.5E	3	-ETB2 -XiYLA1	3					PT 2,5 BU
							2		-Y7.2	WH	**4**			(top row)		/11.2.5E	4	-ETB2 -XiYLA1	4					PT 2,5 BU
							3		-Y7.2		**3'**			PTTB 2,5 BU (bottom row)		/11.2.5E								
							4		-Y7.2		**4'**			(top row)		/11.2.5E								
						1			-Y8.1	BN	**5**			PTTB 2,5 BU (bottom row)		/11.2.5E	5	-ETB2 -XiYLA1	5					PT 2,5 BU
						2			-Y8.1	WH	**6**			(top row)		/11.2.5E	6	-ETB2 -XiYLA1	6					PT 2,5 BU
						3			-Y8.1		**5'**			PTTB 2,5 BU (bottom row)		/11.2.5E								
						4			-Y8.1		**6'**			(top row)		/11.2.6E								
					1				-Y8.2	BN	**7**			PTTB 2,5 BU (bottom row)		/11.2.6E	7	-ETB2 -XiYLA1	7					PT 2,5 BU
					2				-Y8.2	WH	**8**			(top row)		/11.2.6E	8	-ETB2 -XiYLA1	8					PT 2,5 BU
					3				-Y8.2		**7'**			PTTB 2,5 BU (bottom row)		/11.2.6E								
					4				-Y8.2		**8'**			(top row)		/11.2.6E								
				1					-Y13	BN	**9**			PTTB 2,5 BU (bottom row)		/11.2.6E	9	-ETB2 -XiYLA1	9					PT 2,5 BU
				2					-Y13	WH	**10**			(top row)		/11.2.7E	10	-ETB2 -XiYLA1	10					PT 2,5 BU
				3					-Y13		**9'**			PTTB 2,5 BU (bottom row)		/11.2.7E								
				4					-Y13		**10'**			(top row)		/11.2.7E								
			1						-Y14	BN	**11**			PTTB 2,5 BU (bottom row)		/11.2.7E	11	-ETB2 -XiYLA1	11					PT 2,5 BU
			2						-Y14	WH	**12**			(top row)		/11.2.7E	12	-ETB2 -XiYLA1	12					PT 2,5 BU
			3						-Y14		**11'**			PTTB 2,5 BU (bottom row)		/11.2.7E								
			4						-Y14		**12'**			(top row)		/11.2.7E								
PT 2,5 BU		13							-ETB2 -XiYLA1	13	**13**			PTTB 2,5 BU (bottom row)		/11.2.8E								
PT 2,5 BU		14							-ETB2 -XiYLA1	14	**14**			(top row)		/11.2.8E								
											13'			PTTB 2,5 BU (bottom row)		/11.2.8E								
											14'			(top row)		/11.2.8E								
PT 2,5 BU		15							-ETB2 -XiYLA1	15	**15**			PTTB 2,5 BU (bottom row)		/11.2.8E								
PT 2,5 BU		16							-ETB2 -XiYLA1	16	**16**			(top row)		/11.2.8E								
											15'			PTTB 2,5 BU (bottom row)		/11.2.8E								
											16'			(top row)		/11.2.9E								
PT 2,5 BU		17							-ETB2 -XiYLA1	17	**17**			PTTB 2,5 BU (bottom row)		/11.2.9E								
PT 2,5 BU		18							-ETB2 -XiYLA1	18	**18**			(top row)		/11.2.9E								
											17'			PTTB 2,5 BU (bottom row)		/11.2.9E								
											18'			(top row)		/11.2.9E								
											S			PT 4-FE		/11.2.9E	TE	-ETB2	S					

Index	Revision	Date	name							
2	Final as built	19-3-2025	M.Besseling	Drawn:	31-10-2024	elshofjo	**KANON LOADING EQUIPMENT B.V.**			
1	For approval	13-11-2024	besselingmi	Engineer:	19-9-2024	besselingmi				
				Approved:			Ref: P242068, B242352	Quote:		
				Changed:			Order: 2011280786	Item: 001000		

KANON LOADING EQUIPMENT
www.kanon.nl

Electromach BV
Jan Tinbergenstraat 193
7559 SP Hengelo
The Netherlands

Terminal diagram

Int. Revision :
Drawing No.: 2011280786-001000-24
Refer to protection notice ISO 16016

P242068A91
+MLA-A-JB6A-X6
Scale: 1 mm : 1 mm / A3
Sheet: 366 | page 1 / 1

Terminal diagram

+MLA-A-JB8A-X8

External cable									General remarks		Terminal block : -X8						Number of terminals : 2		-W121.2 ERC QCDC cable					Internal cable
									External destination		Terminal number	Wire jumper	Jumper	Terminal type	Terminal number	Cross-reference	Internal destination							
Comment									Device	Pin							Pin	Device						Comment
									-11S7.2	BN	1			PT 2,5 BU		/11.1.4A	1	-XQC-A	1					
									-11S7.2	BU	2			PT 2,5 BU		/11.1.4A	2	-XQC-A	2					

Index	Revision	Date	name
2	Final as built	19-3-2025	M.Besseling
1	For approval	13-11-2024	besselingmi

Drawn:	31-10-2024	elshofjo	
Engineer:	19-9-2024	besselingmi	
Approved:			
Changed:			

KANON LOADING EQUIPMENT B.V.

Ref:	P242068, B242352	Quote:	
Order:	2011280786	Item:	001000

KANON LOADING EQUIPMENT

www.kanon.nl

Electromach BV
Jan Tinbergenstraat 193
7559 SP Hengelo
The Netherlands
US

Terminal diagram

Int. Revision :	P242068A91
Drawing No.: 2011280786-001000-24	+MLA-A-JB8A-X8
	Scale: 1 mm : 1 mm / A3
Refer to protection notice ISO 16016	Sheet: 367 page 1 / 1

Terminal diagram

+MLA-A-JB11A-X11

General remarks

Terminal block : -X11

Number of terminals : 12

External cable								-W181 KVCY Dca 12 x 1,5 mm²	External destination		Terminal number	Wire jumper	Jumper	Terminal type	Terminal number	Cross-reference	Internal destination		+JETTY -W104 KVCY Dca 12 x 1,5 mm²					Internal cable
Comment									Device	Pin							Pin	Device						Comment
PT 2,5								1	-JB12A -X12	1	**1**			PT 2,5		/11.4.0B	1	-ETB1 -XYLA1	1					PT 2,5
PT 2,5								2	-JB12A -X12	2	**2**			PT 2,5		/11.4.0B	2	-ETB1 -XYLA1	2					PT 2,5
PT 2,5								3	-JB12A -X12	3	**3**			PT 2,5		/11.4.0B	3	-ETB1 -XYLA1	3					PT 2,5
PT 2,5								4	-JB12A -X12	4	**4**			PT 2,5		/11.4.1B	4	-ETB1 -XYLA1	4					PT 2,5
PT 2,5								5	-JB12A -X12	5	**5**			PT 2,5		/11.4.1B	5	-ETB1 -XYLA1	5					PT 2,5
PT 2,5								6	-JB12A -X12	6	**6**			PT 2,5		/11.4.1B	6	-ETB1 -XYLA1	6					PT 2,5
PT 2,5								7	-JB12A -X12	7	**7**			PT 2,5		/11.4.7B	7	-ETB1 -XYLA1	7					PT 2,5
PT 2,5								8	-JB12A -X12	8	**8**			PT 2,5		/11.4.7B	8	-ETB1 -XYLA1	8					PT 2,5
PT 2,5								9	-JB12A -X12	9	**9**			PT 2,5		/11.4.7B	9	-ETB1 -XYLA1	9					PT 2,5
PT 2,5								10	-JB12A -X12	10	**10**			PT 2,5		/11.4.8B	10	-ETB1 -XYLA1	10					PT 2,5
PT 2,5								11	-JB12A -X12	11	**11**			PT 2,5		/11.4.8B	11	-ETB1 -XYLA1	11					PT 2,5
											PE			PT 2,5 PE		/11.4.8B								

Index	Revision	Date	name
2	Final as built	19-3-2025	M.Besseling
1	For approval	13-11-2024	besselingmi

Drawn: 31-10-2024 elshofjo
Engineer: 19-9-2024 besselingmi
Approved:
Changed:

KANON LOADING EQUIPMENT B.V.

Ref: P242068, B242352 Quote:
Order: 2011280786 Item: 001000

KANON LOADING EQUIPMENT
www.kanon.nl

Electromach BV
Jan Tinbergenstraat 193
7559 SP Hengelo
The Netherlands

Terminal diagram

Int. Revision :
Drawing No.: 2011280786-001000-24
Refer to protection notice ISO 16016

P242068A91
+MLA-A-JB11A-X11
Scale: 1 mm : 1 mm / A3
Sheet: 368 page 1 / 1

Terminal diagram

+MLA-A-JB12A-X12

External cable Comment	General remarks / External destination Device	Pin	Terminal block : -X12 Terminal number	Wire jumper	Jumper	Terminal type	Terminal number	Cross-reference	Number of terminals : 12 Internal destination Pin	Device	-W181 KVCY Dca 12 x 1,5 mm²	Internal cable Comment
			1			PT 2,5		/11.4.0C	1	-JB11A -X11	1	PT 2,5
			2			PT 2,5		/11.4.0C	2	-JB11A -X11	2	PT 2,5
			3			PT 2,5		/11.4.0C	3	-JB11A -X11	3	PT 2,5
			4			PT 2,5		/11.4.1C	4	-JB11A -X11	4	PT 2,5
			5			PT 2,5		/11.4.1C	5	-JB11A -X11	5	PT 2,5
			6			PT 2,5		/11.4.1C	6	-JB11A -X11	6	PT 2,5
			7			PT 2,5		/11.4.7C	7	-JB11A -X11	7	PT 2,5
			8			PT 2,5		/11.4.7C	8	-JB11A -X11	8	PT 2,5
			9			PT 2,5		/11.4.7C	9	-JB11A -X11	9	PT 2,5
			10			PT 2,5		/11.4.8C	10	-JB11A -X11	10	PT 2,5
			11			PT 2,5		/11.4.8C	11	-JB11A -X11	11	PT 2,5
			PE			PT 2,5 PE		/11.4.8C				

Index	Revision	Date	name
2	Final as built	19-3-2025	M.Besseling
1	For approval	13-11-2024	besselingmi

Drawn:	31-10-2024	elshofjo	
Engineer:	19-9-2024	besselingmi	
Approved:			
Changed:			

KANON LOADING EQUIPMENT B.V.

Ref: P242068, B242352 Quote:

Order: 2011280786 Item: 001000

KANON LOADING EQUIPMENT

www.kanon.nl

Electromach BV
Jan Tinbergenstraat 193
7559 SP Hengelo
The Netherlands

Terminal diagram

Int. Revision :

Drawing No.: 2011280786-001000-24

Refer to protection notice ISO 16016

P242068A91

+MLA-A-JB12A-X12

Scale: 1 mm : 1 mm / A3

Sheet: 369 page 1 / 1

Terminal diagram

+MLA-B-JB1B-X1

External cable							-W212 OZ-BL-CY 25 x 0,75 mm²	-W211 OZ-BL-CY 8 x 0,75 mm²	General remarks		Terminal block : -X1						Number of terminals : 47		-W241 OZ-BL-CY 18 x 0,75 mm²	-W242 OZ-BL-CY 25 x 0,75 mm²				Internal cable
									External destination		Terminal number	Wire jumper	Jumper	Terminal type	Terminal number	Cross-reference	Internal destination							
Comment									Device	Pin							Pin	Device						Comment
PT 2,5 BU								1	-JB3B -X3	1	**1**			PT 2,5 BU		/12.1.0D	1	-JB4B -X4	1					PTTB 2,5 BU (bottom row)
PT 2,5 BU								2	-JB3B -X3	2	**2**			PT 2,5 BU		/12.1.1D	2	-JB4B -X4	2					(top row)
PT 2,5 BU								3	-JB3B -X3	3	**3**			PT 2,5 BU		/12.1.1D	3	-JB4B -X4	3					PTTB 2,5 BU (bottom row)
PT 2,5 BU								4	-JB3B -X3	4	**4**			PT 2,5 BU		/12.1.1D	4	-JB4B -X4	4					(top row)
PT 2,5 BU								5	-JB3B -X3	5	**5**			PT 2,5 BU		/12.1.1D	5	-JB4B -X4	5					PTTB 2,5 BU (bottom row)
PT 2,5 BU								6	-JB3B -X3	6	**6**			PT 2,5 BU		/12.1.1D	6	-JB4B -X4	6					(top row)
PT 2,5 BU								7	-JB3B -X3	7	**7**			PT 2,5 BU		/12.1.2D	7	-JB4B -X4	7					PTTB 2,5 BU (bottom row)
PT 2,5 BU								8	-JB3B -X3	8	**8**			PT 2,5 BU		/12.1.2D	8	-JB4B -X4	8					(top row)
									-12S4.1	BN	**9**			PT 2,5 BU		/12.1.2D	9	-JB4B -X4	9					PTTB 2,5 BU (bottom row)
									-12S4.1	BU	**10**			PT 2,5 BU		/12.1.2D	10	-JB4B -X4	10					(top row)
									-12S4.3	BN	**11**			PT 2,5 BU		/12.1.2D	11	-JB4B -X4	11					PTTB 2,5 BU (bottom row)
									-12S4.3	BU	**12**			PT 2,5 BU		/12.1.3D	12	-JB4B -X4	12					(top row)
									-12S5.1	BN	**13**			PT 2,5 BU		/12.1.3D	13	-JB4B -X4	13					PTTB 2,5 BU (bottom row)
									-12S5.1	BU	**14**			PT 2,5 BU		/12.1.3D	14	-JB4B -X4	14					(top row)
									-12S5.2	BN	**15**			PT 2,5 BU		/12.1.3D	15	-JB4B -X4	15					PTTB 2,5 BU (bottom row)
									-12S5.2	BU	**16**			PT 2,5 BU		/12.1.3D	16	-JB4B -X4	16					(top row)
											17			PT 2,5 BU		/12.1.4D	17	-JB4B -X4	17					PTTB 2,5 BU (bottom row)
											18			PT 2,5 BU		/12.1.4D	18	-JB4B -X4	18					(top row)
PT 2,5 BU							1		-JB2B -X2	1	**19**			PT 2,5 BU		/12.1.4D	19	-JB4B -X4		1				PTTB 2,5 BU (bottom row)
PT 2,5 BU							2		-JB2B -X2	2	**20**			PT 2,5 BU		/12.1.4D	20	-JB4B -X4		2				(top row)
PT 2,5 BU							3		-JB2B -X2	3	**21**			PT 2,5 BU		/12.1.4D	21	-JB4B -X4		3				PTTB 2,5 BU (bottom row)
PT 2,5 BU							4		-JB2B -X2	4	**22**			PT 2,5 BU		/12.1.5D	22	-JB4B -X4		4				(top row)
PT 2,5 BU							5		-JB2B -X2	5	**23**			PT 2,5 BU		/12.1.5D	23	-JB4B -X4		5				PTTB 2,5 BU (bottom row)
PT 2,5 BU							6		-JB2B -X2	6	**24**			PT 2,5 BU		/12.1.5D	24	-JB4B -X4		6				(top row)
PT 2,5 BU							7		-JB2B -X2	7	**25**			PT 2,5 BU		/12.1.5D	25	-JB4B -X4		7				PTTB 2,5 BU (bottom row)
PT 2,5 BU							8		-JB2B -X2	8	**26**			PT 2,5 BU		/12.1.5D	26	-JB4B -X4		8				(top row)
PT 2,5 BU							9		-JB2B -X2	9	**27**			PT 2,5 BU		/12.1.6D	27	-JB4B -X4		9				PTTB 2,5 BU (bottom row)
PT 2,5 BU							10		-JB2B -X2	10	**28**			PT 2,5 BU		/12.1.6D	28	-JB4B -X4		10				(top row)
PT 2,5 BU							11		-JB2B -X2	11	**29**			PT 2,5 BU		/12.1.6D	29	-JB4B -X4		11				PTTB 2,5 BU (bottom row)
PT 2,5 BU							12		-JB2B -X2	12	**30**			PT 2,5 BU		/12.1.6D	30	-JB4B -X4		12				(top row)
PT 2,5 BU							13		-JB2B -X2	13	**31**			PT 2,5 BU		/12.1.6D	31	-JB4B -X4		13				PTTB 2,5 BU (bottom row)
PT 2,5 BU							14		-JB2B -X2	14	**32**			PT 2,5 BU		/12.1.7D	32	-JB4B -X4		14				(top row)
PT 2,5 BU							15		-JB2B -X2	15	**33**			PT 2,5 BU		/12.1.7D	33	-JB4B -X4		15				PTTB 2,5 BU (bottom row)
PT 2,5 BU							16		-JB2B -X2	16	**34**			PT 2,5 BU		/12.1.7D	34	-JB4B -X4		16				(top row)
PT 2,5 BU							17		-JB2B -X2	17	**35**			PT 2,5 BU		/12.1.7D	35	-JB4B -X4		17				PTTB 2,5 BU (bottom row)
PT 2,5 BU							18		-JB2B -X2	18	**36**			PT 2,5 BU		/12.1.7D	36	-JB4B -X4		18				(top row)
PT 2,5 BU							19		-JB2B -X2	19	**37**			PT 2,5 BU		/12.1.8D	37	-JB4B -X4		19				PTTB 2,5 BU (bottom row)
PT 2,5 BU							20		-JB2B -X2	20	**38**			PT 2,5 BU		/12.1.8D	38	-JB4B -X4		20				(top row)
PT 2,5 BU							21		-JB2B -X2	21	**39**			PT 2,5 BU		/12.1.8D	39	-JB4B -X4		21				PTTB 2,5 BU (bottom row)
PT 2,5 BU							22		-JB2B -X2	22	**40**			PT 2,5 BU		/12.1.8D	40	-JB4B -X4		22				(top row)
PT 2,5 BU							23		-JB2B -X2	23	**41**			PT 2,5 BU		/12.1.8D	41	-JB4B -X4		23				PTTB 2,5 BU (bottom row)
PT 2,5 BU							24		-JB2B -X2	24	**42**			PT 2,5 BU		/12.1.9D	42	-JB4B -X4		24				(top row)
PT 2,5 BU							25		-JB2B -X2	25	**43**			PT 2,5 BU		/12.1.9D	43	-JB4B -X4		25				PTTB 2,5 BU (bottom row)
PT 4-FE								S	-JB3B -X3	S	**S**			PT 4-FE		/12.2.3C								
PT 4-FE							S		-JB2B -X2	S	**S**			PT 4-FE		/12.2.3C								
											S			PT 4-FE		/12.2.3C	S	-JB4B -X4	S					PT 4-FE
											S			PT 4-FE		/12.2.3C	S	-JB4B -X4		S				PT 4-FE

Index	Revision	Date	name				
2	Final as built	19-3-2025	M.Besseling	Drawn:	31-10-2024	elshofjo	
1	For approval	13-11-2024	besselingmi	Engineer:	19-9-2024	besselingmi	
				Approved:			
				Changed:			

KANON LOADING EQUIPMENT B.V.

Ref: P242068, B242352 Quote:

Order: 2011280786 Item: 001000

KANON LOADING EQUIPMENT

www.kanon.nl

Electromach BV
Jan Tinbergenstraat 193
7559 SP Hengelo
The Netherlands

Terminal diagram

Int. Revision :

Drawing No.:
2011280786-001000-24

Refer to protection notice ISO 16016

P242068A91

+MLA-B-JB1B-X1

Scale: 1 mm : 1 mm / A3

Sheet: 370 page 1 / 1

Terminal diagram

+MLA-B-JB2B-X2

External cable								-W212 OZ-BL-CY 25 x 0,75 mm²	General remarks		Terminal block : -X2						Number of terminals : 26		-W221.1 ERC QCDC cable	-W212 OZ-BL-CY 25 x 0,75 mm²				Internal cable
									External destination		Terminal number	Wire jumper	Jumper	Terminal type	Terminal number	Cross-reference	Internal destination							
Comment									Device	Pin							Pin	Device						Comment
PT 2,5 BU								1	-JB1B -X1	19	1			PT 2,5 BU		/12.1.4B	1	-XQC-B	1					
PT 2,5 BU								2	-JB1B -X1	20	2			PT 2,5 BU		/12.1.4B	2	-XQC-B	2					
									-12S7.1	BN	3			PT 2,5 BU		/12.1.4B	21	-JB1B -X1		3				PT 2,5 BU
									-12S7.1	BU	4			PT 2,5 BU		/12.1.5B	22	-JB1B -X1		4				PT 2,5 BU
									-12S7.3	BN	5			PT 2,5 BU		/12.1.5B	23	-JB1B -X1		5				PT 2,5 BU
									-12S7.3	BU	6			PT 2,5 BU		/12.1.5B	24	-JB1B -X1		6				PT 2,5 BU
									-12S7.4	BN	7			PT 2,5 BU		/12.1.5B	25	-JB1B -X1		7				PT 2,5 BU
									-12S7.4	BU	8			PT 2,5 BU		/12.1.5B	26	-JB1B -X1		8				PT 2,5 BU
									-12S8.1	BN	9			PT 2,5 BU		/12.1.6B	27	-JB1B -X1		9				PT 2,5 BU
									-12S8.1	BU	10			PT 2,5 BU		/12.1.6B	28	-JB1B -X1		10				PT 2,5 BU
									-12S8.2	BN	11			PT 2,5 BU		/12.1.6B	29	-JB1B -X1		11				PT 2,5 BU
									-12S8.2	BU	12			PT 2,5 BU		/12.1.6B	30	-JB1B -X1		12				PT 2,5 BU
									-12S8.3	BN	13			PT 2,5 BU		/12.1.6B	31	-JB1B -X1		13				PT 2,5 BU
									-12S8.3	BU	14			PT 2,5 BU		/12.1.7B	32	-JB1B -X1		14				PT 2,5 BU
											15			PT 2,5 BU		/12.1.7B	33	-JB1B -X1		15				PT 2,5 BU
											16			PT 2,5 BU		/12.1.7B	34	-JB1B -X1		16				PT 2,5 BU
											17			PT 2,5 BU		/12.1.7B	35	-JB1B -X1		17				PT 2,5 BU
											18			PT 2,5 BU		/12.1.7B	36	-JB1B -X1		18				PT 2,5 BU
											19			PT 2,5 BU		/12.1.8B	37	-JB1B -X1		19				PT 2,5 BU
											20			PT 2,5 BU		/12.1.8B	38	-JB1B -X1		20				PT 2,5 BU
											21			PT 2,5 BU		/12.1.8B	39	-JB1B -X1		21				PT 2,5 BU
											22			PT 2,5 BU		/12.1.8B	40	-JB1B -X1		22				PT 2,5 BU
											23			PT 2,5 BU		/12.1.8B	41	-JB1B -X1		23				PT 2,5 BU
											24			PT 2,5 BU		/12.1.9B	42	-JB1B -X1		24				PT 2,5 BU
											25			PT 2,5 BU		/12.1.9B	43	-JB1B -X1		25				PT 2,5 BU
											S			PT 4-FE		/12.2.4B	S	-JB1B -X1		S				PT 4-FE

Index	Revision	Date	name
2	Final as built	19-3-2025	M.Besseling
1	For approval	13-11-2024	besselingmi

Drawn:	31-10-2024	elshofjo	
Engineer:	19-9-2024	besselingmi	
Approved:			
Changed:			

KANON LOADING EQUIPMENT B.V.

Ref: P242068, B242352 Quote:

Order: 2011280786 Item: 001000

KANON LOADING EQUIPMENT

www.kanon.nl

Electromach BV
Jan Tinbergenstraat 193
7559 SP Hengelo
The Netherlands
US

Terminal diagram

Int. Revision :

Drawing No.:
2011280786-001000-24

Refer to protection notice ISO 16016

P242068A91

+MLA-B-JB2B-X2

Scale: 1 mm : 1 mm / A3

Sheet: 371 page 1 / 1

Terminal diagram

+MLA-B-JB3B-X3

External cable									General remarks		Terminal block : -X3						Number of terminals : 9		-W211 OZ-BL-CY 8 x 0,75 mm²					Internal cable
									External destination								Internal destination							
Comment									Device	Pin	Terminal number	Wire jumper	Jumper	Terminal type	Terminal number	Cross-reference	Pin	Device						Comment
									-12S1.1	BN	1			PT 2,5 BU		/12.1.0B	1	-JB1B -X1	1					PT 2,5 BU
									-12S1.1	BU	2			PT 2,5 BU		/12.1.1B	2	-JB1B -X1	2					PT 2,5 BU
									-12S1.2	BN	3			PT 2,5 BU		/12.1.1B	3	-JB1B -X1	3					PT 2,5 BU
									-12S1.2	BU	4			PT 2,5 BU		/12.1.1B	4	-JB1B -X1	4					PT 2,5 BU
									-12S2	BN	5			PT 2,5 BU		/12.1.1B	5	-JB1B -X1	5					PT 2,5 BU
									-12S2	BU	6			PT 2,5 BU		/12.1.1B	6	-JB1B -X1	6					PT 2,5 BU
											7			PT 2,5 BU		/12.1.2B	7	-JB1B -X1	7					PT 2,5 BU
											8			PT 2,5 BU		/12.1.2B	8	-JB1B -X1	8					PT 2,5 BU
											S			PT 4-FE		/12.2.3B	S	-JB1B -X1	S					PT 4-FE

Index	Revision	Date	name									
2	Final as built	19-3-2025	M.Besseling	Drawn:	31-10-2024	elshofjo	KANON LOADING EQUIPMENT B.V.		Electromach BV	Terminal diagram	Int. Revision :	P242068A91
1	For approval	13-11-2024	besselingmi	Engineer:	19-9-2024	besselingmi			Jan Tinbergenstraat 193		Drawing No.:	+MLA-B-JB3B-X3
				Approved:			Ref: P242068, B242352	Quote:	7559 SP Hengelo		2011280786-001000-24	Scale: 1 mm : 1 mm / A3
				Changed:			Order: 2011280786	Item: 001000	The Netherlands		Refer to protection notice ISO 16016	Sheet: 372 page 1 / 1

KANON LOADING EQUIPMENT

www.kanon.nl

Terminal diagram

+MLA-B-JB4B-X4

External cable						+JETTY -W202-3 OZ-BL-CY 12 x 0,75 mm²	+JETTY -W202-2 OZ-BL-CY 25 x 0,75 mm²	+JETTY -W202-1 OZ-BL-CY 18 x 0,75 mm²	General remarks		Terminal block : -X4						Number of terminals : 61		-W241 OZ-BL-CY 18 x 0,75 mm²	-W242 OZ-BL-CY 25 x 0,75 mm²	-W243 OZ-BL-CY 2 x 0,75 mm²			Internal cable
									External destination		Terminal number	Wire jumper	Jumper	Terminal type	Terminal number	Cross-reference	Internal destination						
Comment									Device	Pin							Pin	Device					Comment
PT 2,5 BU								1	-ETB2 -XiLA2	1	**1**			PTTB 2,5 BU (bottom row)		/12.1.0E	1	-JB1B -X1	1				PT 2,5 BU
PT 2,5 BU								2	-ETB2 -XiLA2	2	**2**			(top row)		/12.1.1E	2	-JB1B -X1	2				PT 2,5 BU
PT 2,5 BU								3	-ETB2 -XiLA2	3	**3**			PTTB 2,5 BU (bottom row)		/12.1.1E	3	-JB1B -X1	3				PT 2,5 BU
PT 2,5 BU								4	-ETB2 -XiLA2	4	**4**			(top row)		/12.1.1E	4	-JB1B -X1	4				PT 2,5 BU
PT 2,5 BU								5	-ETB2 -XiLA2	5	**5**			PTTB 2,5 BU (bottom row)		/12.1.1E	5	-JB1B -X1	5				PT 2,5 BU
PT 2,5 BU								6	-ETB2 -XiLA2	6	**6**			(top row)		/12.1.1E	6	-JB1B -X1	6				PT 2,5 BU
PT 2,5 BU								7	-ETB2 -XiLA2	7	**7**			PTTB 2,5 BU (bottom row)		/12.1.2E	7	-JB1B -X1	7				PT 2,5 BU
PT 2,5 BU								8	-ETB2 -XiLA2	8	**8**			(top row)		/12.1.2E	8	-JB1B -X1	8				PT 2,5 BU
PT 2,5 BU								9	-ETB2 -XiLA2	9	**9**			PTTB 2,5 BU (bottom row)		/12.1.2E	9	-JB1B -X1	9				PT 2,5 BU
PT 2,5 BU								10	-ETB2 -XiLA2	10	**10**			(top row)		/12.1.2E	10	-JB1B -X1	10				PT 2,5 BU
PT 2,5 BU								11	-ETB2 -XiLA2	11	**11**			PTTB 2,5 BU (bottom row)		/12.1.2E	11	-JB1B -X1	11				PT 2,5 BU
PT 2,5 BU								12	-ETB2 -XiLA2	12	**12**			(top row)		/12.1.3E	12	-JB1B -X1	12				PT 2,5 BU
PT 2,5 BU								13	-ETB2 -XiLA2	13	**13**			PTTB 2,5 BU (bottom row)		/12.1.3E	13	-JB1B -X1	13				PT 2,5 BU
PT 2,5 BU								14	-ETB2 -XiLA2	14	**14**			(top row)		/12.1.3E	14	-JB1B -X1	14				PT 2,5 BU
PT 2,5 BU								15	-ETB2 -XiLA2	15	**15**			PTTB 2,5 BU (bottom row)		/12.1.3E	15	-JB1B -X1	15				PT 2,5 BU
PT 2,5 BU								16	-ETB2 -XiLA2	16	**16**			(top row)		/12.1.3E	16	-JB1B -X1	16				PT 2,5 BU
PT 2,5 BU								17	-ETB2 -XiLA2	17	**17**			PTTB 2,5 BU (bottom row)		/12.1.4E	17	-JB1B -X1	17				PT 2,5 BU
PT 2,5 BU								18	-ETB2 -XiLA2	18	**18**			(top row)		/12.1.4E	18	-JB1B -X1	18				PT 2,5 BU
PT 2,5 BU							1		-ETB2 -XiLA2	19	**19**			PTTB 2,5 BU (bottom row)		/12.1.4E	19	-JB1B -X1		1			PT 2,5 BU
PT 2,5 BU							2		-ETB2 -XiLA2	20	**20**			(top row)		/12.1.4E	20	-JB1B -X1		2			PT 2,5 BU
PT 2,5 BU							3		-ETB2 -XiLA2	21	**21**			PTTB 2,5 BU (bottom row)		/12.1.4E	21	-JB1B -X1		3			PT 2,5 BU
PT 2,5 BU							4		-ETB2 -XiLA2	22	**22**			(top row)		/12.1.5E	22	-JB1B -X1		4			PT 2,5 BU
PT 2,5 BU							5		-ETB2 -XiLA2	23	**23**			PTTB 2,5 BU (bottom row)		/12.1.5E	23	-JB1B -X1		5			PT 2,5 BU
PT 2,5 BU							6		-ETB2 -XiLA2	24	**24**			(top row)		/12.1.5E	24	-JB1B -X1		6			PT 2,5 BU
PT 2,5 BU							7		-ETB2 -XiLA2	25	**25**			PTTB 2,5 BU (bottom row)		/12.1.5E	25	-JB1B -X1		7			PT 2,5 BU
PT 2,5 BU							8		-ETB2 -XiLA2	26	**26**			(top row)		/12.1.5E	26	-JB1B -X1		8			PT 2,5 BU
PT 2,5 BU							9		-ETB2 -XiLA2	27	**27**			PTTB 2,5 BU (bottom row)		/12.1.6E	27	-JB1B -X1		9			PT 2,5 BU
PT 2,5 BU							10		-ETB2 -XiLA2	28	**28**			(top row)		/12.1.6E	28	-JB1B -X1		10			PT 2,5 BU
PT 2,5 BU							11		-ETB2 -XiLA2	29	**29**			PTTB 2,5 BU (bottom row)		/12.1.6E	29	-JB1B -X1		11			PT 2,5 BU
PT 2,5 BU							12		-ETB2 -XiLA2	30	**30**			(top row)		/12.1.6E	30	-JB1B -X1		12			PT 2,5 BU
PT 2,5 BU							13		-ETB2 -XiLA2	31	**31**			PTTB 2,5 BU (bottom row)		/12.1.6E	31	-JB1B -X1		13			PT 2,5 BU
PT 2,5 BU							14		-ETB2 -XiLA2	32	**32**			(top row)		/12.1.7E	32	-JB1B -X1		14			PT 2,5 BU
PT 2,5 BU							15		-ETB2 -XiLA2	33	**33**			PTTB 2,5 BU (bottom row)		/12.1.7E	33	-JB1B -X1		15			PT 2,5 BU
PT 2,5 BU							16		-ETB2 -XiLA2	34	**34**			(top row)		/12.1.7E	34	-JB1B -X1		16			PT 2,5 BU
PT 2,5 BU							17		-ETB2 -XiLA2	35	**35**			PTTB 2,5 BU (bottom row)		/12.1.7E	35	-JB1B -X1		17			PT 2,5 BU
PT 2,5 BU							18		-ETB2 -XiLA2	36	**36**			(top row)		/12.1.7E	36	-JB1B -X1		18			PT 2,5 BU
PT 2,5 BU							19		-ETB2 -XiLA2	37	**37**			PTTB 2,5 BU (bottom row)		/12.1.8E	37	-JB1B -X1		19			PT 2,5 BU
PT 2,5 BU							20		-ETB2 -XiLA2	38	**38**			(top row)		/12.1.8E	38	-JB1B -X1		20			PT 2,5 BU
PT 2,5 BU							21		-ETB2 -XiLA2	39	**39**			PTTB 2,5 BU (bottom row)		/12.1.8E	39	-JB1B -X1		21			PT 2,5 BU
PT 2,5 BU							22		-ETB2 -XiLA2	40	**40**			(top row)		/12.1.8E	40	-JB1B -X1		22			PT 2,5 BU
PT 2,5 BU							23		-ETB2 -XiLA2	41	**41**			PTTB 2,5 BU (bottom row)		/12.1.8E	41	-JB1B -X1		23			PT 2,5 BU
PT 2,5 BU							24		-ETB2 -XiLA2	42	**42**			(top row)		/12.1.9E	42	-JB1B -X1		24			PT 2,5 BU
PT 2,5 BU							25		-ETB2 -XiLA2	43	**43**			PTTB 2,5 BU (bottom row)		/12.1.9E	43	-JB1B -X1		25			PT 2,5 BU
											44			(top row)		/12.1.9E							
PT 2,5 BU						1			-ETB2 -XiLA2	45	**45**			PTTB 2,5 BU (bottom row)		/12.2.0E	BN	-12S4.2					
PT 2,5 BU						2			-ETB2 -XiLA2	46	**46**			(top row)		/12.2.0E	BU	-12S4.2					
PT 2,5 BU						3			-ETB2 -XiLA2	47	**47**			PTTB 2,5 BU (bottom row)		/12.2.1E	BN	-12S4.4					
PT 2,5 BU						4			-ETB2 -XiLA2	48	**48**			(top row)		/12.2.1E	BU	-12S4.4					
PT 2,5 BU						5			-ETB2 -XiLA2	49	**49**			PTTB 2,5 BU (bottom row)		/12.2.1E		-12PT5			1		

Index	Revision	Date	name
2	*Final as built*	*19-3-2025*	*M.Besseling*
1	*For approval*	*13-11-2024*	*besselingmi*

Drawn: *31-10-2024* *elshofjo*
Engineer: *19-9-2024* *besselingmi*
Approved:
Changed:

KANON LOADING EQUIPMENT B.V.

Ref: *P242068, B242352* Quote:
Order: *2011280786* Item: *001000*

KANON LOADING EQUIPMENT
www.kanon.nl

Electromach BV
Jan Tinbergenstraat 193
7559 SP Hengelo
The Netherlands

Terminal diagram

Int. Revision : *P242068A91*
Drawing No.: *+MLA-B-JB4B-X4*
2011280786-001000-24
Scale: *1 mm : 1 mm / A3*
Refer to protection notice ISO 16016
Sheet: *373* page *1 / 2*

Terminal diagram

+MLA-B-JB4B-X4

External cable					-W242 OZ-BL-CY 25 x 0,75 mm²	-W241 OZ-BL-CY 18 x 0,75 mm²	-W243 OZ-BL-CY 2 x 0,75 mm²	+JETTY-W202-3 OZ-BL-CY 12 x 0,75 mm²	General remarks / External destination		Terminal block : -X4						Number of terminals : 61 / Internal destination		-W243 OZ-BL-CY 2 x 0,75 mm²	+JETTY-W202-1 OZ-BL-CY 18 x 0,75 mm²	+JETTY-W202-2 OZ-BL-CY 25 x 0,75 mm²			Internal cable
Comment									Device	Pin	Terminal number	Wire jumper	Jumper	Terminal type	Terminal number	Cross-reference	Pin	Device						Comment
PT 2,5 BU								6	-ETB2 -XiLA2	50	**50**			(top row)		/12.2.1E		-12PT5	2					
PT 2,5 BU								7	-ETB2 -XiLA2	51	**51**			PTTB 2,5 BU (bottom row)		/12.2.1E								
PT 2,5 BU								8	-ETB2 -XiLA2	52	**52**			(top row)		/12.2.1E								
PT 2,5 BU								9	-ETB2 -XiLA2	53	**53**			PTTB 2,5 BU (bottom row)		/12.2.2E								
PT 2,5 BU								10	-ETB2 -XiLA2	54	**54**			(top row)		/12.2.2E								
PT 2,5 BU								11	-ETB2 -XiLA2	55	**55**			PTTB 2,5 BU (bottom row)		/12.2.2E								
PT 2,5 BU								12	-ETB2 -XiLA2	56	**56**			(top row)		/12.2.2E								
							S		-12PT5		**S**	●		PT 4-FE		/12.2.3E	TE	-ETB2		S				
											S	●		PT 4-FE		/12.2.3E	TE	-ETB2			S			
								S	-ETB2	TE	**S**	●		PT 4-FE		/12.2.3E								
PT 4-FE						S			-JB1B -X1	S	**S**	●		PT 4-FE		/12.2.3E								
PT 4-FE					S				-JB1B -X1	S	**S**	●		PT 4-FE		/12.2.3E								

Index	Revision	Date	name				
2	Final as built	19-3-2025	M.Besseling	Drawn:	31-10-2024	elshofjo	
1	For approval	13-11-2024	besselingmi	Engineer:	19-9-2024	besselingmi	
				Approved:			
				Changed:			

KANON LOADING EQUIPMENT B.V.

Ref: P242068, B242352 Quote:

Order: 2011280786 Item: 001000

KANON LOADING EQUIPMENT

www.kanon.nl

Electromach BV
Jan Tinbergenstraat 193
7559 SP Hengelo
The Netherlands

Terminal diagram

Int. Revision :

Drawing No.: 2011280786-001000-24

Refer to protection notice ISO 16016

P242068A91

+MLA-B-JB4B-X4

Scale: 1 mm : 1 mm / A3

Sheet: 373 page 2 / 2

Terminal diagram

+MLA-B-JB5B-X5

External cable									General remarks		Terminal block : -X5						Number of terminals : 35		+JETTY -W201 KVCY Dca 25 x 1,5 mm²					Internal cable
Comment									External destination		Terminal number	Wire jumper	Jumper	Terminal type	Terminal number	Cross-reference	Internal destination							Comment
									Device	Pin							Pin	Device						
									-Y1	1	**1**			PT 2,5		/12.3.0B	1	-ETB1 -XLA2	1					PT 2,5
									-Y2	1	**2**			PT 2,5		/12.3.0B	2	-ETB1 -XLA2	2					PT 2,5
									-Y3	1	**3**			PT 2,5		/12.3.0B	3	-ETB1 -XLA2	3					PT 2,5
									-Y4	1	**4**			PT 2,5		/12.3.1B	4	-ETB1 -XLA2	4					PT 2,5
									-Y5	1	**5**			PT 2,5		/12.3.1B	5	-ETB1 -XLA2	5					PT 2,5
									-Y6	1	**6**			PT 2,5		/12.3.1B	6	-ETB1 -XLA2	6					PT 2,5
									-Y11	1	**7**			PT 2,5		/12.3.1B	7	-ETB1 -XLA2	7					PT 2,5
									-Y12	1	**8**			PT 2,5		/12.3.1B	8	-ETB1 -XLA2	8					PT 2,5
									-Y7.1	1	**9**			PT 2,5		/12.3.1B	9	-ETB1 -XLA2	9					PT 2,5
									-Y7.2	1	**10**			PT 2,5		/12.3.1B	10	-ETB1 -XLA2	10					PT 2,5
									-Y8.1	1	**11**			PT 2,5		/12.3.1B	11	-ETB1 -XLA2	11					PT 2,5
									-Y8.2	1	**12**			PT 2,5		/12.3.1B	12	-ETB1 -XLA2	12					PT 2,5
									-Y9.1	1	**13**			PT 2,5		/12.3.1B	13	-ETB1 -XLA2	13					PT 2,5
									-Y9.2	1	**14**			PT 2,5		/12.3.2B	14	-ETB1 -XLA2	14					PT 2,5
									-Y9.3	1	**15**			PT 2,5		/12.3.2B	15	-ETB1 -XLA2	15					PT 2,5
									-Y13	1	**16**			PT 2,5		/12.3.2B	16	-ETB1 -XLA2	16					PT 2,5
									-Y14	1	**17**			PT 2,5		/12.3.2B	17	-ETB1 -XLA2	17					PT 2,5
									-Y1	3	**18**			PT 2,5		/12.3.7B	18	-ETB1 -XLA2	18					PT 2,5
									-Y2	3	**19**			PT 2,5		/12.3.7B	19	-ETB1 -XLA2	19					PT 2,5
									-Y3	3	**20**			PT 2,5		/12.3.7B	20	-ETB1 -XLA2	20					PT 2,5
									-Y4	3	**21**			PT 2,5		/12.3.8B	21	-ETB1 -XLA2	21					PT 2,5
									-Y5	3	**22**			PT 2,5		/12.3.8B	22	-ETB1 -XLA2	22					PT 2,5
									-Y6	3	**23**			PT 2,5		/12.3.8B								
									-Y11	3	**24**			PT 2,5		/12.3.8B								
									-Y12	3	**25**			PT 2,5		/12.3.8B								
									-Y7.1	3	**26**			PT 2,5		/12.3.8B								
									-Y7.2	3	**27**			PT 2,5		/12.3.8B								
									-Y9.1	3	**28**			PT 2,5		/12.3.8B								
									-Y9.2	3	**29**			PT 2,5		/12.3.8B								
									-Y9.3	3	**30**			PT 2,5		/12.3.8B								
									-Y13	3	**31**			PT 2,5		/12.3.9B								
									-Y14	3	**32**			PT 2,5		/12.3.9B								
									-Y8.1	3	**33**			PT 2,5		/12.3.9B	23	-ETB1 -XLA2	23					PT 2,5
									-Y8.2	3	**34**			PT 2,5		/12.3.9B	24	-ETB1 -XLA2	24					PT 2,5
											PE			PT 2,5 PE		/12.3.9B								

Index	Revision	Date	name
2	Final as built	19-3-2025	M.Besseling
1	For approval	13-11-2024	besselingmi

Drawn:	31-10-2024	elshofjo	
Engineer:	19-9-2024	besselingmi	
Approved:			
Changed:			

KANON LOADING EQUIPMENT B.V.

Ref: P242068, B242352 Quote:

Order: 2011280786 Item: 001000

KANON LOADING EQUIPMENT

www.kanon.nl

Electromach BV
Jan Tinbergenstraat 193
7559 SP Hengelo
The Netherlands
US

Terminal diagram

Int. Revision : P242068A91

Drawing No.: +MLA-B-JB5B-X5

2011280786-001000-24

Scale: 1 mm : 1 mm / A3

Refer to protection notice ISO 16016

Sheet: 374 page 1 / 1

Terminal diagram

+MLA-B-JB6B-X6

External cable		+JETTY -W203 OZ-BL-CY 18 x 0,75 mm²	+Valve block -W14FB	+Valve block -W13FB	+Valve block -W8.2FB	+Valve block -W8.1FB	+Valve block -W7.2FB	+Valve block -W7.1FB	General remarks		Terminal block : -X6						Number of terminals : 37		+JETTY -W203 OZ-BL-CY 18 x 0,75 mm²					Internal cable
									External destination		Terminal number	Wire jumper	Jumper	Terminal type	Terminal number	Cross-reference	Internal destination						
Comment									Device	Pin							Pin	Device						Comment
								1	-Y7.1	BN	**1**			PTTB 2,5 BU (bottom row)		/12.2.4E	1	-ETB2 -XiYLA2	1					PT 2,5 BU
								2	-Y7.1	WH	**2**			(top row)		/12.2.4E	2	-ETB2 -XiYLA2	2					PT 2,5 BU
								3	-Y7.1		**1'**			PTTB 2,5 BU (bottom row)		/12.2.4E								
								4	-Y7.1		**2'**			(top row)		/12.2.4E								
							1		-Y7.2	BN	**3**			PTTB 2,5 BU (bottom row)		/12.2.5E	3	-ETB2 -XiYLA2	3					PT 2,5 BU
							2		-Y7.2	WH	**4**			(top row)		/12.2.5E	4	-ETB2 -XiYLA2	4					PT 2,5 BU
							3		-Y7.2		**3'**			PTTB 2,5 BU (bottom row)		/12.2.5E								
							4		-Y7.2		**4'**			(top row)		/12.2.5E								
						1			-Y8.1	BN	**5**			PTTB 2,5 BU (bottom row)		/12.2.5E	5	-ETB2 -XiYLA2	5					PT 2,5 BU
						2			-Y8.1	WH	**6**			(top row)		/12.2.5E	6	-ETB2 -XiYLA2	6					PT 2,5 BU
						3			-Y8.1		**5'**			PTTB 2,5 BU (bottom row)		/12.2.5E								
						4			-Y8.1		**6'**			(top row)		/12.2.6E								
					1				-Y8.2	BN	**7**			PTTB 2,5 BU (bottom row)		/12.2.6E	7	-ETB2 -XiYLA2	7					PT 2,5 BU
					2				-Y8.2	WH	**8**			(top row)		/12.2.6E	8	-ETB2 -XiYLA2	8					PT 2,5 BU
					3				-Y8.2		**7'**			PTTB 2,5 BU (bottom row)		/12.2.6E								
					4				-Y8.2		**8'**			(top row)		/12.2.6E								
				1					-Y13	BN	**9**			PTTB 2,5 BU (bottom row)		/12.2.6E	9	-ETB2 -XiYLA2	9					PT 2,5 BU
				2					-Y13	WH	**10**			(top row)		/12.2.7E	10	-ETB2 -XiYLA2	10					PT 2,5 BU
				3					-Y13		**9'**			PTTB 2,5 BU (bottom row)		/12.2.7E								
				4					-Y13		**10'**			(top row)		/12.2.7E								
			1						-Y14	BN	**11**			PTTB 2,5 BU (bottom row)		/12.2.7E	11	-ETB2 -XiYLA2	11					PT 2,5 BU
			2						-Y14	WH	**12**			(top row)		/12.2.7E	12	-ETB2 -XiYLA2	12					PT 2,5 BU
			3						-Y14		**11'**			PTTB 2,5 BU (bottom row)		/12.2.7E								
			4						-Y14		**12'**			(top row)		/12.2.7E								
PT 2,5 BU		13							-ETB2 -XiYLA2	13	**13**			PTTB 2,5 BU (bottom row)		/12.2.8E								
PT 2,5 BU		14							-ETB2 -XiYLA2	14	**14**			(top row)		/12.2.8E								
											13'			PTTB 2,5 BU (bottom row)		/12.2.8E								
											14'			(top row)		/12.2.8E								
PT 2,5 BU		15							-ETB2 -XiYLA2	15	**15**			PTTB 2,5 BU (bottom row)		/12.2.8E								
PT 2,5 BU		16							-ETB2 -XiYLA2	16	**16**			(top row)		/12.2.8E								
											15'			PTTB 2,5 BU (bottom row)		/12.2.8E								
											16'			(top row)		/12.2.9E								
PT 2,5 BU		17							-ETB2 -XiYLA2	17	**17**			PTTB 2,5 BU (bottom row)		/12.2.9E								
PT 2,5 BU		18							-ETB2 -XiYLA2	18	**18**			(top row)		/12.2.9E								
											17'			PTTB 2,5 BU (bottom row)		/12.2.9E								
											18'			(top row)		/12.2.9E								
											S			PT 4-FE		/12.2.9E	TE	-ETB2	S					

Index	Revision	Date	name
2	Final as built	19-3-2025	M.Besseling
1	For approval	13-11-2024	besselingmi

Drawn:	31-10-2024	elshofjo	
Engineer:	19-9-2024	besselingmi	
Approved:			
Changed:			

KANON LOADING EQUIPMENT B.V.

Ref: P242068, B242352 Quote:

Order: 2011280786 Item: 001000

KANON LOADING EQUIPMENT

www.kanon.nl

Electromach BV
Jan Tinbergenstraat 193
7559 SP Hengelo
The Netherlands
US

Terminal diagram

Int. Revision : P242068A91

Drawing No.: 2011280786-001000-24 | +MLA-B-JB6B-X6

Refer to protection notice ISO 16016

Scale: 1 mm : 1 mm / A3

Sheet: 375 | page 1 / 1

Terminal diagram

+MLA-B-JB8B-X8

External cable									General remarks		Terminal block : -X8						Number of terminals : 2		-W221.2 ERC QCDC cable					Internal cable
									External destination		Terminal number	Wire jumper	Jumper	Terminal type	Terminal number	Cross-reference	Internal destination							
Comment									Device	Pin							Pin	Device						Comment
									-12S7.2	BN	1			PT 2,5 BU		/12.1.4A	1	-XQC-B	1					
									-12S7.2	BU	2			PT 2,5 BU		/12.1.4A	2	-XQC-B	2					

Index	Revision	Date	name										
2	Final as built	19-3-2025	M.Besseling	Drawn:	31-10-2024	elshofjo	KANON LOADING EQUIPMENT B.V.	KANON LOADING EQUIPMENT www.kanon.nl	Electromach BV Jan Tinbergenstraat 193 7559 SP Hengelo The Netherlands	Terminal diagram	Int. Revision :	P242068A91	
1	For approval	13-11-2024	besselingmi	Engineer:	19-9-2024	besselingmi					Drawing No.: 2011280786-001000-24	+MLA-B-JB8B-X8	
				Approved:			Ref: P242068, B242352	Quote:				Scale: 1 mm : 1 mm / A3	
				Changed:			Order: 2011280786	Item: 001000			Refer to protection notice ISO 16016	Sheet: 376	page 1 / 1

Terminal diagram

+MLA-B-JB11B-X11

General remarks

Terminal block : -X11

Number of terminals : 12

External cable								-W281 KVCY Dca 12 x 1,5 mm²	External destination		Terminal number	Wire jumper	Jumper	Terminal type	Terminal number	Cross-reference	Internal destination		+JETTY -W204 KVCY Dca 12 x 1,5 mm²					Internal cable
Comment									Device	Pin							Pin	Device						Comment
PT 2,5								1	-JB12B -X12	1	**1**			PT 2,5		/12.4.0B	1	-ETB1 -XYLA2	1					PT 2,5
PT 2,5								2	-JB12B -X12	2	**2**			PT 2,5		/12.4.0B	2	-ETB1 -XYLA2	2					PT 2,5
PT 2,5								3	-JB12B -X12	3	**3**			PT 2,5		/12.4.0B	3	-ETB1 -XYLA2	3					PT 2,5
PT 2,5								4	-JB12B -X12	4	**4**			PT 2,5		/12.4.1B	4	-ETB1 -XYLA2	4					PT 2,5
PT 2,5								5	-JB12B -X12	5	**5**			PT 2,5		/12.4.1B	5	-ETB1 -XYLA2	5					PT 2,5
PT 2,5								6	-JB12B -X12	6	**6**			PT 2,5		/12.4.1B	6	-ETB1 -XYLA2	6					PT 2,5
PT 2,5								7	-JB12B -X12	7	**7**			PT 2,5		/12.4.7B	7	-ETB1 -XYLA2	7					PT 2,5
PT 2,5								8	-JB12B -X12	8	**8**			PT 2,5		/12.4.7B	8	-ETB1 -XYLA2	8					PT 2,5
PT 2,5								9	-JB12B -X12	9	**9**			PT 2,5		/12.4.7B	9	-ETB1 -XYLA2	9					PT 2,5
PT 2,5								10	-JB12B -X12	10	**10**			PT 2,5		/12.4.8B	10	-ETB1 -XYLA2	10					PT 2,5
PT 2,5								11	-JB12B -X12	11	**11**			PT 2,5		/12.4.8B	11	-ETB1 -XYLA2	11					PT 2,5
											PE			PT 2,5 PE		/12.4.8B								

Index	Revision	Date	name
2	Final as built	19-3-2025	M.Besseling
1	For approval	13-11-2024	besselingmi

Drawn: 31-10-2024 elshofjo
Engineer: 19-9-2024 besselingmi
Approved:
Changed:

KANON LOADING EQUIPMENT B.V.

Ref: P242068, B242352 Quote:
Order: 2011280786 Item: 001000

KANON LOADING EQUIPMENT
www.kanon.nl

Electromach BV
Jan Tinbergenstraat 193
7559 SP Hengelo
The Netherlands

Terminal diagram

Int. Revision :
Drawing No.: 2011280786-001000-24
Refer to protection notice ISO 16016

P242068A91
+MLA-B-JB11B-X11
Scale: 1 mm : 1 mm / A3
Sheet: 377 page 1 / 1

Terminal diagram

+MLA-B-JB12B-X12

External cable									General remarks		Terminal block : -X12						Number of terminals : 12		-W281 KVCY Dca 12 x 1,5 mm²					Internal cable
									External destination								Internal destination							
Comment									Device	Pin	Terminal number	Wire jumper	Jumper	Terminal type	Terminal number	Cross-reference	Pin	Device						Comment
											1			PT 2,5		/12.4.0C	1	-JB11B -X11	1					PT 2,5
											2			PT 2,5		/12.4.0C	2	-JB11B -X11	2					PT 2,5
											3			PT 2,5		/12.4.0C	3	-JB11B -X11	3					PT 2,5
											4			PT 2,5		/12.4.1C	4	-JB11B -X11	4					PT 2,5
											5			PT 2,5		/12.4.1C	5	-JB11B -X11	5					PT 2,5
											6			PT 2,5		/12.4.1C	6	-JB11B -X11	6					PT 2,5
											7			PT 2,5		/12.4.7C	7	-JB11B -X11	7					PT 2,5
											8			PT 2,5		/12.4.7C	8	-JB11B -X11	8					PT 2,5
											9			PT 2,5		/12.4.7C	9	-JB11B -X11	9					PT 2,5
											10			PT 2,5		/12.4.8C	10	-JB11B -X11	10					PT 2,5
											11			PT 2,5		/12.4.8C	11	-JB11B -X11	11					PT 2,5
											PE			PT 2,5 PE		/12.4.8C								

Index	Revision	Date	name			
2	Final as built	19-3-2025	M.Besseling	Drawn:	31-10-2024	elshofjo
1	For approval	13-11-2024	besselingmi	Engineer:	19-9-2024	besselingmi
				Approved:		
				Changed:		

KANON LOADING EQUIPMENT B.V.

Ref: P242068, B242352 | Quote:

Order: 2011280786 | Item: 001000

KANON LOADING EQUIPMENT

www.kanon.nl

Electromach BV
Jan Tinbergenstraat 193
7559 SP Hengelo
The Netherlands

Terminal diagram

Int. Revision : P242068A91

Drawing No.: +MLA-B-JB12B-X12

2011280786-001000-24

Scale: 1 mm : 1 mm / A3

Refer to protection notice ISO 16016

Sheet: 378 page 1 / 1

MARINE LOADING ARMS

P&ID

Tag# Kanon LE	Tag# client
P242068A10	MLA–A
P242068B10	MLA–B

This document is confidential and the information contained herein is a confidential disclosure. It is shown on the understanding it is not to be revealed to others or used for any other purpose without the written consent of KANON LOADING EQUIPMENT B.V.

Rev. 3						
Rev. 2						
Rev. 1						
Check			Length -and angle tolerances acc. to ISO 2768-1, class C	Form -and place tolerances acc. to ISO 2768-2, class K	Roughness according to ISO 4287, Ra in µm	Units in mm
Drawn	01-10-2024	ZUL	P & ID diagram			
Scale: N.T.S.		A3	For marine loading arm			

KANON
LOADING EQUIPMENT
P.O. Box 385, 3840 AJ Harderwijk

American Projection

Drawing number	Sheet	Revision
P242068A92	1	1

SHEET NO	DESCRIPTION	INT. REV.	01-10-2024 REVISION POSITION 0	1	2	3	4	5	6	7	8	9
1	COVER SHEET		0									
2	INDEX SHEET		0									
3	LEGEND SHEET		0									
4	P&ID LOADING ARM MLA: MLA A		0									
5	P&ID LOADING ARM MLA: MLA B		0									

LOADING ARM P&ID
LOADING ARM P&ID
LOADING ARM
LOADING ARM
LOADING ARM

This document is confidential and the information contained herein is a confidential disclosure. It is shown on the understanding it is not to be revealed to others or used for any other purpose without the written consent of KANON LOADING EQUIPMENT B.V.

Rev. 3			
Rev. 2			
Rev. 1			
Check			Length -and angle tolerances acc. to ISO 2768-1, class C / Form -and place tolerances acc. to ISO 2768-2, class K / Roughness according to ISO 4287, Ra in µm / Units in mm
Drawn	01-10-2024	ZUL	
Scale: N.T.S.		A3	

Index sheet

For marine loading arm

KANON
LOADING EQUIPMENT
P.O. Box 385, 3840 AJ Harderwijk

American Projection

Drawing number	Sheet	Revision
P242068A92	2	0

V US — PLC MOUNTED IN Jetty Head Console
V = VENDOR

XA — CLIENT ESD

YA — CLIENT DCS

X — INSTRUMENT PANEL MOUNTED

INSTRUMENT LOCAL MOUNTED

PUMP

XYV — Solenoid VALVE

Serial link

Hardwire link

Wireless link

Hydraulic link

QCDC : QUICK CONNECT DISCONNECT COUPLER

REFERENCE DOCUMENTS :
ELECTRICAL WIRING DIAGRAM P242068A91
FUNCTIONAL LOGIC DIAGRAM P242068A90

This document is confidential and the information contained herein is a confidential disclosure. It is shown on the understanding it is not to be revealed to others or used for any other purpose without the written consent of KANON LOADING EQUIPMENT B.V.

Rev. 3			
Rev. 2			
Rev. 1			
Check			Length -and angle tolerances acc. to ISO 2768-1, class C / Form -and place tolerances acc. to ISO 2768-2, class K / Roughness according to ISO 4287, Ra in µm / Units in mm
Drawn	01-10-2024	ZUL	
Scale: N.T.S.		A3	

KANON LOADING EQUIPMENT
P.O. Box 385, 3840 AJ Harderwijk NL

Legend sheet

For Marine Loading Arm

American Projection

Drawing number P242068A92 | Sheet 3 | Revision 0

T:\Inventor\Templates\standard A3.idw

HYDRAULIC POWER PACK

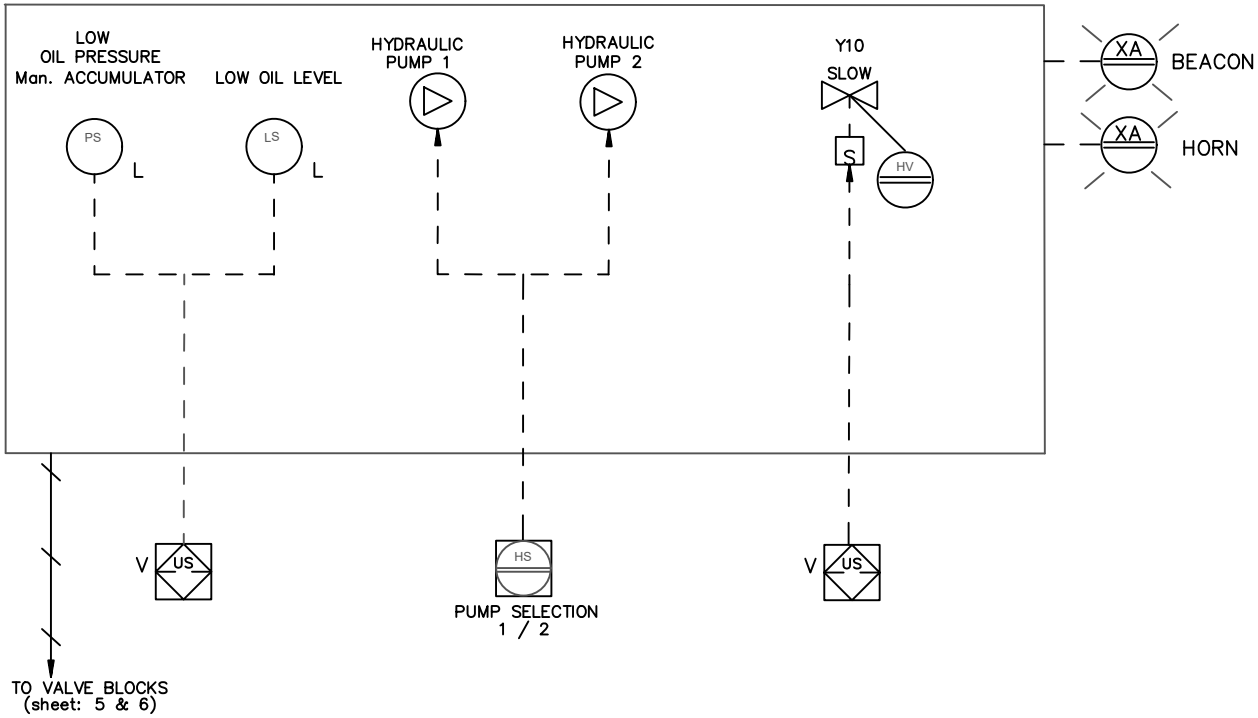

PENDANT connected to HPP

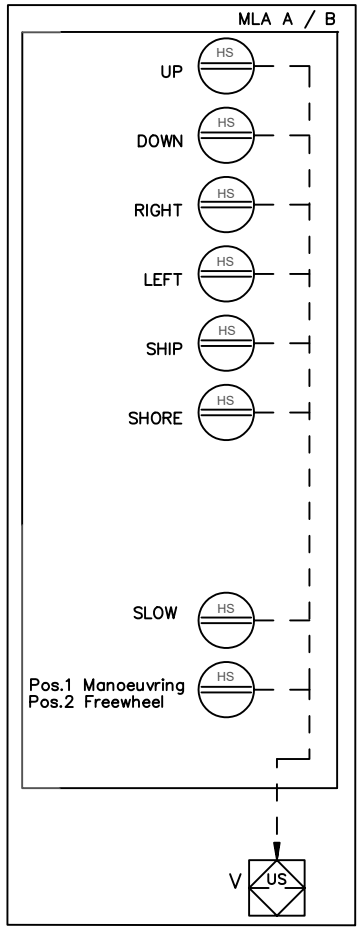

RADIO CONTROL

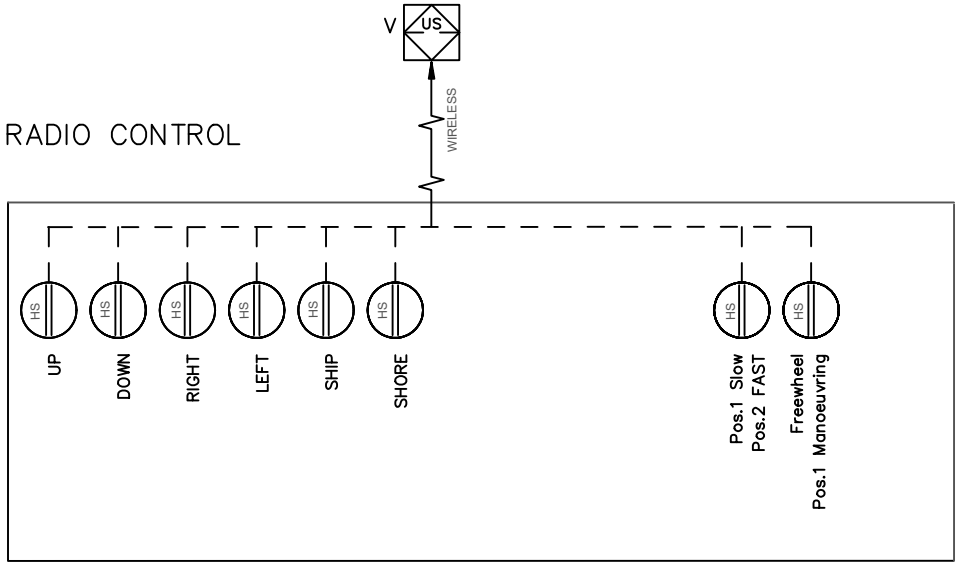

Rev. 3			
Rev. 2			
Rev. 1			
Check			Length -and angle tolerances acc. to ISO 2768-1, class C / Form -and place tolerances acc. to ISO 2768-2, class K / Roughness according to ISO 4287, Ra in µm / Units in mm
Drawn	01-10-2024	ZUL	
Scale: N.T.S.		A3	

KANON LOADING EQUIPMENT
P.O. Box 385, 3840 AJ Harderwijk NL

P&ID HPP

For Marine Loading Arm

American Projection

Drawing number P242068A92 | Sheet 4 | Revision 0

T:\Inventor\Templates\standard A3.idw

This document is confidential and the information contained herein is a confidential disclosure. It is shown on the understanding it is not to be revealed to others or used for any other purpose without the written consent of KANON LOADING EQUIPMENT B.V.

Pot free input contact from BP:

Pot free contacts per MLA:
Pot free contacts per MLA:
Pot free contacts per MLA:

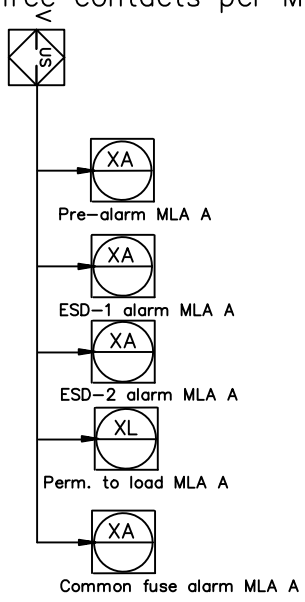

LOADING ARM 16" – 600#
MLA–A10 / MLA A

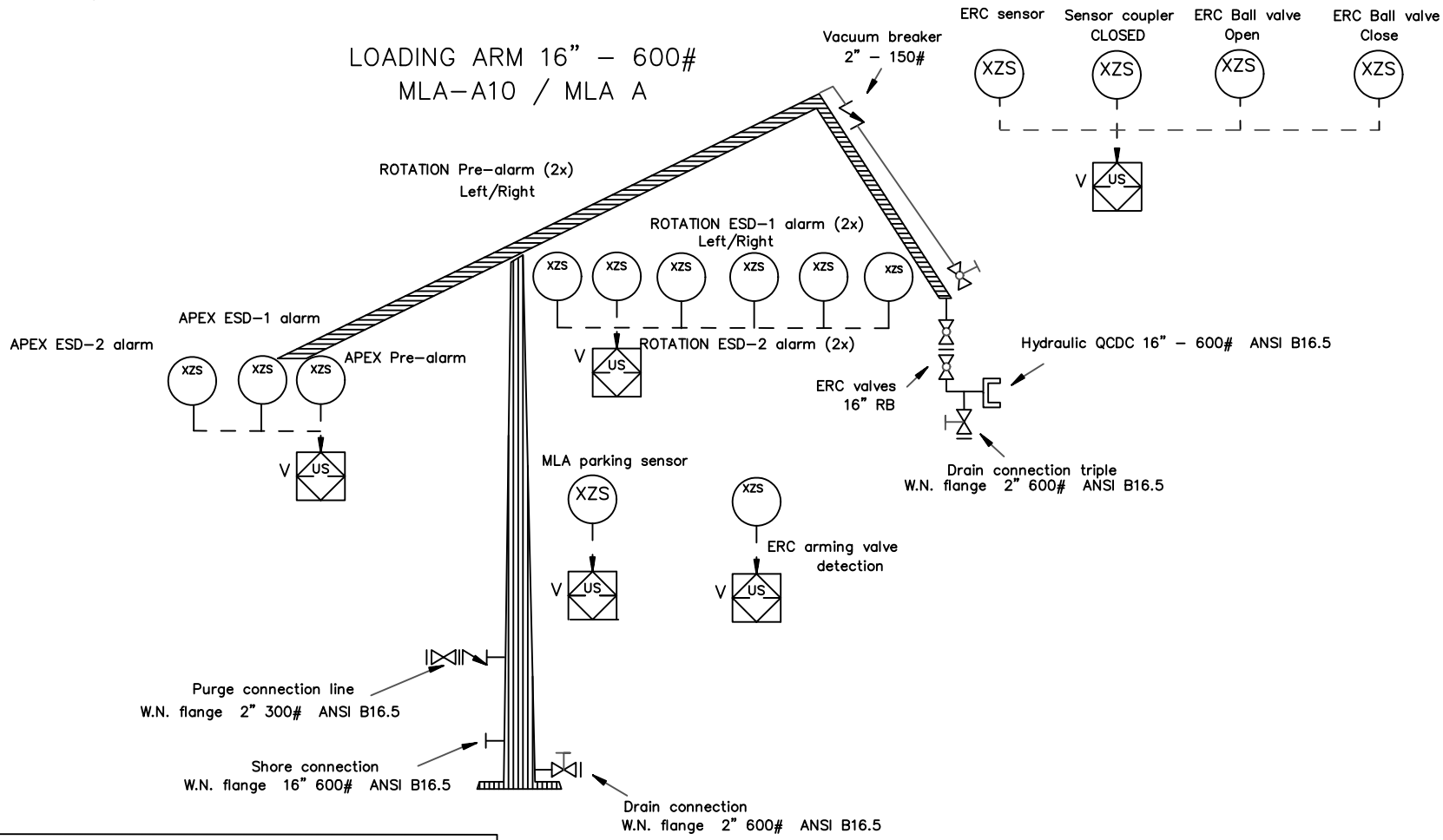

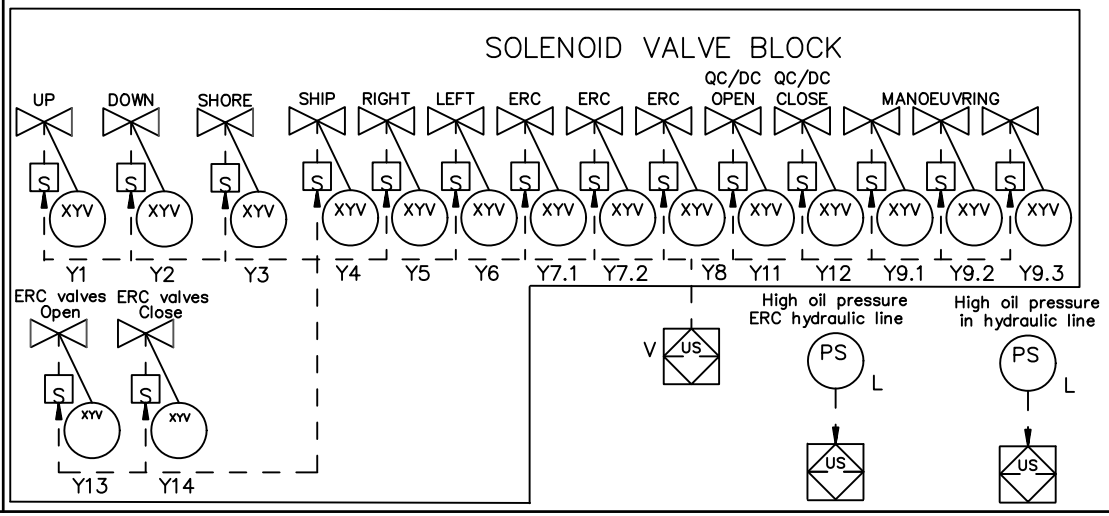

Rev. 3			
Rev. 2			
Rev. 1			
Check			
Drawn	01-10-2024	ZUL	
Scale: N.T.S.		A3	

Length -and angle tolerances acc. to ISO 2768-1, class C | Form -and place tolerances acc. to ISO 2768-2, class K | Roughness according to ISO 4287, Ra in µm | Units in mm

KANON LOADING EQUIPMENT
P.O. Box 385, 3841 AJ Harderwijk NL

P&ID MLA A

For Marine Loading Arm

American Projection

Drawing number P242068A92 | Sheet 5 | Revision 0

T:\Inventor\Templates\standard A3.idw

This document is confidential and the information contained herein is a confidential disclosure. It is shown on the understanding it is not to be revealed to others or used for any other purpose without the written consent of KANON LOADING EQUIPMENT B.V.

Pot free input contact from BP:

Pot free contacts per MLA:
Pot free contacts per MLA:
Pot free contacts per MLA:

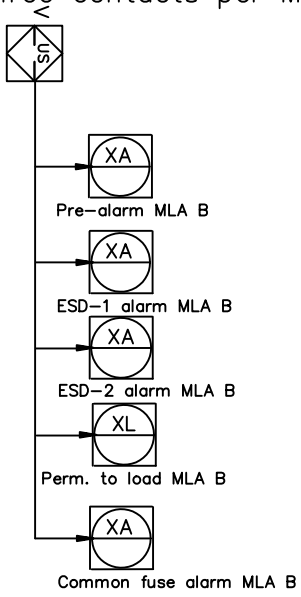

LOADING ARM 16" – 600#
MLA–B10 / MLA B

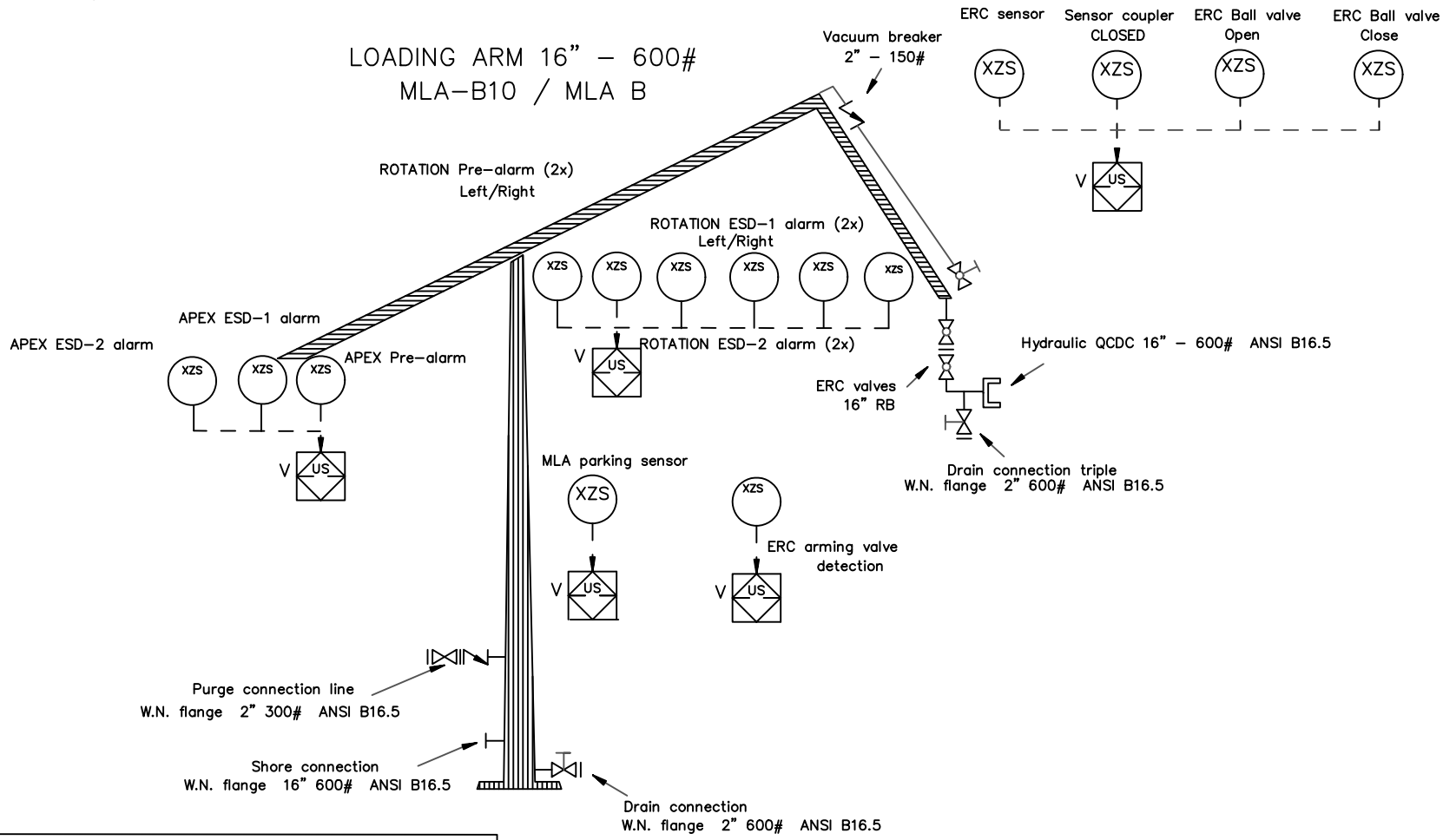

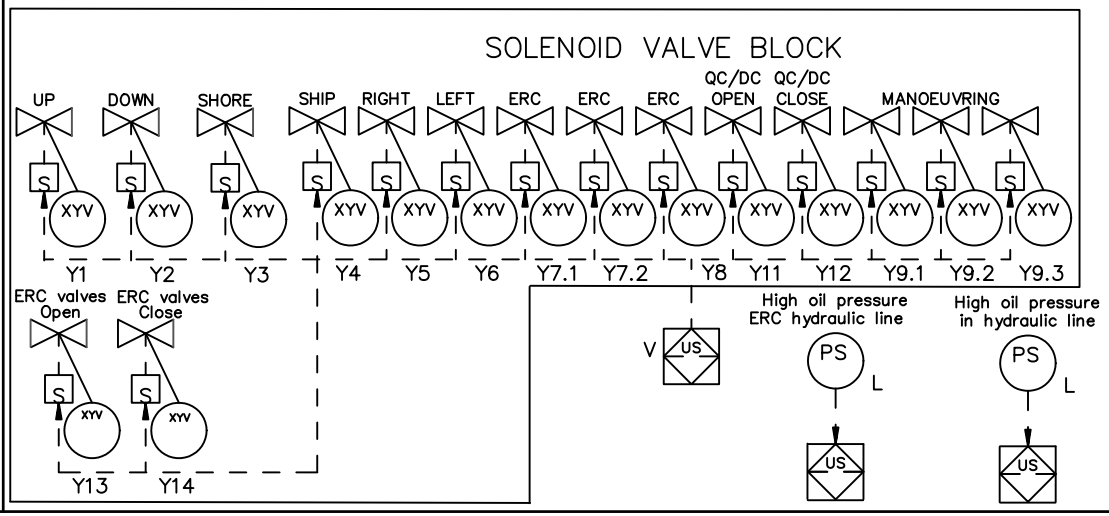

Rev. 3			
Rev. 2			
Rev. 1			
Check			
Drawn	01-10-2024	ZUL	
Scale: N.T.S.		A3	

Length -and angle tolerances acc. to ISO 2768-1, class C | Form -and place tolerances acc. to ISO 2768-2, class K | Roughness according to ISO 4287, Ra in µm | Units in mm

KANON LOADING EQUIPMENT
P.O. Box 385, 3841 AJ Harderwijk NL

P&ID MLA B

For Marine Loading Arm

American Projection

Drawing number P242068A92 | Sheet 6 | Revision 0

T:\Inventor\Templates\standard A3.idw

This document is confidential and the information contained herein is a confidential disclosure. It is shown on the understanding it is not to be revealed to others or used for any other purpose without the written consent of KANON LOADING EQUIPMENT B.V.

CAUSE AND EFFECT MATRIX

DESCRIPTION	Area	PID No.
CNG MLA		P242068A10

CAUSE / EFFECT

INPUT TYPE	NOTES	SERVICE DESCRIPTION	SENSING	TAG No.	TAG No.
					1
MS		Mainswitch 1 120V from UPS 1	Selector		2
MS			Selector		3
					4
MS	5,30	MLA-UP (local)	Pushbutton		5
MS	5,30	MLA-DOWN (local)	Pushbutton		6
MS	5,30	MLA-SHORE (local)	Pushbutton		7
MS	5,30	MLA-SHIP (local)	Pushbutton		8
MS	5,30	MLA-RIGHT (local)	Pushbutton		9
MS	5,30	MLA-LEFT (local)	Pushbutton		10
MS	5,30	MLA-COUPLER OPEN (local)	Pushbutton		11
MS	5,30	MLA-COUPLER CLOSED (local)	Pushbutton		12
MS	2,5,30	FAST/SLOW (local)	Slow		13
MS	3,5,7,9,10,11,30	MLA freewheel/manoeuvring mode selection (local)	freewheel		14
			manoeuvring		15
MS	1, 5,30		Local		16
MS		MLA-ERC valves OPEN (local)	Pushbutton		17
MS		MLA-ERC valves CLOSE (local)	Pushbutton		18
MS	6,14,31	MLA-UP (pendant)	Pushbutton		19
MS	6,14,31	MLA-DOWN (pendant)	Pushbutton		20
MS	6,14,31	MLA-SHORE (pendant)	Pushbutton		21
MS	6,14,31	MLA-SHIP (pendant)	Pushbutton		22
MS	6,14,31	MLA-RIGHT (pendant)	Pushbutton		23
MS	6,14,31	MLA-LEFT (pendant)	Pushbutton		24
MS	6,14,31	MLA-COUPLER OPEN (pendant)	Pushbutton		25
MS	6,14,31	MLA-COUPLER CLOSED (pendant)	Pushbutton		26
MS	2,6,14,31	FAST/SLOW (pendant)	Slow		27
MS	3,6,7, 9,10,11,14,31	MLA freewheel/manoeuvring mode selection (pendant)	freewheel		28
			manoeuvring		29
MS	1, 5,31	MLA control Local/radio/pendant (pendant)	Pendant		30
MS		MLA-ERC valves OPEN (pendant)	Pushbutton		31
MS		MLA-ERC valves CLOSE (pendant)	Pushbutton		32
					33
MS	33,34,35	MLA-UP (radio)	Pushbutton		34
MS	33,34,35	MLA-DOWN (radio)	Pushbutton		35
MS	33,34,35	MLA-SHORE (radio)	Pushbutton		36
MS	33,34,35	MLA-SHIP (radio)	Pushbutton		37
MS	33,34,35	MLA-RIGHT (radio)	Pushbutton		38
MS	33,34,35	MLA-LEFT (radio)	Pushbutton		39
MS	5,30	MLA-COUPLER OPEN (radio)	Pushbutton		40
MS	5,30	MLA-COUPLER CLOSED (radio)	Pushbutton		41
MS	33,34,35	FAST/SLOW (radio)	Slow		42
MS	3,33,7,9,10,11, 32,34,35,43	MLA freewheel/manoeuvring mode selection (radio)	freewheel		43
			manoeuvring		44
MS	1, 5,35	MLA control Local/radio/pendant (radio)	Radio		45
MS		MLA-ERC valves OPEN (radio)	Pushbutton		46
MS		MLA-ERC valves CLOSE (radio)	Pushbutton		47
	44	ERC ENABLED		Internal interlock	48
PR	10,11,14,36	ERC arming valve	DISARMED	Internal interlock	49
			ARMED		50
SW	13, 14,39	ERC clamp disconnected			51
KS		ERC working PIN			52
					53
		Solenoid activated	Active		54
					55
		Power on flag	Active	Internal interlock	56
	13, 23,45	ERC release activation	Trip	Internal interlock	57
		ESD-2 reset		Internal interlock	58
ES		common fuse alarm (ERS solenoids not healthy)	Alarm		59
PR	7,14	Parking lock	UNLOCK		60
			LOCK		61
PR	8,14	MLA connected to vessel	disconnected		62
			connected		63
		Sensors on MLA fault	active		64
		PLC + DC power fault	active		65
MS	42	JHC Power on switch	ON		66
			OFF		67
MS		Hydraulic pump selection	Pump A		68
			Pump B		69
MS	5,12	Test Override	Keyswitch		70
					71
SW		UPPER ERC valve status detection	OPEN		72
SW		UPPER ERC valve status detection	CLOSED 1	2oo3	73
SW		UPPER ERC valve status detection	CLOSED 2		74
SW		UPPER ERC valve status detection	CLOSED 3		75
					76
PT		Pressure in riserpipe	< 5 bar		77
					78
					79
					80
		Pressure relief valve 1 not activated	Y16-de-energized	internal	81
		Pressure relief valve 2 not activated	Y17-de-energized	internal	82
					83
		FEEDBACK: Solenoid Y13	CC = Energized		84
		FEEDBACK: Solenoid Y14	CC = Energized		85
SW		FEEDBACK: Solenoid Y7.1	CC = Energized		86
SW		FEEDBACK: Solenoid Y7.2	CC = Energized		87
SW		FEEDBACK: Solenoid Y8.1	CC = Energized		88
SW		FEEDBACK: Solenoid Y8.2	CC = Energized		89
SW		FEEDBACK: Solenoid Y15	CC = Energized		90
					91
					92
	14,24	Pre-alarm APEX	Alarm		93
	14,24	Pre-alarm left	Alarm		94
	14,24	Pre-alarm right	Alarm		95
PR	13,14,24	ERC-alarm APEX 1	Alarm		96
PR	13,14,25	ERC-alarm APEX 2	Alarm		97
PR	13,14,26	ERC-alarm ROTATION 1	Alarm		98
PR	13,14,26	ERC-alarm ROTATION 2	Alarm		99
MS	7,13	MANUAL ERC activation	Pushbutton		100
MS					101
PS	14,21	Low oil pressure ERC accumulator 1 in HPP	<160 bar		102
PS	14,21	Low oil pressure ERC accumulator 2 in HPP	<160 bar		103
PS	14	HPP Low oil level alarm	< 30 CM		104
MS	5	Alarm acknowledge	Pushbutton		105
MS	5,47	Reset ERC-alarm	Pushbutton		106
MS	5,26	Reset Pre-alarm	Pushbutton		107
MS	5,47	Power reset	Pushbutton		108
					109
MS	5	Lamp test	Pushbutton		110

Field Equipment

NOTES	SERVICE DESCRIPTION	TAG No.
13,18	Y1 - UP	6
18	Y2 - DOWN	7
18	Y3 - SHORE	8
18	Y4 - SHIP	9
18	Y5 - RIGHT	10
18	Y6 - LEFT	11
17, 18	Y7.1 - ERC SOLENOID	12
17, 18	Y7.2 - ERC SOLENOID	13
17, 18	Y8.1 - ERC SOLENOID	14
17, 18	Y8.2 - ERC SOLENOID	15
18	Y9.1/Y9.2/Y9.3 - MANOEUVRING MODE	16
2, 18	Y10 - SLOW/FAST	17
18, 38	Y11 - COUPLER OPEN	18
18	Y12 - COUPLER CLOSED	19
	Y13- ERC valves Opening	20
	Y14 - ERC valves Closing	21
44	Y16 - Pressure relief valve 1 OPEN	22
44	Y17 - Pressure relief valve 2 OPEN	23
18	Y15 - HPP ACCUMULATOR PACK	24
18,22,23	HYDRAULIC PUMP A START/STOP	25
18,22,23	HYDRAULIC PUMP B START/STOP	26

Local Control Panel

		TAG No.
9,10,11,18,37	Visual alarm	30
9,10,11,18	claxon sound intermittent	31
16	claxon Continnous	32
	JHC control system is available	33
18	low oil level alarm	34
18,21	Low oil pressure alarm	35
11,18,25	Arm in manoeuvring mode ERC armed indicator	36
		37
		38
14,18,25	- Arm in alarm indicator	39
7,14,18,25	- Manual ERC-alarm indicator	40
10, 18	free-wheel mode indicator	41
18	Manoeuvring mode indicator	42
18,36	ERC armed /ERC arming valve open indicator)	43
18,36	ERC disarmed (ERC arming valve close indicator)	44
		45
	Common fuse alarm	46
	ERC available	47
		48
		49
		50
		51
		52
8	MLA connect to vessel indicator	53
8	MLA disconnected from vessel indicator	54
7, 10	MLA in parking lock	55
	UPS powerfeed only	56

Output to DCS

		TAG No.
		57
18, 19	Pre-alarm	58
19	ERC-alarm	59
19,21	COMMON alarm	60
		61
		62
20		63
	Permission to load	64

Internal marker

7,24	ERC release activation	65
46	ERC alarm reset	66
	Solenoid	67
41	Solenoid activated	68
	Power-on	69
40	Power on Flag	70
	ERC ENABLED	71

LEGEND

MATRIX
- A = ACTIVATE
- O = OPEN
- C = CLOSE
- S = STOP
- G = START (GO)
- I = INHIBIT
- P = PERMISSIVE
- T = TIME DELAYED TRIP
- X = Selected
- F = INITIATED BY FAULT
- B = Bypass
- R = Reset
- OR = Open reset (reset at open contact)
- CR = Closed reset (reset at cosed contact)
- TA= Timer activation delay

INPUT TYPE
- AT = ANALOGUE INPUT
- ES = ELECTRICAL SWITCHGEAR INPUT
- MS = MANUAL SWITCH
- PS = PROCESS ACTUATED SWITCH
- SD = SHUTDOWN SYSTEM
- PR = PROXIMITY
- KS = KEYSWITCH

NOTES

1. CONTROL POINT SELECTOR SWITCH (LOCAL /PENDANT/RADIO) 10S15
2. Slow mode = 1 Fast mode=0
3. Freewheel mode = 0 Manoeuvring mode =1 (de-energized = freewheel mode)
4. Deleted
5. On local control panel
6. On local control pendant
7. "Manual ERC-alarm" only active if NOT in manoeuvring mode and NOT in parking lock (except for power reset)
8. MLA connect to vessel detection logic = 1
9. If manoeuvring mode selected and no solenoids activated for 5 min and freewheel mode not selected a manoeuvring alarm will be given (Alarm claxon and flash is also activated)
10.
11. If selected MLA in "ERC armed" and manoeuvring mode is active then alarm (horn & beacon) will activate after 1min
12. Bypasses Pre-alarm INHIBIT
13. If ERS TRIP & ERC sensor is closed (e.g. ERC is disconnected) then the MLA will raise for 20 seconds by activating Y1 solenoid
14. DIP settings of sensors are as follows:
    pre-alarm/1st / ERC-alarm sensors: Healthy at logic=1 - No metal detection. Alarm status at logic=0 - metal detection. Line fault input- logic=0
    ERC arming valve: ERC armed - NO metal detection - logic=1. ERC disarmed - Metal detection - logic=0. Line fault input- logic = 0
    ERC sensor: ERC connected - metal detection - logic=0. ERC disconnected - No metal detection - logic=1. Line fault input- logic=0
    Oil level + oil pressure transmitters: Healthy - logic=1-closed contact. Alarm status-logic=0-open contact. Line fault input-N/A
    Pendant control switches: unactualleted-logic=0-NO metal detection. Actuated-logic=1-metal detection. Line fault input -logic=0
    Parking lock sensor: NOT locked-logic=0-NO metal detection. LOCKED-logic=1-Metal detection. Line fault input-logic=0
    Coupler sensor: Coupler closed-logic=1-metal detection. Couple open-logic=0-No metal detection. Line fault input-logic=0
15. Deleted
16. Deleted
17. At ERC solenoid Y7.1 and Y7.2 shall be de-energized.. Solenoid Y8.1 & Y8.2 remain energized.
18. Output is deactivated when main power switch is off
19. Output is opened (logic=0) at alarm status.
20. Output is closed at permissive (logic = 1)
21. If low oil pressure (pressure < 160 bar) after 45s hydraulic pump running, alarm shall be initiated.
    And ERS armed flag reset and HPP trip. If with 45 sec. pressure raise above 160 bar HPP will trip after 10 sec.
22. Auto stop after 10s when no start signal (exept "low oil level" then stop imidiate)
23. ERS Trip starts pump for 120sec.
24. ERC TRIP activation if (2oo2 ESD-2 sensor 1&2) or (2oo2 of one ESD-2 sensor & ESD-1 sensor) of same direction (apex/rotation)
25. Flashing after alarm acknowledge
26. Pre-alarm can be reset if ESD-2 is reset only
27. Deleted
30. Handswitch enabled by selection "local"
31. Handswitch enabled by selection "Pendant"
32. At (power) shutdown of radio transmitter the input to PLC shall be freewheel mode
33. On radio transmitter
34. Handswitch enabled by selection "Radio" 10S15B
35. Enabled at "radio" control 10S15C selected and MLA " " selected (switch 171X1:21)
36. ERC arming valve sensor is closed e.g. logic=1 at "ERC armed"
    ERC arming valve sensor is open e.g. logic=0 at "ERC disarmed"
37. When the electrical motor windings reach a temperature above 150 degrees celcius an alarm will appear. Electrical motor will trip.
38. Coupler OPEN function is blocked if MLA is in parking lock and /or ERC armed valve is open (ERC armed)
39. Deleted
40. See paragraph 4.2 of document P242086FDS for more detail info.
41. Power on FLAG:
    Power on flag is means MLA can be used
    If the power on flag = 0 all solenoids are interlock at reset state
    The power on flag is set if:
    a. No stage alarm active (ESD-1/2 - rotation and apex)
    b. Manual ERC-alarm not active
    c. control power switch on
    d. RESET ERC-alarm
    e RESET Pre-alarm
    f Power reset given
    The "power on" flag is reseted when power is swiched off
    a. PLC went OFF
    b. control power swicth off
42. When power on given visual and audible alarm will be pulsed for testing purpose
43. The radio transmitter went into freewheel mode if:
    1). Freewheel mode on the activated radio is selected.
    OR
    2). The shutdown pushbutton on the side has been pressed;
    OR
    3). Connection between transmitter / receiver is lost (e.g. power failure, malfunction etc.)
44. Pressure relief valve will be opened when energized. Springreturn.
45. Upon ERC release activation ist the two ERC relief valves will be opened (Y16 & Y17) for 5 seconds prior closing ERC valves and disconnection.
46. See paragraph 4.5 of document P242086FDS for more detail reset information.
47. Push ERC alarm reset (1) + POWER RESET (3) at the same time to open the ERC valves.

ISSUE	DATE	BY	CHKD	APPRD	DESCRIPTION
3	20-6-2025	WvO	HST	MBU	
2	20-5-2025	WvO	HST	MBU	
1	11-3-2025	WvO	HST	MBU	as built
0	30-12-2024	WvO	HST	MBU	For information

WHEN REVISIONS HAVE BEEN MADE TO THIS DRAWING THE INDEX OF ISSUE SHALL BE INDICATED IN A TRIANGLE NEAR THE PART(S) CONCERNED.

CNG project

DRAWN BY: WvO	DATE: 30-12-2024	MLA
CHECKED BY:	SCALE:	
CHECKED BY:	SCALE:	
APPROVED BY:		

CAUSE AND EFFECT MATRIX

UNIT No.:	PAGE 1 OF 1	
LOCATION:	PLANT:	PROJECT No: P242068
		P242068CE

Rev	Date	Drawn	Checked	Description
-	18-10-2024	EST	MvdK	Initial release
1	21-10-2024	EST	MvdK	Client comments
2	20-12-2024	EST	MvdK	Pos 24 added

Pos.	Qty.	Type	Description	Manufacturer	Remark
01	1	E0137585	Manifold	Doedijns	
02	2	EQKM-103P	Manifold	Eurofluid	
03	6	QV-06/24	Flow control valve pressure compensated	Atos	
04	2	EQKM-103AB	Manifold	Eurofluid	
05	2	DHA-0711/M-110VAC	4/3 Directional spool valve solenoid operated	Atos	Atex
06	1	HQ-022	Throttle check valve	ATOS	
07	1	HR-012	Sandwich	ATOS	
08	1	DHA-0713/M-110VAC	4/3 Directional spool valve solenoid operated	Atos	Atex
09	1	HMP-012	Sandwich pressure relief valve	ATOS	
10	1	DHA-0713/1/M-110VAC	4/3 Directional spool valve solenoid operated	Atos	Atex
11	2	HQ-013	Throttle check valve	ATOS	
12	3	AEXd32061a-R115/L9 Z104	3/2 Directional poppet valve + position indicator	Wandfluh	Atex + SIL 2
13	2	AEXd32061a-R115/L9 Z104	3/2 Directional poppet valve + position indicator	Wandfluh	Atex + SIL 2
14	1	AEXd32060b-R115/L9 Z104	3/2 Directional poppet valve + position indicator	Wandfluh	Atex + SIL 2
15	2	SP-PLUG-H16F	Orifice	Hydropack	
16	1	T20/2	Plug	Robucon	
17	3	RKH-G1/2-13-4423	2 Way ball valve	Pister	
18	14	3184-13-04-DE 1/4	Test coupling	Hydroflex	
19	4	7110928B	Manifold	Hydropack	
20	3	DHA-0671/1/M/O-110VAC	4/2 Directional spool valve solenoid operated	Atos	Atex
21	1	3200863C	Mounting Frame	Hydropack	
22	1	HQ-023	Throttle check valve	ATOS	
23	1	HQ-024	Throttle check valve	ATOS	
24	2	ADP6/30	Distance Plate	Wandfluh	

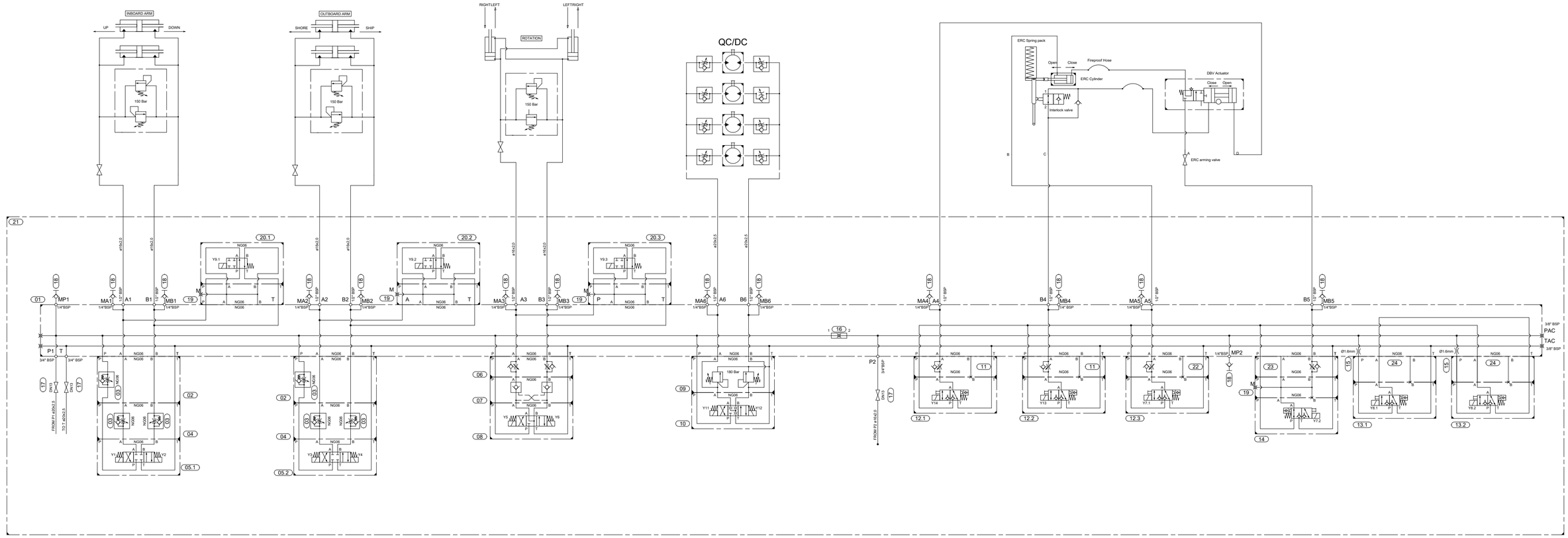

Description:	HYDRAULIC DIAGRAM VALVE BLOCK			Drawn by : EST	KANON LOADING EQUIPMENT
				Checked by : MvdK	
File Name :	P242068A95		Project N. Customer : 171988	Date : 20-12-2024	KANON. B.V.
A2		2	DOC. CODE : 2-15	Date : 18-10-2024	P.O. BOX 385 3840 AJ HARDERWIJK(NL)

Rev	Date	Drawn	Checked	Description
-	18-10-2024	EST	MvdK	Initial release
1	21-10-2024	EST	MvdK	P0 pos 37 changed 90 bar --> 135 bar
2	7-11-2024	EST	MvdK	Pos 36 manual override removed / Pos 35 NC --> NO

Pos.	Qty.	Type	Description	Manufacturer	Remark
01	1	3201218	Mounting Frame	Hydropack	
02	1	2120758	Tank	Hydropack	120L
03	1	2120763	Tank cover	Hydropack	
04	1	7110615	Manifold	Hydropack	Rev. G
05	3	CAE30	Check valve	Flucom	
06	1	DHA-0671/1/M-110VAC	4/2 Directional spool valve solenoid operated	Atos	Atex
07	1	QV-06/6	Flow control valve pressure compensated	Atos	
08	1	CART M5	Pressure relief valve	ATOS	
09	1	FPRI 1/4	Check valve	Fluid-Press	
10	1	FHB-0652 BAF1 A10N	Pressure filter	Mp-Filtri	
11	1	DVA50H P01	Clogging indicator	Mp Filtri	
12	2	3184-13-04-DE 1/4	Test coupling	Hydroflex	
13	1	FT290-14	Needle valve	Tognella	
14	5	MAN-63/315-B/1,6	Pressure gauge	Hydropack	
15	1	PAM141202	Hand pump	Contarini	
16	2	PVPC-C-3029/1D 12	Self-regulating pump	Atos	
17	2	B5A04E8135001B01	Electric motor	Cemp	
18	2	SB-2 MAX 250BAR	Safety block	FOX	
19	1	FRI 040 B A G1 A25N	Element with return filter	Mp Filtri	
20	2	FT267/2-14	Throttle valve	F.lli Tognella	
21	1	DVA20H P01	Clogging indicator	Mp Filtri	
22	2	FT267/2-14-MP	Throttle valve	F.lli Tognella	
23	1	LVA-20-T-A-P-M12-S01	Level gauge	Mpfiltri	
24	2	7110057F	Manifold	Hydropack	
25	1	D101	Breather	Air Sentry	
26	2	MF-7110256A	Manifold	Hydropack	
27	1	LEN A 250 1 A 1 A F S P01	Level switch	Mp Filtri	
28	2	MAP-320	Pressure switch	ATOS	
29	1	090-12	2 Way ball valve	Itap	
30	3	FT 257/6-12	Check valve	Tognella	
31	1	P-RVZ-16-SR-WD-3.0 Bar WAL374038	Check valve	Walterscheid	
32	2	FT291-14	Needle valve	Tognella	
33	1	E-35 ES	Breather	R+L Hydraulics	
34	1	ES3D12L	Connection plate	Eurofluid	
35	1	AEXd22060b-R115 / L9 Z104	2/2 Directional poppet valve + Position indicator	Wandfluh	Atex + SIL 2
37	2	AS 10 P360CA7V-8-C0C0	Accumulator	EPOLL	
39	2	CSH MS1000 SS	Test hose	Hydropack	
40	1	2SC-P DN12 L=440mm	Hose		
41	1	2ST-NW12-16/16-90-L=580	Hose		

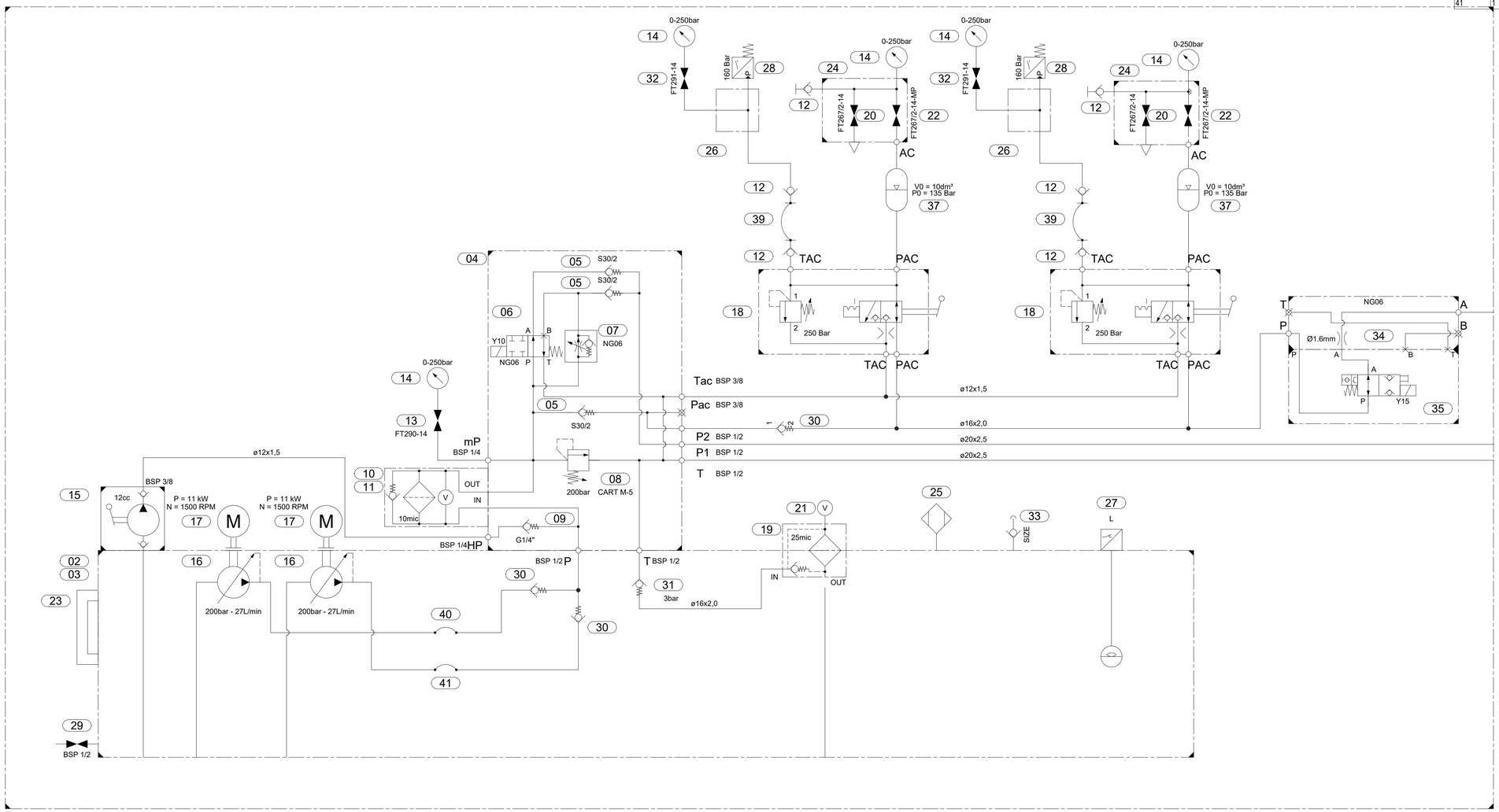

Description:	HYDRAULIC DIAGRAM POWERPACK			Drawn by : EST	KANON LOADING EQUIPMENT
File Name: P242068A96		Project N. Customer : 171988		Checked by : MvdK	KANON. B.V.
A1	2	DOC. CODE : 1-07		Date : 8-11-2024	P.O. BOX 385 3840 AJ HARDERWIJK(NL)
				Date : 18-10-2024	

Rev	Date	Description	Rev By	Checked By
-	18-10-2024	INITIAL RELEASE	E. Straver	M. van der Kroft

Section : A - A

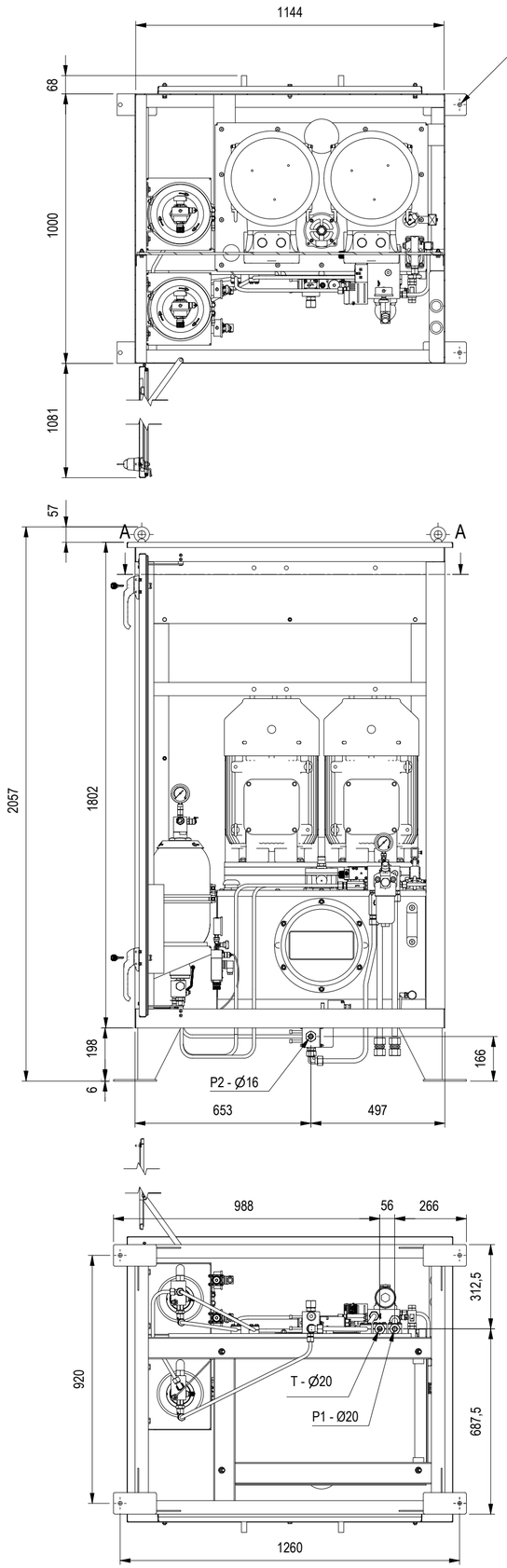

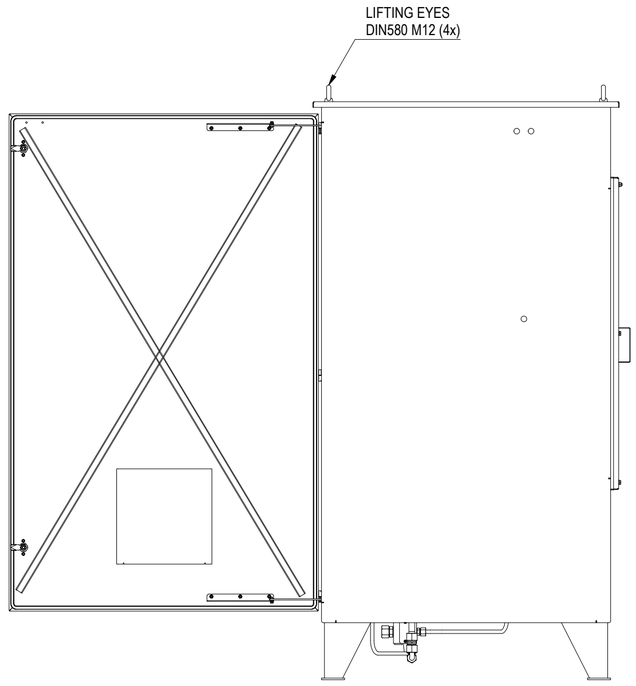

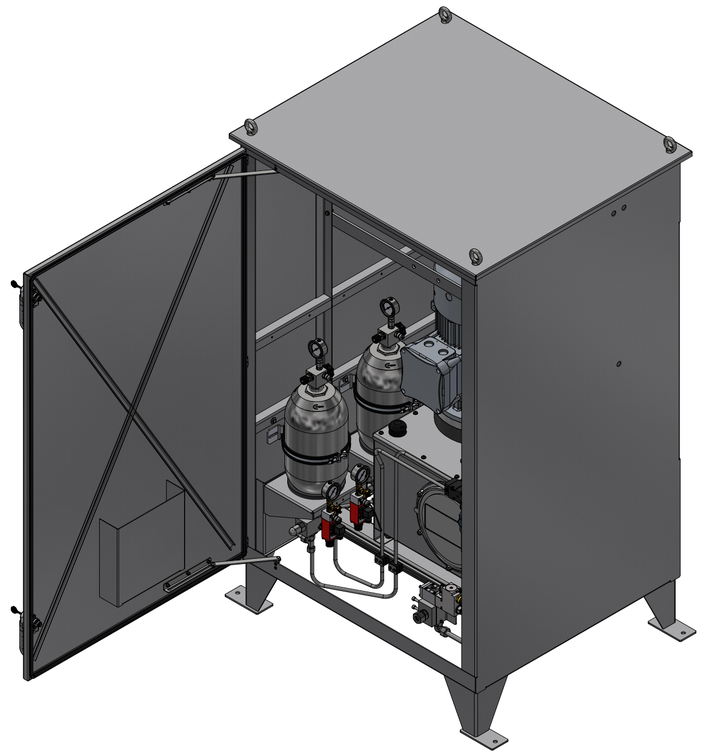

Hydraulic diagram & Partlist : P242068A96

KANON LOADING EQUIPMENT Kanon B.V. P.O. Box 385 3840 AJ Harderwijk The Netherlands	Linear and angular tolerances acc. to NEN-EN-ISO 2768-1 class C	Weight : 1428 kg	Designed by	E. Straver
	Dimensions in mm Ra in µm	Material :	Designed date	18-10-2024
		Doedijns project No. :	Checked by	M. vd Kroft
			Checked date	18-10-2024
This copyright of the drawing is the property of Kanon B.V. Harderwijk - Holland and must not as a whole or in a part be copied, reproduced or shown to any other parties without company's written permission.			Design state	Work in Progress

Document title : GA DRAWING HYDRAULIC POWERPACK

Format	Projection	Scale	Part number	Drawing number	Revision	Sheet
A2		1 / 15	9534627	P242068A97	-	1 / 1

Rev	Date	Description	Rev By	Checked By
-	18-10-2024	INITIAL RELEASE	E. Straver	M. van der Kroft
1	25-10-2024	SEVERAL DIMENSIONS ADDED	E. Straver	M. van der Kroft

Section : A - A

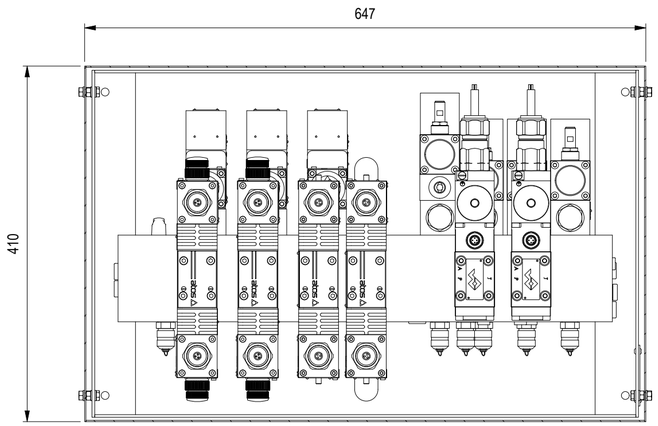

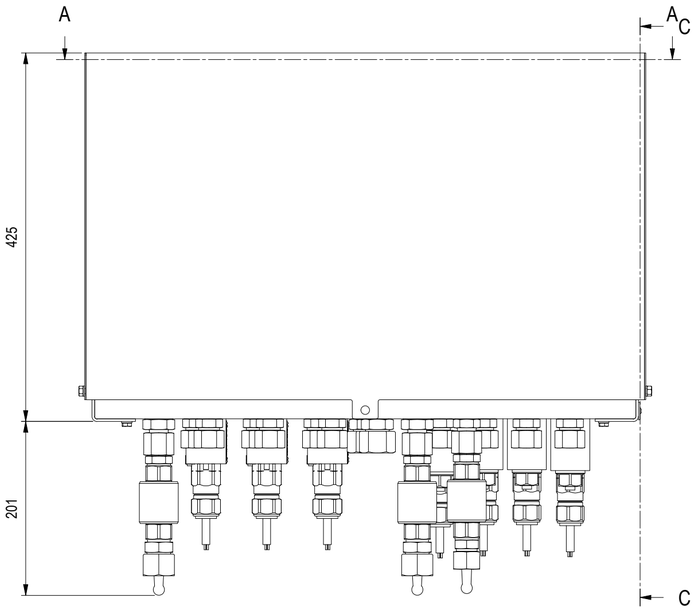

Section : C - C

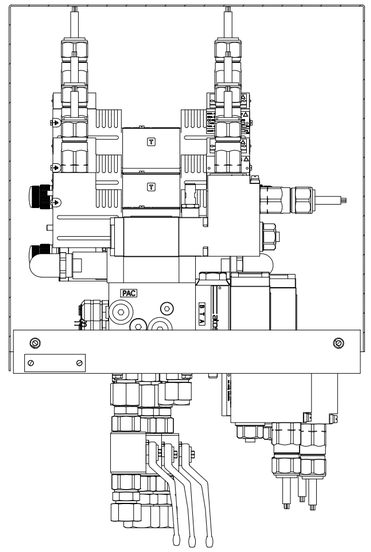

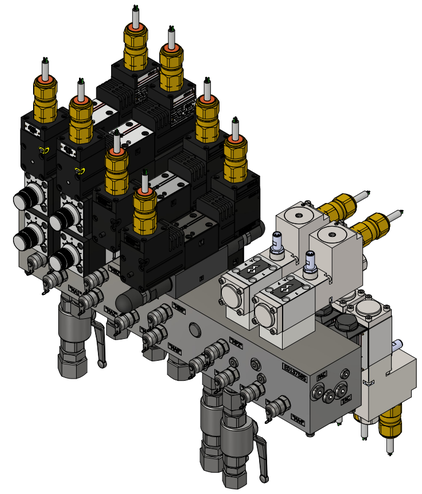

Isometric view without frame / cabinet (1 : 6)

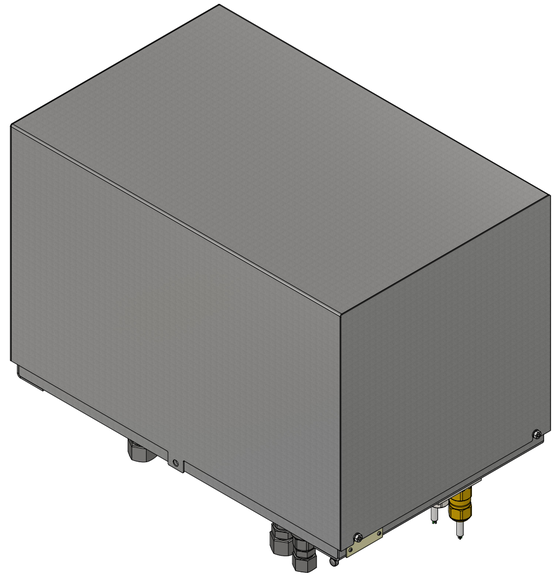

Isometric view with frame / cabinet (1 : 6)

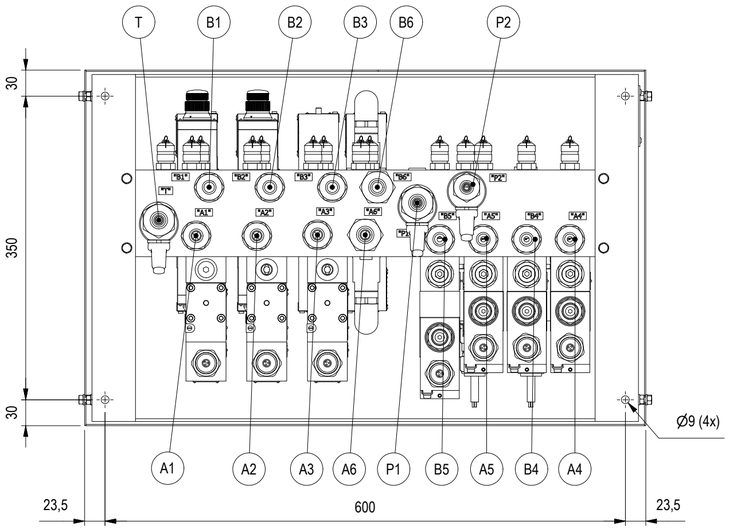

Hydraulic diagram & Partlist : P242068A95

Connections : P1-T-A6-B6 - Ø20x2,5
Connections : A1-B1-A2-B2-A3-B3-A4-B4-A5-B5 - Ø16x2
Connections : P2 - Ø16x2

KANON LOADING EQUIPMENT

Kanon B.V.
P.O. Box 385
3840 AJ Harderwijk
The Netherlands

Linear and angular tolerances acc. to NEN-EN-ISO 2768-1 class C
Dimensions in mm
Ra in µm

Weight : 131 kg
Material :
Doedijns project No. :

Designed by: E. Straver
Designed date: 18-10-2024
Checked by: M. vd Kroft
Checked date: 18-10-2024
Design state: Work in Progress

This copyright of the drawing is the property of Kanon B.V. Harderwijk - Holland and must not as a whole or in a part be copied, reproduced or shown to any other parties without company's written permission.

Document title : GA DRAWING HYDRAULIC VALVE BLOCK

Format	Projection	Scale	Part number	Drawing number	Revision	Sheet
A2		1 : 5	9534626	P242068A98	1	1 / 1

FUNCTIONAL DESIGN SPECIFICATION OF CONTROL SYSTEM P242068A91

Applicable for loading arms:

Identnr.	Tag number
P242068A10	
P242068B10	

List of related documents

Wiring document	P242068A91
Cause & effect	P242067CE
Operational flowchart	P242068PFC
P&ID	P242067A92
Hydraulic Power Pack (HPP) Drawing & Diagram	P242068A96 + A97
Hydraulic Valve Block Drawing & Diagram	P242068A95 + A98

List of abbreviations

HPP	Hydraulic power pack
LOP	Local Operating Panel
ERC	Emergency Release Coupler
HQCDC	Hydraulic Quick Connect Disconnect Coupler
MLA	Marine Loading Arm
APEX	Highest point of the MLA
TOS	Test Override Switch
ERSV	Emergency release System Valve
NO relay	Normally Open relay
PLC	Programmable logic Controller
PTL	Permission To Load
ERC	Safety Integraty System
UPS	Utility Power Supply
SIF	Safety Integraty Function
PFC	Process Flow Chart

1. Start-up control system

The control system can only be started up if there are no (operating envelope) alarms active. Due to this, during the start-up, the operating envelope alarm sensors (proximity switches) on the MLA are automatically checked.

The start-up procedure is as follows:
1). Select POWER ON;
2). RESET ERC-alarm (pushbutton “1”);
3). RESET Pre-alarm(pushbutton “2”);
4). RESET POWER (pushbutton “3”).

Only by pressing the buttons in this sequence and in case there are no alarms (closed contacts) the control system will start-up. Indicator “POWER ON” will light on. The control panel is then available for use.

The alarm beacon will switch off, after resetting the alarms, automatically. The horn must be switched off by pressing the alarm acknowledge button.

1.1 MLA in Pre-alarmduring start-up procedure:

Indicator “ARM IN ALARM” is flashing and the “POWER ON” indicator remains switched off.
One of the concerned alarmsensors:
PRE-ALARM APEX
PRE-ALARM LEFT
PRE-ALARM RIGHT
Will provide an alarm input (open contact) to the control system. The control console is blocked and therefore the MLA can’t be manoeuvred.

1.2 MLA in ERC-alarm during start-up procedure:

Indicator “ARM IN ALARM” is lit continuous and the “POWER ON” indicator remains switched off.
One of the concerned alarmsensors:
ERC-alarm APEX
ERC-alarm APEX REDUNDANT
ERC-alarm SLEWING
ERC-alarm SLEWING REDUNDANT

Will provide an alarminput (open contact) to the control system. The control console is blocked and therefore the MLA can’t be manoeuvred.

1.3 MLA in manual ERC-alarm during start-up procedure:

Indicator “MANUAL ERC-alarm ” is lit continuous and the “POWER ON” indicator remains switched off. The control console is blocked and therefore the MLA can’t be manoeuvred.

2. OPERATION MLA

The MLA can be controlled from the local operating panel OR wireless radio control OR hardwired pendant.

The MLA can be operated from a single operating point (local, wireless radio or pendant) only.

There is a selector switch for local/radio/pendant control located on the local control panel. The following MLA movements are possible:

Manoeuvring function	Kanon solenoid tag#
UP	Y1
DOWN	Y2
SHORE	Y3
SHIP	Y4
RIGHT	Y5
LEFT	Y6
COUPLER OPEN	Y11
COUPLER CLOSE	Y12

In addition: it is possible to select freewheel or manoeuvring mode from the local/radio/pendant control.

NOTE: when not using the wireless radio for more than 10 minutes, the wireless radio shall be shut down automatically. The control system remain in it latest selected mode.
At low battery the transmitter provides a warning signal. At empty battery the transmitter will shut down and the control system switch to freewheel mode.

2.1 Coupler control

The coupler (HQCDC) for connecting the MLA onto the vessel can be controlled from the operating panel, wired pendant and wireless radio.
To prevend opening the coupler by mistake it is only possible to open the coupler if:
1). Manoeuvring mode has been selected;
2). MLA not in hydraulic parking lock;
3). ERC arming valve in disarmed position.
4). Pressure inside riser pipe <5 bar ~ 4,5 mA (Calibration PT: 0-160 bar ~ 4-20 mA).
5). ERC valves closed.

The hydraulic coupler is a helping tool to place the bolts between the connection flanges of the MLA and the vessel only. After bolting the coupler will be opened to make space for the remaining bolts. So coupler will give OPEN status while connected onto vessel.

Therefore the coupler is not equipped with an OPEN/ CLOSE detection but a detection for the vessel manifold for "*MLA connected to vessel*" has been installed instead.

2.2 Freewheel mode

In freewheel mode the MLA is in floating mode, which means that the MLA can follow the ship during (un) loading procedure.
The manoeuvring functions, including Coupler control (solenoid Y1 thru Y12) are blocked in this mode.
The indicator “freewheel mode” is lit on the control panel.

The MLA will switch to freewheel automatically when the ERC arming valve is in “ ERC ARMED” status AND MLA is connected to vessel manifold AND MLA NOT in parking lock OR MLA in parking lock + ERC disarmed+ MLA is connected to vessel manifold.

The status of the ERC and manoeuvring solenoids in freewheel mode are as follows:

Solenoid	Energized / de-energized	Solenoid tag#
Manoeuvring solenoid	De-energized	Y9.1
Manoeuvring solenoid	De-energized	Y9.2
Manoeuvring solenoid	De-energized	Y9.3

WARNING: Because the MLA is in balance when the ERC has been released only, it means that at manipulating the MLA while ERC is connected the MLA may NEVER been switched to freewheel mode. If so the MLA moves downwards very quickly.

To switch into freewheel mode for a short time both LOP and radio transmitter are equipped with a FREEWHEEL pushbutton . While pressed the MLA will switch into freewheel whether the status of ERC arming is.

2.3 Manoeuvring mode

In manoeuvring mode the solenoids on the MLA’s valve block are energized and therefore not able to follow the vessel during (un)loading.
In this mode the MLA can be moved by using the manoeuvring functions.
The indicator “manoeuvring mode” on the control panel will light.

The status of the ERC and manoeuvring solenoids in manoeuvring mode are as follows:

Solenoid	Energized / de-energized	Solenoid tag#
Manoeuvring solenoid	Energized	Y9.1
Manoeuvring solenoid	Energized	Y9.2
Manoeuvring solenoid	Energized	Y9.3

Manoeuvring mode will be activated at all time, except when the freehweel interlocks has been fullfilled (see paragraph 2.2)

2.4 Lamp test

While pressing the “LAMP TEST” button on the control panel all indicators should lit.

2.5 Parking lock

In addition to the manual storm locks, the MLA can be hydraulicly locked with valves in hydraulic lines between the valve block and the hydraulic cylinders. The hydraulic lock is detected with a proximity switch. If the MLA is in parking lock the coupler OPEN function is blocked. An indication on the LOP is foreseen.

2.6 ERC arming valve

Within the hydraulic tubing between the ERC solenoids and ERC cylinder, for closing the ERC ball valves, a manual operated isolator with open/close detection has been placed. The so-called “ERC arming valve”.

If the ERC arming valve is opened:
1) Input contact to PLC is closed;
2) “ERC armed” indicator on the LOP will light.
3). All manoeuvring functions are blocked.
~~4). Coupler OPEN is blocked.~~
5). MLA into freewheel mode (when coupler is closed as well).

If the ERC arming valve is closed:
1). Input contact to PLC is opened;
2). “ERC disarmed” indicator on the local panel will lit on.
3). ERC function out of order. (ERC DISABLED)

2.7 ERC clamp detection

This sensor will detect if the ERC release is executed or not. If the ERC is disconnected, the inputcontact of the ERC sensor is closed and MLA remains in manoeuvring mode.

2.8 ERC valve control

The ERC valves can be opened and control from the LOP, radio and wired pendant.

Opening of the ERC valves can be done if: NO pre-alarm + ERC clamp connected + MLA connected to vessel + pressure inside riserpipe < 5 bar ONLY.

Solenoid	Energized / de-energized	Solenoid tag#	Remark
ERC valves opening	Energized	Y13 + Y7.1+Y7.2 + Y8.1 + Y8.2	**At activation**: Solenoid Y7.1+Y7.2 will be energized 0,5 sec before Y8.1 + Y8.2 & Y13 **At de-activation**: Solenoid Y8.1+Y8.2 & Y13 will be de-energized 0,5 sec before Y7.1 + Y7.2
ERC valves closing	Energized	Y14 + Y7.1+Y7.2 + Y8.1 + Y8.2	**At activation**: Solenoid Y7.1+Y7.2 will be energized 0,5 sec before Y8.1 + Y8.2 & Y14 **At de-activation**: Solenoid Y8.1+Y8.2 & Y14 will be de-energized 0,5 sec before Y7.1 + Y7.2

3. CONTROL OF HYDRAULIC POWER PACK (HPP)

The HPP will be controlled as follows.
If a manoeuvring function of the MLA is requested by means of pressing one of the pushbuttons, the selected hydrualic pump will be activated (indictator HPP running on LOP will lit). After using one of the manoeuvring functions the HPP will trip after 10 sec. If within these 10 seconds another the manoeuvring function is activated the HPP will not trip. It will trip after 10 seconds of not using a manoeuvring function only.
This will result in noise reduction on site and extended life time of both el. Motor and hydr. Pump and hydraulic oil. No heating up of the oil and therefore no " High oil temperature" alarm required.

3.1 Low oil level alarm

The oil tank of the HPP is equipped with a low oil level tuning Fork which detects the oil level within the oil tank. On a specific level to prevent dry run of the oilpumps. When the switch contact is opened a "low oil level alarm" will be initiated.
The following actions will be executed by the Kanon PLC at once:
1). Horn (intermittent) & alarm beacon activated;
2). Both hydraulic pumps of the HPP are blocked;
3). Indicator "*low oil level alarm*" on LOP will lit;
4). Potential free contact (NO relay) "common alarm" will be opened.
NOTE: the horn must be de-activated by pressing button "alarm acknowledge".

Action: Switch OFF both maintenance switches of el. Motor and fill up the oil level within il tank. Switch ON both maintenance switches of el. Motor and HPP is available again.

3.2 Low oil pressure alarm

Within the hydraulic valve block at the base of the riser an accumulator has been placed for safe guarding the ERC functionality during power failure.
Additionally an accumulator has been installed inside the HPU to retract the MLA after ERC release in case of power failure.

If the pressure inside one of the accumulators will be lower than 160 bar the low pressure switch provide a low pressure signal toward the Kanon PLC..
The following actions will be executed by the Kanon PLC at once:
1). The selected hydraulic pump will be activated;
A). The accumulator is pressurized within 45 seconds.
2). The "low oil pressure switch" detects normal pressure;
3). The hydraulic pump will trip 10 seconds after closing of the switch.
B). The accumulator will not be pressurized within 45 seconds.
2). The "low oil pressure switch" still provides a low pressure indication;
3). Both hydraulic pumps will be blocked (except at ERC-alarm);
4). Horn (intermittent) & beacon will be activated;
5). Indicator "*low oil pressure alarm*" on local panel will lit.
6). Potential free contact (NO relay) "common alarm" will be opened.
NOTE: the horn must be de-activated by pressing button "alarm acknowledge".

4. MLA ENVELOPE MONITORING

The envelope monitoring of the MLA is equipped with a 2-stage alarm called pre-alarm and ERC-alarm.

4.1 Pre-alarm

The MLA is moving out of its normal operating envelope. The Pre- alarm will be initated by one of the following proximity switches on the MLA:

Alarm sensors on MLA	Status at alarm
Pre-alarm APEX	OPEN (logic=0)
Pre-alarm RIGHT	OPEN (logic=0)
Pre-alarm LEFT	OPEN (logic=0)

NOTE: These sensors are part of the 2oo3 philopshy to initate ERC-alarm by safety system.

If one of these Pre-alarm sensors are activated the following actions will be executed by Kanon PLC at once:
1). Horn (intermittent) & alarm beacon activated;
2). Potential free contact (NO relay) “Pre-alarm” will be opened;
3). RED indicator “*arm in alarm*” on local panel will lit.
4). ERC valves will be closed.
5). At activation of a dedicated Pre-alarm sensor the concerning movement will be blocked. This prevents the operator from moving the MLA into the Pre- alarm area. See below table for the blockades:

Activated alarm sensor on MLA	Blocked manoeuvring function	Kanon tag#
Pre-alarm APEX	DOWN solenoid	Y2
	SHIP solenoid	Y4
Pre-alarm RIGHT	RIGHT solenoid	Y5
Pre-alarm LEFT	LEFT solenoid	Y6

For maintenance and testing purposes the manoeuvring blockades can be overruled by using the key-switch “TOS (Test Override Switch) on the local panel.
The horn must be shutdown by pressing the ALARM ACKOWNLEDGE button.

RESET Pre-alarm (pushbutton “2”)
It is only possible to reset the Pre-alarm if the MLA is back in its normal operating envelope again (e.g. the Pre-alarm sensors aren’t activated anymore).
Just after the reset of Pre-alarm the following happens:
1) RED indicator “*Arm in alarm*” on the local panel will switch off.
2) The red alarm beacon will switch off;
3) Potential free contact (NO relay) “Pre-alarm” will be closed;
4) The control system is no longer in Pre-alarm.

4.2 ERC-alarm

If the MLA from the Pre-alarm area moves further out of its working envelope one of the ERC-alarm sensors will be activated. The ERC-alarm will be initiated if one of the following proximity switches (in combination with a Pre-alarm sensor) OR both ERC-alarm sensors are activated or via a pushbutton:

Alarm sensor on MLA arm	Status at alarm
ERC-alarm APEX	OPEN (logic=0)
ERC-alarm APEX REDUNDANT	OPEN (logic=0)
ERC-alarm SLEWING	OPEN (logic=0)
ERC-alarm SLEWING REDUNDANT	OPEN (logic=0)
Manual ERC-alarm pushbutton on LOP	OPEN (logic=0)

The ERC-alarm will be initiated in combination with an Pre-alarm OR if both ERC-alarm sensors are activated. Except the “manual ERC-alarm” pushbutton on the local panel.
Because the ERC function should be available when the MLA is connected to vessel only we have two “ modes” of this function. The so-called “ ERC ENABLED” and “ ERC DISABLED” modes.
At ERC ENABLED the ERC function is available and can be released upon ERC-alarm .

ERC ENABLED pulse within Kanon PLC will only be provided if the following interlock signals will be set:
1). No Pre-alarmsensors activated;
2). No ERC-alarm sensors activated;
4). No manual ERC-alarm activated;
5). No common fuse alarm active;
6). MLA not in hydraulic parking lock;
7). MLA connected to vessel manifold;
8). ERC clamp not released;
9). No low oil pressure alarm;
10). ERC Arming valve in armed position.
11). ERC valves opened (1 sensor input).
12). Pressure relief valves ERC (de-energized) (2 pcs).
13). ERC working PIN placed.
14). Feedback signals solenoids OK;
15). 24V power supply OK;

All these ERC ENABLED interlock signals will be detected by the Kanon PLC. At fullfill this interlock signals (last step will be ERC arming valve open), the safety part of the Kanon PLC will activate ERC enabled status.

ERC solenoids	ERC function DISABLED	ERC function ENABLED	ERC-alarm (ERC release)
Solenoid Y7.1	De-energized	Energized	De-energized
Solenoid Y7.2	De-energized	Energized	De-energized
Solenoid Y8.1 & Y8.2	De-energized	Energized	Energized
Solenoid Y13	De-energized	De-energized	De-energized
Solenoid Y14	De-energized	De-energized	Energized
Solenoid Y15	De-energized	De-energized	De-energized

The indicator " ERC available" on LOP light ON green / MLA

The ERC ENABLED status will set by the Kanon PLC / ERC. Once reached the ERC ENABLED status it can only be set back to ERC DISABLED when:
1). ERC arming valve will be closed (hydr line toward ERC cylinder will be blocked).
2). Common fuse alarm on ERC solenoids.
3). Feedback signal solenoids Y7.1 OR Y7.2 not-healthy at NO ESD2 alarm.
4). Feedback signal solenoids Y8.1 AND Y8.2 not-healthy.
5). Feedback signal solenoids Y14 not-healthy.
6). ERC working PIN removed.

4.3 Actions at ERC-alarm

At ESD-2 an automatic disconnection from vessel will be executed. Before disconnection the pressure between the two ERC valves must be released. To realise this the following steps will be performed by the Kanon control system:

Step	Action	Actuator	Status	tag#	Remarks
1	Hornsound & beacon	Horn & alarmbeacon	Energized		
2	Potential free contact ERC-alarm		opened		
3	Indicator on LOP "ARM IN ALARM" lit		Energized		
4	HPP will start running for 2 minutes	HPP P242068A96 (selected pump)	Activated		
5	MLA will switch to manoeuvring mode	Solenoids Y9.1 / Y9.2 & Y9.3	Activated		
6	Solenoid to make ERC accu available	Solenoid Y15	De-energized		
7	ERC valves will be closed	Solenoids Y14	Energized		For 60 sec
		Solenoid Y13	De-energized		
8	ERC valves closed detected	3 pcs Prox. Switches	Closed	11S8.1, 11S8.2, 11S8.3	2oo3
9	ERC relief valves open	MOV 24VDC	Energized	Y16 + Y17	For 20 sec
10	5 seconds timer	Kanon PLC	Activated		
11	ERC release	ERC Solenoids Y7.1 / Y7.2	De-energized	Y7.1 + Y7.2	Y8.1 + Y8.2 remained energized
12	ERC clamp released detected	Prox. Switch	Activated	11S7.1	
13	UP-movement for 20 seconds	UP-movement hydraulic Solenoid	Activated (for 20 sec)	Y1	
14	ERC relief valves closing	MOV 0VDC	De-energized	Y16 + Y17	
15	END of ESD-2 actions				

4.4 MANUAL ERC-alarm

The manual ERC-alarm will be initiated by pressing the mushroom button onto the local panel and is hardwired connected to the ERC part of the Kanon PLC..

When the manual ERC-alarm is activated the following actions will be executed by Kanon PLC at once:
1) Both Pre-alarm as ERC-alarm shall be initiated;
2) The corresponding actions for ESD-1 and ERC-alarm shall be executed;
3) RED indicator "*MANUAL ERC-alarm* " on local panel will light.

4.5 RESET ERC-alarm (pushbutton "1")

It is only possible to reset the ERC-alarm when the MLA is not in ERC-alarm area (the ERC-alarm sensors on the MLA are not activated anymore) AND/OR the MANUAL ERC-alarm mushroom button is released AND the MLA is not pressurized anymore (PT in riser will detect pressure inside the riser).

The reset of ESD-2 means opening ERC valves and close ERC clamps can be performed only at:
1). NO ERC-alarminput from sensors and/or buttons;
2). Resetting only for the selected MLA.

After resetting the ERC-alarm the following happens:
1) The control system switches to Pre-alarm only;
2) The MLA remains in "manoeuvring mode".
3) Potential free contact (NO relay) "*ERC-alarm* " will be closed;
4) The RED indicator "manual ERC-alarm " on the local panel switches off (in case the MANUAL ERC-alarm mushroom button was used).

NOTE: the horn must be de-activated by pressing button "alarm acknowledge".

Step	Action	Actuator	Status	tag#	Remarks
RESETPROCEDURE AFTER ERC release					
1	MLA manoeuvring mode	Kanon PLC		Y9.1/ Y9.2 / Y9.3	MLA WILL REMAIN IN MANOEUVRING MODE UNTIL CONNECTION TO VESSEL
2	Close the ERC arming valve at base of the riser.	ERC arming valve	Closed		ERC disarmed indicator will light ON.
3	Bring the MLA into normal working area	Kanon PLC			
4	Reduce the pressure inside the riserpipe to <5 bar	Kanon PLC		PT in riser	Remain inletvalve closed at 0 bar in riserpipe until " ERC available" staus has been initiated again.
5	RESET ESD-2 & ESD-1	Pushbuttons LOP	De-energized	Y13, Y14, Y7.1, Y7.2 & Y8.1/2	Feedback signal to confirm closed status.
6	Bring the vessel to jetty.				
7	Reconnect the ERC upper part (on MLA) onto the lower part (on vessel).				
8	Place testing bolts between upper and lower ERC valve				
9	Press reset pushbuttons 1,2 & 3 all at once for 10 seconds.	1). "Reset pushbuttons 1, 2 & 3 2). Y7.1, Y7.2 & Y8.1/2	1). Pushbuttons pressed for 10 seconds; 2). Solenoids Energized (after 10 seconds);	Y7.1, Y7.2 & Y8.1/2	The solenoids will be energized after 10 seconds pressing and will be de-energized when one of the pushbuttons is released during reset procedure. (selected MLA only)
10	ERC clamp can be reconnected				
11	Connect all hydraulic hoses and signal cable between MLA and triple.				
12	Open the ERC valves.	1). Pushbuttons on LOP /radio); 2). Solenoid Y13	1). Pushbutton pressed during opening; 2). Solenoid energized.	Y13	**Opening of the valves only possible at NO pressure in riser and ERC ARMING valve AND coupler closed.**
ERC is reconnected. Follow up start up procedure to obtain " ERC available" status again and restart operation.					

5. ADDITIONAL ALARMS

5.1 Common fuse alarm

If the fuse of the ERC solenoids is malfunctioning the “common fuse alarm” will be initiated. The following actions will be executed by the Kanon PLC at once:
1). Horn (intermittent) and beacon activated;
2). Potential free contact (NO relay) “*Common-alarm*” will be opened;
3). The ERC solenoids (Y13, Y14, Y7.1, Y7.2, Y8.1 & Y8.2) will be de-energized (ERC not able to disconnect);
NOTE: the horn must be de-activated by pressing button “alarm acknowledge”.

5.2 Feedback failure ERC solenoids

If during testing or ERC ENABLED status one of the feedback signals is malfunctioning (*feedback signal is not coming in within 5 seconds are energizing the solenoid*) both the indicators “ARM IN ALARM” (*of the concerned MLA*) and “FEEDBACK SOLENOID FAILURE” starts flashing.

Check the modbus communication which solenoid is malfunctioning.

Reset of the alarm can be done by pressing “ ACKNOWNLEDGE” button.

6. PERMISSION TO LOAD CONTACT (PTL)

The Kanon control system provides a so-called “permission to load” signal. This is a potential free output contact (NO relay). A closed contact (logic=1) is permissive and a open contact is NOT permissive.
A PTL is a minimum requirement prior starting up the (un)loading procedure. In addition a confirmation from an operator on site is required.

The PTL signal will be provided only if the following interlock has been set:
1). No Pre-alarmsensors activated;
2). No ERC-alarm sensors activated;
3). No manual ERC-alarm activated;
4). No common fuse alarm active;
5). MLA not in hydraulic parking lock;
6). MLA not in manoeuvring mode;
7). MLA is connected to vessel manifold;
8). ERC clamp not released;
9). No low oil pressure alarm;
10). ERC Arming valve in armed position.
11). ERC valves opened (1 sensor input).
12). Pressure relief valves ERC de-energized.
13). ERC working PIN placed.
14). Main powerfeed available.
15). Feedback signal Y8.1 & Y8.2 healthy in ERC ENABLED status
16). NO “ERC test failure” occurs.

At initiation the “ERC ENABLED” status will be set as well.
As mentioned earlier the ERC ENABLED status will trip only if one of the following items 4, 10,13 & 15 will be removed from the interlock.

The PTL interlock output will be removed if any of the interlock signals (item 1 thru 15) will be removed. Kanon advices to stop loading operation by DCS when PTL is removed.

7. POWER FAILURE

During power failure of the control system the external UPS power source remain the Kanon PLC running.
The hydraulic accumulator will be standby to provide hydraulic power to energize the ERC if needed.
The Coupler is self-locking. At power failure the coupler remained closed at all times. A procedure is included in the IOM book to open the coupler in case of power failure manually.

If the main powersupply has been lost and the control panel is running on the UPS only following action will take place:
1). “POWER ON” indicator on LOP start flashing;
2). Hardwired output “ Common alarm” will be opened;
3). Hardwired output “Permission to load” will be removed.

At total power failure (UPS down as well) the MLA will switch to freewheel mode automatically.

8. TESTING PROTOCOL

Feedback test solenoids.
Because the MLA is connected and in operation 24/7 a mayor part of the hydraulic solenoids won't be activated for the long period. This could result at malfunctioning of these solenoids once need after a long time (get stock).

To prevent this, the solenoids must be activated on a frequently basis, during operation of the MLA, to keep them available once needed for manoeuvring the MLA and/or ERC release.

Therefore we implemented an autotest protocol performed by the Kanon PLC to maintain the solenoids in good condition.
This test will take approx. 2 minutes and will be performed by the Kanon PLC on regular basis. During this test the ERC function will be out of order and the indicator on LOP " autotest activated" will light ON.
The autotest procedure will be started only when NO Pre- and ERC-alarm is being activated to assure that the ERC function won't be needed during testing.

For the solenoids related to the ERC system a status feedback is foreseen to check if these solenoids are indeed activated during the test.
If for some reason the test fails the red indicator on panel "ERC test failure" will lit and permission to load output will be removed.

NOTE: During testing the MLA must be connected onto a dummy manifold or vessel!!

Step	Action	Actuator	Status	tag#	Remarks
TESTPROCEDURE WILL START AT NO ESD-1 and ESD-2 ONLY!!					
1	Indicator " ERC Solenoid test needed" start flashing every 90 days	Kanon PLC			On Modbus: "ERC solenoid test needed" to client DCS
2	Stop operation both MLA's				ERC function of both MLA's out of order
3	De-pressurize MLA to be tested.	Maximum PT < 5 bar	Calibration PT: 0-160 bar ~ 4-20 mA		
4	Select MLA to be tested	Local control only			
5	Close ERC valves of selected MLA	Radio transmitter/ local control	closed	12S8.1/2/3	ERC valves closed feedback (3oo3 sensors)
6	Place ERC arming valve in disarmed mode.		Valve closed		
7	Remove the working PIN from ERC assembly of selected MLA			12S7.3	
8	Press " Start ERC solenoid test"	Kanon PLC			Test will start when above mentioned actions are done only
9	Feedback Y15 closed	Prox switch	Closed contact	Y15	At no feedback closed signal testing must be stopped.
10	ERC accu solenoid	Solenoid	Energized	Y15	Feedback signal to confirm closed status.
11	HPP will be blocked	Kanon PLC	tripped	P242068A96	
12	Indicator "ERC solenoid test activated"	Kanon PLC	Light ON (at flashing check status of above test preparation)		General indicator light on LOP
13	All solenoids in HPP and valve block	Solenoids	De-energized	Y1 thru Y14 + Y16 + Y17	Feedback signal to PLC to confirm de-energized

					status Y8.1 + Y8.2
14	Manoeuvring solenoids testing	Solenoids	Energized	Y1 thru Y12	Energized (one by one) for 2 sec/ each
START ERC circuit testing (solenoids will be tested one by one)					
15	ERC valve OPEN	Solenoid	Energized	Y13	Feedback signal to PLC to confirm activation
16	ERC valve CLOSE	Solenoid	Energized	Y14	Feedback signal to PLC to confirm activation
17	ERC solenoid CLAMP close	Solenoid	Activated	Y7.1	Feedback signal to PLC to confirm activation
18	ERC solenoid CLAMP open	Solenoid	Activated	Y7.2	Feedback signal to PLC to confirm activation
19	ERC solenoids CLAMP control	relais	Activated	Y7.1 / Y7.2	Feedback signals to PLC to confirm activation
20	ERC circuit hydraulic powersupply 1	Solenoid	Activated	Y8.1	Feedback signal to PLC to confirm activation
21	ERC circuit hydraulic powersupply 2	Solenoid	Activated	Y8.2	Feedback signal to PLC to confirm activation
22	ERC relief valve 1 or 2 OPEN	Solenoid	Activated	Y16 OR Y17	Only one ERC relief valve will be opened at the time during each test and will change from valve 1 to valve 2 vica versa automatically. **NOTE: LOUD NOISE DURING OPENING**
23	At opening one of the relief valves a loud noise will be heard due to the high pressure relief between the ERC valves.				At no noise the relief has not been opened.
24	Indicator “ERC solenoid test activated”	Kanon PLC	Light OFF		General indicator light on LOP
25	Open ERC valves of selected MLA	Radio transmitter/ local control			
26	Place the working PIN back in the ERC assembly of selected MLA			12S7.3	
27	Open ERC arming valve				
28	ERC available again				MLA can be put back in operation.
29	“ERC available” indicator	Kanon PLC	Light ON		
30	“Test failure”indicator	Kanon PLC	Light ON		At failure of a solenoid. See modbus communication for detail info about the failure.
END OF ERC circuit testing					

Procedure to bring ERC function “live” after autotest ERC solenoids.					
Step	Action	Actuator	Status	tag#	Remarks
1	Check all interlock signals to achieve ERC enabled status	Kanon PLC			
2	If ERC enabled remove output contact “auto test activated”.	Kanon PLC			PFC will be closed.
3	Activate all ERC solenoids	Kanon PLC	Energized	Y7.1 / Y7.2 / Y8	
4	“ERC available” indicator	Kanon PLC	Light ON		

9. DIAGNOSE ERC FUNCTION

The solenoids related to the ERC system are equipped with a feedback signal to monitor the position of these valves continiously (including line fault detection) and allows a detection of dangerous malfunctioning.

See table for these detections and the related action in different modes of the system.

#	Valve	Tag#	Status	Healthy Contact to PLC	Action non healthy detection
Status ERC solenoids at ERC DISABLED					
1	ERC accu solenoid	Y15	De-energized	I= 0,5 mA	Y8.1 & Y8.1 MUST de-energized
2	ERC valve CLOSE	Y14	De-energized	I= 0,5 mA	Y8.1 & Y8.1 MUST de-energized
3	ERC valve OPEN	Y13	De-energized	I= 0,5 mA	Only allowed at No pressure in riser
4	ERC solenoid CLAMP close	Y7.1	De-energized	I= 0,5 mA	Y8.1 & Y8.1 MUST de-energized
5	ERC solenoid CLAMP open	Y7.2	De-energized	I= 0,5 mA	Y8.1 & Y8.1 MUST de-energized
6	ERC circuit hydraulic powersupply 1	Y8.1	De-energized	I= 0,5 mA	When NO ESD-2 reset: - HPP trip; - Y15 Energized - Horn & beacon - Indicators “arm in alarm” + “autotest actvated” flashing
7	ERC circuit hydraulic powersupply 2	Y8.2	De-energized	I= 0,5 mA	When NO ESD-2 reset: - HPP trip; - Y15 Energized - Horn & beacon - Indicators “arm in alarm” + “autotest actvated” flashing
Status ERC solenoids at ERC ENABLED (at NO ERC-alarm)					
1	ERC accu solenoid	Y15	De-energized	I= 0,5 mA	“ERC function available” indicator flashing
2	ERC valve CLOSE	Y14	De-energized	I= 0,5 mA	Y8.1 & Y8.1 MUST de-energized
3	ERC valve OPEN	Y13	De-energized	I= 0,5 mA	
4	ERC solenoid CLAMP close	Y7.1	De-energized	I= 0,5 mA	
5	ERC solenoid CLAMP open	Y7.2	De-energized	I= 0,5 mA	- Y8.1 & Y8.1 MUST de-energized - ERC ENABLED status removed; - “Permission to load” contact removed.
6	ERC circuit hydraulic powersupply 1	Y8.1	Energized	I= 4,5 mA	- When Y8.2 is healthy: indicator “ ERC available” + “autotest activated” starts flashing. - When both Y8.1 as Y8.2 are not healthy remove ERC ENABLED status and remove “permission to load” output. Light flashing “ERC test failure” with horn and beacon.
7	ERC circuit hydraulic powersupply 2	Y8.2	Energized	I= 4,5 mA	- When Y8.1 is healthy: indicator “ ERC available” + “autotest activated” starts flashing. - When both Y8.1 as Y8.2 are not healthy remove ERC ENABLED status and remove “permission to load” output. Light flashing “ ERC test failure” with horn and beacon.

DOEDIJNS
VYDRAULICS GROUP

General Installation, Operation & Maintenance Instructions

for

Hydraulic Power Units

and

Hydraulic Assemblies

V22.5

Doedijns BV | Bleiswijkseweg 51 | 2712 PB Zoetermeer | The Netherlands | T +31 (0)88 091 26 00 | info@doedijns.com | www.doedijns.com | IBAN (EUR) NL86INGB0006233632 | IBAN (USD) NL59INGB0020214243 | SWIFT INGBNL2A | Trade reg. no. 34139835 | VAT no. NL809086438B01

Index

1 About this document 3

2 Safety instructions 4

2.1 Safety instructions in this document 4
2.2 General safety instructions 4
2.3 Intended use 4
2.4 Improper use 5
2.5 Explosive environments 5
2.6 Personnel qualifications 5
2.7 Obligations of the operator 5
2.8 Adhere to the following instructions 6

3 Product description 7

3.1 Hydraulic power units 7
3.2 Hydraulic assemblies 7
3.3 Product identification 7

4 Transport and storage 8

4.1 Transporting hydraulic power units 8
4.2 Storage of hydraulic power units 11

5 Installation 12

5.1 Unpacking 12
5.2 Installing the hydraulic power unit 12
5.3 Installing the hydraulic system 12
5.4 Connecting to a water or air supply 14
5.5 Installing the electrical system 14

6 Commissioning 15

6.1 First commissioning 15

7 Operation 20

8 Maintenance 21

8.1 Maintenance documentation 21
8.2 Cleaning 21
8.3 Inspection, maintenance, repair 22
8.4 Spare and wear parts 28

9 Decommissioning 29

9.1 Preparing for decommissioning 29
9.2 Decommissioning the hydraulic power unit 29

10 Disassembly 30

10.1 Preparing for disassembly 30
10.2 Disassembling the hydraulic power unit 31

11 Disposal 32

12 Extension and conversion 33

13 Troubleshooting 34

13.1 How to proceed with troubleshooting 34
13.2 Overview of the impact of defects 34

14 Technical data 37

15 Glossary 38

1 About this document

These instructions contain important information on safe and correct transport, assembly, commissioning, maintenance, disassembly and basic troubleshooting of hydraulic power units and hydraulic assemblies.
These instructions must be read thoroughly, in particular chapter 2 “General safety instructions”, before working with the hydraulic power unit or hydraulic assembly.
This manual provides general operating and maintenance instructions pertaining to hydraulic power units and assemblies that have been designed and manufactured to customer specifications. The product-specific documentation must be kept at hand when reading these instructions (see chapter 3 “Product description”).
Throughout these instructions the term “hydraulic power unit” is used synonymously for hydraulic assemblies. Information therefore likewise applies to hydraulic assemblies, even where this is not explicitly stated. Wherever an explicit differentiation needs to be made the terms “hydraulic power unit” and “hydraulic assembly” will be specified explicitly.

Related documents:

- Documentation for the complete machine.
- Documentation pertaining to other components, assemblies and partly completed machinery that are part of the complete machinery.
- Generally applicable, legal or otherwise binding European and national regulations as well as the relevant stipulations for your country pertaining to the prevention of accidents and protection of the environment.

2 Safety instructions

2.1 Safety instructions in this document

These operating instructions contain warning signs followed by an instruction wherever there is a risk of personal injury or damage to equipment. The measures described for preventing these hazards must be observed.

Warning signs:

If this information is disregarded, it may result in injury and/or machine malfunction or breakdown.

Warning of a danger spot

Warning of dangerous, electrical voltage

2.2 General safety instructions

The hydraulic power unit is designed and manufactured considering the provisions of directives, standards and relating specifications. Nevertheless a risk of personal injury or damage to property remains if the following safety instructions and further warnings in this document are not observed:

- These instructions must be read completely and thoroughly before working with the hydraulic power unit or hydraulic assembly.
- Product-specific documentation must kept at hand (see chapter 3 “Product description”) when reading these instructions.
- These instructions and relevant product-specific documentation must be readily available and accessible to all users.
- These instructions and the product-specific documentation must be included when passing the hydraulic power unit or hydraulic assembly on to a third party.

When the hydraulic power unit is included in a complete machine, the installation of the hydraulic power unit into the machinery may introduce additional potential hazards. This applies in particular to hydraulic and/or electric controls that drive or control mechanical movement. Therefore it is essential for the manufacturer of the complete machine to undertake an independent risk assessment and to provide operating instructions for the complete machine. This Doedijns instructions are no substitute for the operating instructions of the complete machine.

2.3 Intended use

Concerning intended use differentiation will be made between hydraulic power units and hydraulic assemblies.

2.3.1 Hydraulic power units

The hydraulic power unit is partly completed machinery in terms of EC Machinery Directive 2006/42/EC and is in these terms not considered to be a ready-to-use machine.
The hydraulic power unit is exclusively intended for integration into a machine or system or for assembly with other components to form a complete machine or a system.

The product may only be commissioned if it has been integrated into the machine or system for which it is designed and if the complete machine or system fully complies with the requirements of the EC Machinery Directive 2006/42/EC.
The hydraulic power unit is not considered to be a safety component in terms of EC Machinery Directive 2006/42/EC.
The operating conditions and performance limits of the hydraulic power unit as specified in the product specific technical data must be observed. The hydraulic power unit is a work appliance and not designed for private use. Intended use includes having fully read and understood these operating instructions, especially chapter 2 “General safety instructions”.

2.3.2 Hydraulic assemblies

A hydraulic assembly is intended exclusively for integration into a machine or system or to be assembled with other components to form a machine or system. The product may only be commissioned if it has been integrated into the machine or system for which it is designed.
The hydraulic assembly is not considered to be a safety component or partly completed machinery in terms of EC Machinery Directive 2006/42/EC.
The operating conditions and performance limits specified in the product-specific technical data must be observed. The hydraulic assembly is a work appliance and not designed for private use. Intended use includes having fully read and understood these instructions, especially chapter “2 General safety instructions”.

2.4 Improper use

Any use of the hydraulic power unit or the hydraulic assembly other than described in paragraph 2.1 “Intended use” is considered as being improper.

2.5 Explosive environments

Doedijns hydraulic units or assemblies may only be used in an explosive environment when the equipment has been specifically designed for use within the specific hazardous area conditions as then explicitly specified on the equipment nameplate and in the product-specific technical data.

2.6 Personnel qualifications

Assembly, commissioning, service (incl. maintenance, inspection and repair) and disassembly require a basic knowledge of mechanics, electrics and hydraulics, as well as familiarity with the associated technical terms. In order to ensure operational safety, these activities may only be carried out by qualified technical personnel or an instructed person under the direction and supervision of a qualified person.
Qualified personnel are those who can recognize potential hazards and apply the appropriate safety measures due to their professional training, knowledge and experience, as well as their understanding of the relevant conditions pertaining to the work to be undertaken. Qualified personnel must observe the rules/laws relevant to the specific subject area.

2.7 Obligations of the operator

- The operator of the hydraulic power unit must provide personnel training on the following topics on a regular basis:
  - Observation and use of the operating instructions as well as the legal stipulations
  - Intended use and operation of the Doedijns product
  - Observation of the instructions from the factory security office as well as the operator’s work instructions
  - What to do in an emergency

Doedijns offers training support in specific fields. Contact Doedijns directly for the possibilities at +31 (0)88 091 26 00 or send an email to info@doedijns.com.

2.8 Adhere to the following instructions

1. Before installation, check the hydraulic power unit for visible transport damage (e.g. cracks, missing lead seals, screws, protective covers).
2. Hydraulic systems operate under high pressure. A hydraulic power unit or system may be used only when it is in a perfect technical condition.
3. Hydraulic power units and assemblies may be used only within the performance range specified in the product specific technical data.
4. Under no circumstances should the hydraulic power unit or assembly be subjected to inadmissible mechanical loads. Do not place any objects on top of the hydraulic equipment.
5. Only use designated lifting points.
6. Provide for sufficient stability of the hydraulic power unit.
7. In this context, observe the maximum load-bearing capacity of the foundations or ground as well as that of the attachment devices and vehicles used for transport.
8. Avoid damage of any kind on pressurized or functional components of the hydraulic power unit.
9. Ensure that all associated safety devices pertaining to the hydraulic power unit are existent, correctly installed and fully functional. Do not displace, bypass or disable safety devices/equipment.
10. Never remove or damage lead seals that have been fitted by Doedijns.
11. If it is necessary to temporarily disable any safety equipment, e.g. for commissioning or maintenance work, always take appropriate measures to ensure that no potential injury to persons or damage to property can occur.
12. Keep the manufacturer's Material Safety Data Sheet for the applied hydraulic oil at hand and observe the safety information contained therein.
13. The regulations regarding accident prevention and environmental protection applicable in the country where the product is used and at the workplace must be observed.
14. Only persons who have been authorized by the operator may be granted access to the immediate vicinity of operation. This also applies during machine standstill.
15. Only authorized personnel are allowed to operate the adjusting mechanisms of components or parts, under the provision that the hydraulic power unit is used as intended.
16. Only authorized and qualified personnel are allowed to perform maintenance and repair on the hydraulic power unit.
17. Persons who assemble, operate, dismantle, maintain or repair machinery must not consume any alcohol, drugs or medication that may have a detrimental effect on their reactions.
18. For maintenance and repair a hydraulic system or assembly must be switched off and secured (locked) against unintentional switching on.
19. When the hydraulic system or parts thereof need to be opened the hydraulic system must first be fully depressurised.
20. If it is necessary to work at height entailing a fall hazard, suitable safety precautions must be taken (e.g. provision of gratings, handrails or harnesses).
21. The hydraulic power unit or parts thereof may heat up during operation to the extent that you may sustain burns. Always wear heat-proof gloves and protective clothing when operating or maintaining an hydraulic unit or system.
22. Suitable measures must be taken to prevent any slip hazard caused by oily surfaces that may e.g. result from maintenance work.
23. In the event of leaks do not allow any part of your body to come into contact with the oil jet. Never try to stop or seal the leak or the oil jet using a cloth. In case of leaks or other system irregularities always switch off the complete system.
24. Leaks may cause an oil mist. As hydraulic fluids based on mineral oil are flammable take special care if there are potential ignition sources in the vicinity.
25. Avoid oil spills as hydraulic fluids are harmful to people and the environment. In case of contact with body parts immediately consult the applicable fluid Material Safety Data Sheet.
26. The Doedijns warranty applies only to the configuration supplied. The warranty will not apply if the product is incorrectly assembled, installed, not used as intended or is handled improperly.
27. Observe the specific information in the following chapters regarding product life phases.
28. Always observe the operating instructions for the complete machine or system.

3 Product description

The hydraulic power units or hydraulic assemblies for which these operating instructions have been prepared are exclusively intended for installation into machinery. As a general rule the hydraulic power unit or assembly are designed and manufactured to customer specifications. For the specific description of your product refer to the relevant product-specific documents such as:

- Technical specification
- Functional description
- Hydraulic diagram or P&ID
- Parts list
- General Assembly drawings

3.1 Hydraulic power units

Hydraulic power units are drive systems for hydraulic machines. Generic the hydraulic power units consist at least of:

- Electric or air driven motor-pump set
- Pump pressure-limiting device
- Tanks, piping and hose assemblies, fittings, etc.
- Fluid level gauge

In addition a hydraulic power unit may contain:

- Hydraulic controls
- Accumulator, possibly with separate nitrogen pressure tanks
- Additional safety devices to prevent unintended pressures
- Additional equipment for monitoring operating conditions (e.g. pressure, temperature, filling level and filter contamination switches or transmitters)

3.2 Hydraulic assemblies

Hydraulic assemblies include e.g. valve stands, accumulator stations, motor-pump units, boosters, circulation stations for filtration and/or cooling.

3.3 Product identification

The product is unambiguously identified by:

- The nameplate
- The product-specific documentation
- The delivery note and accompanying documents

4 Transport and storage

Observe the transport instructions, e.g. on the packaging.
When storing and transporting the product always observe the ambient conditions specified in Chapter 14 “Technical data”.
If the package has to be opened e.g. for inspection purposes, you should reseal the packaging to the condition in which it was supplied.
Wherever possible the packaging should not be removed until directly before installation of the unit.

4.1 Transporting hydraulic power units

Danger to life due to tumbling, falling or uncontrolled movement of the hydraulic power unit!

If not transported appropriately, the hydraulic power unit may lose its stability and thus be knocked over, fall or move in an uncontrolled way.

- Check the weight and also the location of the centre of gravity of the hydraulic power unit.
- Place the product on a suitable foundation / on suitable ground.
- By means of additional suitable measures (e.g. by securing holding down points or with the use of cranes) provide for sufficient stability before removing any packing/transit materials or fixtures.
- Only the intended locations and attachment points should be used for securing or lifting the hydraulic power unit.
- Hydraulic power units must never be attached to or lifted at the mounted components (piping, hoses, manifolds, electric motors, accumulators, etc.).
- Observe the maximum load-bearing capacity of the attachment devices.
- Observe the maximum load-bearing capacity of the floor conveyors.
- Ensure that no unauthorized persons are within the hazard zone.

Danger to life due to the ejection of high-pressure oil or machine malfunctions during operation!

In the case of improper transport of the hydraulic power unit, pressurized or functional components may become damaged.

- Ensure that these components do not come into contact with the attachment devices or lifting tools during transport
- Ensure that hydraulic power units are not attached to or lifted at these components.

4.1.1 Preparing the power unit for transport

The following preparations must be carried out before transporting the hydraulic power unit:

- Check the space required for the installation of the hydraulic power unit at the place of use.
- Check the transport route. Depending on the method of transport, allow for additional space around the hydraulic power unit.
- Check the maximum admissible load bearing capacity of the roads, bridges, crossings, etc.
- Prior to transportation of the hydraulic power unit, depressurize the installed accumulators on the oil side. If possible, reduce the pressure on the gas side to a value of 2 bar (200 kPa).

Doedijns always delivers hydraulic power units without first filling with oil. Any deviations from this rule are described explicitly in the product-specific documentation. Due to factory inspection and testing there may however still be oil residues in the product.

4.1.2 Determination of the centre of gravity

The location of the centre of gravity is generally specified on the assembly drawing.
Wherever possible, the location of the centre of gravity is marked on the packaging by the following symbol:

Fig. 4.1 Symbol for marking the centre of gravity

4.1.3 Use of lifting points

Danger to life due to tumbling, falling or uncontrolled movement of the hydraulic power unit when using unsuitable attachment points!

After a longer period of use the lifting points may no longer be in place, be sufficiently stable or identifiable as such.

- Refer to the product-specific documentation for the intended lifting points and use only the ones identified therein.
- Check the stability of the lifting points if you intend to transport the hydraulic power unit after dismantling.
- Replace missing and/or defective lifting points if possible. This work should be carried out in a professional manner.
- Insert screw-in lifting points into the tapped hole and hand tighten fully.
- If necessary, mark any unrecognizable lifting points in a clearly visible colour.
- Lifting points are fixtures in the form of lugs, collars or shackles that are connected to the hydraulic power unit by means of welded or threaded attachment. They are designed for lifting or holding down the hydraulic power unit during transport. Examples of lifting points of hydraulic power units are shown in fig. 4.2 (for information only):

Fig. 4.2 Examples of attachment points (1. Welded type / 2. Screwed type)

4.1.4 Manual transport

Risk of injury to persons undertaking manual lifting/handling due to overloading and incorrect posture!

In the case of lifting/handling, there is the risk of damage to health due to overloading and incorrect posture.

- The limits of the respective persons involved in manual lifting/handling must be realistically assessed. Muscular strength and constitution differs considerably among human beings.
- Wherever possible, suitable lifting aids should be used such as e.g. carrying straps.
- Always use appropriate techniques when lifting, setting down and moving products.

4.1.5 Transport using forklifts and similar floor conveyors

Danger to life due to falling or uncontrolled movement of the hydraulic power unit!

If not transported appropriately, the hydraulic power unit may be knocked over, fall or move in an uncontrolled way.

- When using floor conveyors as a means of transport ensure a stable centre of gravity position.
- The hydraulic power unit must not deviate from its intended orientation.
- Secure the hydraulic power unit against any resulting acceleration forces as required.

When using floor conveyors the hydraulic power unit may only be transported by personnel who can prove they hold the relevant qualifications, including safety training, for the respective device.
You should proceed as follows:

- Use suitable temporary protective devices e.g. wooden or plastic elements to protect the hydraulic power unit against the contact surface of the fork so that the paintwork cannot be damaged during lifting and transport.
- Secure the hydraulic power unit at the forklift against tilting. To this purpose use suitable attachment devices like e.g. tie downs.
- Carefully lift the hydraulic power unit taking into consideration the stable centre of gravity location and transport it to the desired position.
- Ensure that the built-on components of the hydraulic power unit do not come into contact with the attachment device or lifting tools during transport.
- Carefully set the hydraulic power unit down again and remove the holding down / lifting equipment and any temporary protective devices.

4.1.6 Transport using cranes and similar lifting tools

Danger to life due to falling or uncontrolled movement of the hydraulic power unit!

If not transported appropriately, the hydraulic power unit may be knocked over, fall or move in an uncontrolled way.

- When using lifting tools, ensure a stable centre of gravity position.
- The hydraulic power unit must not deviate from its intended orientation. If necessary, attach suitable safety and/or catch devices.
- If using cranes as a means of transport, attachment devices e.g. lifting straps, harnesses or chains should be used.
- Use only the intended locations and attachment points when lifting.
- Ensure that the built-on components of the hydraulic power unit do not come into contact with the attachment device or lifting tools during transport
- The edges of the hydraulic power unit may cause damage to the fabric lifting straps or harnesses. An edge protector should therefore be used if necessary.
- When using uncovered chains, scratches in the paintwork may result. If necessary, use suitable protection for these surfaces e.g. blankets.
- Lift and lower the hydraulic power unit slowly and carefully.
- Only lift the device as far of the floor as necessary.

4.1.7 Freight transport

Danger to life due to tumbling, falling or uncontrolled movement of the hydraulic power unit!

If not transported appropriately, the hydraulic power unit may be knocked over, fall or move in an uncontrolled way.

- Secure the hydraulic power unit against any resulting acceleration forces as required.

The various regulations of the assigned forwarding agents e.g. shipping companies, railway companies, forwarders or airlines must be observed.

- Secure the hydraulic power unit onto the transport vehicle, e.g. by the holding down points.
- Ensure that the built-on components of the hydraulic power unit do not come into contact with the attachment devices during transport.
- Some products need to be transported in a lying position e.g. accumulator stands. Use the intended attachment points for laying the products down and securing them.

4.2 Storage of hydraulic power units

Observe the following storage times:

Storage conditions	Duration
Indoor storage in a dry room at constant temperature	6 months
Outdoor storage - product is protected against damage and water ingress	3 months

- When the storage time exceeds the values specified, flush the hydraulic power unit before commissioning using a suitable flushing fluid. The flushing procedure should be carried out as described in Chapter 7.1.9 “Flushing the hydraulic system”.
- When necessary, replace the components for which a specified maximum storage time is exceeded (e.g. for hoses, compensators, accumulators).

5 Installation

This chapter describes the assembly of the product at its place of use as well as the connection of the product to the hydraulic system, the electrical systems and the water supply of the machine.
For information regarding the installation into the complete machine, particularly regarding its overall function and logic mode of operation, please refer to the instructions and/or the documentation for the complete machine.

Risk of personal injury and damage to property!

A basic knowledge of hydraulics is required for assembling the hydraulic power unit.

- Only qualified personnel (see Chapter “2.3 Personnel qualifications”) are permitted to assemble the hydraulic power unit.

5.1 Unpacking

- Remove the product packaging.
- Dispose of the packaging material in accordance with the national regulations in your country and/or your company-internal specifications/procedures.

5.2 Installing the hydraulic power unit

Risk of injury due to tumbling, falling or uncontrolled movement of the hydraulic power unit!

Ensure that the product is sufficiently stable.

- Observe the information on handling the product in chapter 4 “Transport and Storage”.
- Any packing/transit materials, straps, props or fixtures should only be removed if stability has been ensured by other means.
- Place the hydraulic power unit on a suitable foundation. Observe the specifications of the overall weight.

To assemble the hydraulic power unit you should proceed as follows:

- Position the hydraulic power unit or the assembly as specified in the product specific documentation.
- Ensure that the footprint contact associated with mounting is consistent.
- Level the hydraulic power unit so that its longitudinal and transverse axes are horizontal.
- Prevent possible bouncing by suitable means (e.g. height adjustment of feet, insertion of shims, packers).
- Securely fix the product at the mounting positions as specified in the product specific documentation.
- When stainless steel parts are mounted to carbon steel parts (or vice versa) proper isolation must be provided to prevent galvanic corrosion.

5.3 Installing the hydraulic system

Risk of injury when assembling under pressure!

If the product is not depressurized before starting the installation, there is a risk of injury and/or damage the unit or system components.

- Always depressurize the relevant part of the system before assembling the hydraulic power unit.

Damage to the hydraulic power unit!

When hydraulic lines and hoses are installed under mechanical stress, they are exposed to additional mechanical forces during operation which reduces the service life of the hydraulic power unit and the complete machine or system.

- Assemble the piping, tubing and hose assemblies without mechanical stress and/or loads.

Wear, tear and malfunctions

The cleanliness of the hydraulic fluid has a considerable impact on the cleanliness and service life of the hydraulic system as a whole. Any pollution/contamination of the hydraulic fluid will result in wear & tear and malfunctions. In particular foreign bodies e.g. welding beads or metal swarf in the hydraulic lines may damage the hydraulic power unit.

- Always ensure absolute cleanliness
- Install the hydraulic power unit free from any pollution/contamination.
- Ensure that all connections, hydraulic lines and add-on units (e.g. measuring instruments) are clean.
- Ensure that no pollutants are able to penetrate when sealing connections.
- Ensure that no detergents are able to penetrate the hydraulic system.
- Do not use cleaning rags/cotton waste or linty cloth for cleaning.
- Do not under any circumstances use hemp as a sealant.

Risk of injury from ejection of high-pressure oil!

If the nominal pressure is exceeded, components may burst. The connection lines should be dimensioned in accordance with the performance data from the product specific documentation.

- Only use components that are designed for the applicable pressures.

Risk of injury from ejection of high-pressure oil!

Fittings with metric or Whitworth threads may for certain sizes be mismatched without this being immediately evident. Fittings with threads that are mismatched will not withstand the specified nominal pressure.

- Ensure that there is no risk of confusion with respect to the correct screw fittings.

Remove the blanking plugs and flange covers (coloured plastic) and replace them with pressure-resistant fittings or flanges.

- Observe the manufacturer's installation instructions for the screw fittings to ensure there is no external leakage. It is recommended to use fittings with elastic seals.
- Before installing, clean the connection lines to the hydraulic system, ensuring they are free from dirt, scales, chippings, etc. Welded pipes must be blank on the inside and flushed.
- Do not use cleaning rags/cotton waste for cleaning.

The hose assemblies should be installed such that:

- Kinking and tensile load of the hose is avoided during operation,
- The hose is not twisted or turned,
- The outer layer of the hose does not rub of through abrasion or impact,
- The weight of the hose assembly does not cause inadmissible loading.

If a hose assembly becomes detached and there is a risk of whipping, it is advisable to fit a hose safety catch. If the hose assemblies are equipped with loosening-resistant fittings, no safety catch is required.

5.4 Connecting to a water or air supply

- The fittings must be tightened according to manufacturer specifications.
- Lay the lines to the water or air connections provided and connect them according to the product specific hydraulic circuit diagram.

5.5 Installing the electrical system

Risk of injury when installing under voltage!

Failing to switch of any power supplies before installation of the product may cause injury or destruction of the product or damage to system components.

- Always switch of all power supplies to the relevant system before installing the product.

5.5.1 Earthing and potential equalization

Hydraulic power units are supplied with one or more external earthing connections.
Potential equalization within the hydraulic power unit will only occur if the electrical wiring of the unit components was included in Doedijns' scope of delivery. Otherwise potential equalization must be carried out by the machine manufacturer when the hydraulic power unit is wired to the machine.

The hydraulic power units must be earthed!

The earthing line and the lines for the potential equalization must have the minimum cross-section as per VDE regulations and a yellow-green sheath or labelling.
Before connecting the cables, you should earth the devices that are to be connected and provide for potential equalization via a common equalizing bar.

5.5.2 Laying power supply and control cables and connecting the electricity supply

- Electrical installation must be performed in accordance with the currently applicable rules and regulations.
- Ensure that the power supply is disconnected and also safeguarded against being switched on unintentionally.

5.5.3 Installing the electrical control and monitoring equipment

Connect the control and monitoring equipment (switching devices, open-loop or closed-loop equipment or frequency converters) according to the relevant component instructions, taking into account appropriate safety measures and precautions.

6 Commissioning

In according with EU Machinery Directive 2006/42/EC commissioning must not be undertaken until it has been determined that the machinery into which the hydraulic power unit is to be installed complies with the provisions of all relevant guidelines and directives.
The combination of components and partly completed machinery may give rise to other types of hazard. It is therefore essential that the information in the operating instructions for the complete machine is observed.
This applies in particular to hazard that may result from mechanical movements of the machine initiated by the hydraulic power units and drives (cylinders, motors or other actuators).

Risk of personal injury and damage to property!

If the hydraulic power unit is not assembled correctly this may cause personal injury or damage to hydraulic power unit and/or system while commissioning the unit.

- Ensure that the hydraulic power unit has been installed correctly by qualified personnel before commencing commissioning.

Damaging the hydraulic power unit!

Polluted oil can result in wear and tear and malfunctions. In particular foreign bodies, e.g. welding beads or metal swarf, in the suction line may damage the hydraulic power unit.

- Ensure an absolute clean working environment.
- Ensure that absolute cleanliness is observed during commissioning work.
- Ensure that no pollutants are able to penetrate when sealing the measuring connections.

Risk of personal injury and damage to property from leaking oil!

Hydraulic fluid may leak out if blanking plugs have not been removed and replaced.

- Before commissioning, remove all plastic plugs and replace them with pressure-resistant fittings and/or flanges.

Damaging the hydraulic power unit!

The hydraulic power unit will be damaged when it is commissioned without oil or with insufficient oil.

- Before commissioning or re-commissioning, ensure that the oil tank as well as the suction and work lines of the hydraulic power unit and components are filled with oil according to the manufacturer's specifications and that they remain sufficiently filled during commissioning.

6.1 First commissioning

6.1.1 Before commissioning

- Ensure that the system is in a good, work-safe condition.
- Open the valves in the cooling water line (if present).
- Open the valves in the suction line (if present).
- Open the pressure gauge air relief to prevent measuring errors (change from “Closed” position to “Open”).

6.1.2 Valve settings

- Set operating pressure valves and flow control valves to the lowest settings possible.
- Bring directional valves in their basic position.
- Do not energize proportional valves to the command value.

Do not make any changes on sealed valves.

Do not change the factory settings. Do not set or adjust valves that, according to the technical specifications (circuit diagram or parts list), have been provided with a fixed factory setting.

6.1.3 Safe handling of pressure tapping points

When setting pressure valves the respective pressures must be displayed. This can be done by using fixed installed pressure gauges or digital pressure indicators or by connecting external measuring equipment. For this measuring couplings have been installed within the hydraulic power unit. As the measuring points can be operated while the system is under pressure, extreme caution is required!

Risk of injury from inappropriate installation with system under pressure!

Measuring hoses have no blocking or closing function.

- Before connecting the measuring hose to the measuring coupling ensure that the other end of the hose has been connected to the measuring equipment (e.g. pressure gauge or pressure transducer) and that it is pressure-tight.

If the hydraulic power unit includes a measuring device that is connected to both measuring hose and coupling, the connection may only be opened on the coupling side.
Figure 6.1 shows the position for safe separation of the measuring equipment from the pressurized measuring coupling of the hydraulic power unit.

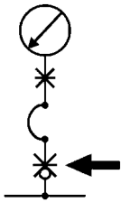

Fig. 6.1 Position for safe separation of measuring equipment (as indicated with the arrow)

Risk of injury from inappropriate installation with system under pressure!

Measuring connections may also be assembled with a hexagon bolt fitting in the hydraulic power unit. These are not designed for (dis)connection under pressure.

- This kind of connections may only be disconnected when the hydraulic circuit has been depressurized.

6.1.4 Accumulators

If the hydraulic power unit includes accumulators, the instructions applicable at the place of installation are to be complied with before commissioning as well as during operation. Product-specific Operating Instructions are supplied with each accumulator.

- Ensure that these documents are kept together with the accumulator. Experts will need these for subsequent inspections.
- On the oil side the hydraulic power unit must be sealed tightly, bled (see chapter 6.1.7 “Bleeding the complete hydraulic system of the machine) and depressurized.
- Fill the accumulator according to the information in the circuit diagram to the prescribed pre-set gas pressure.
- The filling and measuring procedures must be undertaken using a testing and filling device (refer to the product-specific operating instructions for this testing and filling device).

Affix a label to the accumulator specifying the accumulator filling pressure and note this value in the circuit diagram. This will enable you to perform a comparative pressure check at a later date.

For gas filling only high purity 99,99% Nitrogen (grade 4.0) should be used as gas!

The operator has the sole responsibility for complying with the inspection to be carried out before commissioning as well as for subsequent inspections.

6.1.5 Filling the hydraulic system

Fill the hydraulic system with a suitable oil adhering below instructions:

- Ensure the applied hydraulic oil meets the required cleanliness level.
- Ensure absolute cleanliness when filling the hydraulic system.
- If after transport or storage the hydraulic power unit is contaminated, clean the filter inlets on the tank before opening.
- Never remove filter screens at the filler neck and/or the filter insert while filling.
- In case of longer transport or storage times, check the tank for any water present and if so remove it via the drain valve or plug.

Recommendation: Experience shows that the cleanliness class required for operation of the hydraulic power unit and hydraulic system is mostly already exceeded in case of using new oils from an original container. To ensure that the cleanliness class is acceptable, use pre-flushed oil and a special filter unit for filling the hydraulic power unit or use a filter station with fine filter.

When filling pump housings:

- For pumps with a drain line, fill the housing with oil (see also product-specific operating instructions).
- Observe maximum and minimum fluid levels, taking into consideration tank volumes, lines, drives, etc.

6.1.6 Activating the electrical supply

See machine manufacturer’s operating instructions.

6.1.7 Bleeding the complete hydraulic system of the machine

See the machine manufacturer’s operating instructions.
The hydraulic system should be bled at the hydraulic components at the highest point.

6.1.8 Commissioning

The following steps are to be performed unless superordinate commissioning instructions applicable at machine level are to be observed.

Risk of personal injury and damage to property

Commissioning will activate machine functions.

- Ensure that the existing safety devices are activated.
- Start the electric motor in inching mode. Check the direction of rotation.
- Flush the hydraulic system as described in paragraph 6.1.9.
- Operate the directional valves and extend and retract the actuators several times. Repeat the bleeding processes. (Bleeding is ensured if there is no oil foam in the tank, no jerky movements at the actuator and no abnormal noises).
- Operate the system at low pressure until the hydraulic power unit is completely bled. Increase the load in steps.
- Observe the fluid level in the tank and refill if necessary.
- Monitor the operating temperature as it sets itself if the machine has been in full operation for several hours.
- Check the connection points for tightness, seal any leakage points, check the connection points again for tightness after a few hours.

Chapter 13 “Troubleshooting” can be used for systematic searching for and solving possible faults.

6.1.9 Flushing the hydraulic system

Flushing the hydraulic system to attain a specified oil cleanliness class prevents faults and simultaneously increases the service life of the components. After installing the hydraulic power unit into the machine and/or after installing it with the hydraulic system, it must be ensured that the minimum requirements are met with respect to the cleanliness class of the components. Hydraulic systems in general industrial applications require a cleanliness class of 20/18/15 according to ISO 4406. Hydraulic systems with servo valves or control valves of higher quality demand a higher cleanliness class of e.g. 19/16/13.

Take the cleanliness requirement for the components as specified on the manufacturers' data sheets into consideration when determining the required flushing target.

Preparation:

- A supply of replacement or flushing filter elements available.
- A supply of additional material for piping and hose assemblies for establishing flushing loops and/or shorting links.
- Supply of flushing plates or directional valves.
- On a case-by-case basis: flushing fluid (see following note)

The same fluid as the one that is also to be used later for operating the hydraulic system can be used for flushing. When another oil is used it must be compatible with the operating medium intended to be used with the hydraulic system, as well as with the materials and particularly seals used in the hydraulic system. A maximum admissible residual amount of flushing liquid in the operating medium (e.g. 0.5 volume %) may be specified in certain circumstances (see manufacturer’s specification). In that case this has to be assured by carefully draining the flushing liquid before filling with the operating medium.

For more complex hydraulic systems with ring and branch-off lines the flushing process must be planned in detail and undertaken with care.

This is imperative when piping within the system have been welded and pickled.

The following statements assume that the flushing process is undertaken using the hydraulic power unit described in these operating instructions. When using a separate flushing unit, it is imperative to

observe the operating instructions pertaining to this unit!
For the flushing operation the hydraulic power unit must be brought to operating temperature, if possible, and is to be operated with reduced pressure settings. Make sure that any existing pressure monitoring circuits are deactivated for the flushing phase or that they are adjusted to the lower pressure settings for flushing. As far as the duration of flushing is concerned, no generalization can be made. Oil samples must be taken at periodic intervals during the flushing process and then analysed on cleanliness. Suitable sampling points to obtain a suitable oil sample include e.g. the return line upstream from any existing return line filter. Based on the cleanliness test results a decision must be made as to whether the flushing operation can be stopped (once the target cleanliness level has been attained) or has to be continued.

The operating pressure must only be set at the pressure valves intended for that purpose.

Never change the setting of sealed valves or valves with a fixed factory setting.

After completing the flushing process it must be ensured that the operating settings of the hydraulic power unit have been restored, that any flushing connections have been dismantled and connection lines sealed so as to be pressure-tight. When flushing plates are replaced with the original valves again these are to be installed according to manufacturer specification.

6.1.10 Most frequent errors during commissioning

- The fluid tank is not checked on pollution or remaining residue.
- The system is filled with unfiltered oil.
- Pressure relief valves are set too close to the working pressure (closing pressure difference is not being observed).
- Pressure controllers of hydraulic pumps are set higher than or equal to that of the pressure relief valve.
- Abnormal pump noises are not being observed or are ignored (these noises could indicate e.g. cavitation, a leaky suction line or too much air in the oil).
- The switching hysteresis of pressure switches are not considered in the pressure setting.
- Before commissioning, the hydraulic pump and hydraulic motor housings are not filled with oil.
- The settings are not recorded/documented.
- During commissioning uninvolved personnel are staying in the vicinity of the machine.

6.1.11 Re-commissioning after extended standstill

When re-commissioning the system after an extended standstill period, proceed as follows:

- Check the oil level.
- Check the accumulator pressure on the gas side.
- Check the tightness of the hydraulic components and line couplings of the system.
- Perform switch-on procedures with increased caution.
- Bleed the hydraulic system.
- Observe the information in the operating instructions of the machine manufacturer.

7 Operation

If the hydraulic power unit is partly completed machinery intended for installation into a machine, operating information can only be provided in relation to the complete machine. For this refer to the machine manufacturer's operating instructions. Information on the functional operation of the hydraulic power unit can be obtained from the product-specific documentation.

If the hydraulic power unit is provided with its own hydraulic or electric controls, refer to the separate product specific operating instructions.

8 Maintenance

Doedijns offers a wide range of services for (preventive) maintenance and repair on hydraulic power units. Contact Doedijns for more information (www.doedijns.com).

Maintenance tasks (inspection, service, repair) must be defined in terms of component-specific requirements, operating conditions (pressures, temperatures, ambient conditions) and use (duty cycle, cycle times, shift operation.
Please refer to the operating instructions of the machine manufacturer.
Within this framework, a visual inspection is to be undertaken to detect obvious faults:

- Incomprehensible notes or warning signs
- Leaks
- Loose and/or missing components
- Indication of the application of external force

8.1 Maintenance documentation

It is recommended that the results of inspections and the derived measures are documented, so that service intervals can possibly be adjusted to the actual operating conditions. This also provides the possibility of early fault recognition thanks to comparative evaluation (preventive maintenance).

Any negative trend of the test parameters (e.g. oil temperature, replacement intervals of filter elements or noise) may be an indication of changes. The troubleshooting matrix (see chapter 13) may provide help in mitigating any problems.

Gradual temperature increases and/or shorter filter replacement intervals may be an indication of possible wear at pumps, seals and aging of the oil and means that an inspection should be undertaken of all components under consideration.
An immediate high temperature increase is an alarm signal and requires an immediate inspection of the hydraulic power unit.

8.2 Cleaning

Penetrating dirt and liquids will cause faults!

Safe function of the hydraulic power unit/components is then no longer ensured.

- Always ensure absolute cleanliness when working on the hydraulic power unit.

Damage to the surface from solvents and aggressive cleaning agents!

Aggressive detergents may damage the seals on the hydraulic power unit and make them age faster.

- Never use solvents or aggressive detergents.

Damage to the hydraulic system and seals!

The water pressure of a high-pressure cleaner can damage the hydraulic system and seals of the hydraulic power unit.

- Do not use a high-pressure cleaner.
- Cover all openings with the appropriate protective devices in order to prevent detergents from penetrating the hydraulic power unit.
- Check that all seals and electrical plug connections are firmly fitted to prevent the penetration of detergents.

8.3 Inspection, maintenance, repair

Recommendations are based on a Central European climate and an environmental load as is usual in the heavy duty industry.

Before commencing the inspection the hydraulic power unit must be cleaned when necessary. Always ensure absolute cleanliness when working on the hydraulic power unit.

8.3.1 Filling level

The filling level should be checked at intervals of 8 operating hours. While the hydraulic power unit is in operation, the oil level will not remain constant. Level changes result from the different volume requirements of plunger and differential cylinder and/or the absorption/delivery of oil in hydraulic accumulators during a working cycle. Due to these variable conditions a complete working cycle of the machine must be observed when undertaking the visual inspection of the oil level and to be able to determine whether oil needs to be refilled and if so by how much.
During operation the oil level must neither exceed the upper (maximum) mark nor fall below the lower (minimum) marking. If the oil level is below the minimum marking there is a risk of pump failure due to cavitation and/or dry running. If the maximum filling level is exceeded this may have been caused by the thermal expansion of the oil or by fluid entry (e.g. water in the case of internal leakage of an oil/water heat exchanger.

The hydraulic power unit can be equipped with an electrical level indicator. In that case switching points or transmitter alarm settings can be obtained from the product-specific documentation.

Measures to be taken if the maximum filling level is exceeded:

- Expansion due to temperature increase (Approximate determination: Δ V = Thermal expansion coefficient x Δ T).
  - Correct the filling level.
- Exceeding the maximum filling level due to suspected water ingress.
  - Close the water valves (shut-of the cooling water supply).
  - Draw an oil sample at the lowest point of the tank and check for water content.
  - If suspected water ingress is confirmed, complete the machine working cycle and then shut down the machine safely.
  - Repair the oil/water heat exchanger according to the manufacturer's specifications or replace if necessary.
  - Perform more extensive control measures and implement the following measures depending on these results:
    - Clean or drain and change the oil
    - Undertake a flushing process, if necessary
    - Check the oil for admissible water content

Measures to be taken if the minimum filling level is undershot:

Risk of personal injury and damage to property from oil loss!

An oil loss is always associated with leakage.

- First identify and remedy the actual cause of the leakage.
- Only then refill the tank to a correct level.

8.3.2 Oil temperature (optional)

The oil temperature should be checked at intervals of 8 operating hours.
The hydraulic power unit may be equipped with an optical thermometer or electrical temperature measuring device (depending on the product specification). In case of the latter, switching points or transmitter alarm settings can be obtained from the product-specific documentation.

Possible causes of a temperature increase include:

- Malfunctioning of the heat exchangers
- A change in the cooling water conditions
- Malfunctioning or incorrect setting of pressure valves (e.g. maximum pressure limitation, pump controller, pressure relief valve)
- Malfunctioning of the heating system
- Fault at the pump (wear, increased leakage)
- A change in ambient conditions (e.g. increased ambient temperature)
- A change in load conditions at the drives

In the case of an inadmissible temperature increase the causes are to be determined and rectified.

8.3.3 Filter clogging indicator (optional)

The contamination level of the filters should be checked at intervals of 8 operating hours.
Optical contamination indicators are used as standard. An inadmissible back/differential pressure is indicated with an optical signal, e.g. a red pin becomes visible.

After a cold start, the red pin on the filter clogging indicator is to be pushed in after the operating temperature has been reached (check function). If the pin jumps out again immediately the filter element must be replaced at the end of the shift at the latest.

Filters may be equipped with an electrical contamination monitoring instrument. In that case switching points or transmitter alarm settings can be obtained from the product-specific documentation.

You should pay close attention if the filter clogging indicator still does not indicate that a replacement is necessary after several inspection intervals. Of course this may be an indication that the oil is clean. It may however also be due to the following reasons:

- The filter clogging indicator is defective.
- The filter element is defective.
- A bypass valve, if present, does not close properly (e.g. due to penetration of dirt particles).

Plan and carry out a filter inspection (and if necessary a replacement) at the end of the shift.
Replace each filter element in the hydraulic power unit, independent of any contamination indication, at least once every year.

If the intervals between necessary replacement of filter elements become shorter this is a sign for an increase of pollution in the system. It is then imperative that the reason for the increased deposition of dirt is to be identified and remedied.

Risk of injury from falling parts!

Depending on filter size, the filter housings may be heavy to handle.

- If necessary, ask a second person for help.

Before commencing filter element replacement work provide for receptacles for oil spill, the filter housing and the old filter element. When disassembling and assembling the filter element refer to the operating instructions of the filter element manufacturer.

Old filter elements must be disposed according to the national or operator specific regulations.

8.3.4 Pressure values

Pressure values must be checked if the behaviour of drives changes (e.g. cycle time extension, end product quality, etc.). At least a check of pressure values is recommended every six months.
It is recommend to record the pressure values within maintenance documentation.
Lead seals, e.g. on the accumulator safety valves provide information that the original pressure setting has not been changed. The sealed valves cannot be checked within the scope of a normal inspection without attaining the set pressure. Therefore the inspection of such valves comprises a check to ensure the lead seals are still intact. If the lead seal is defective or removed, pressure settings may be changed. In that case contact the manufacturer.

8.3.5 Oil maintenance

An oil analysis should be performed at least once every year.
An oil analysis entails drawing a sample of oil in a professional manner. The oil sample must be analysed in a suitable laboratory in accordance with the oil manufacturer's specifications.
Depending on the results it may be necessary to implement more measures, e.g.:

- Filtration (measures)
- Dehydrogenation
- Changing the oil

The use of recycled oil (recovered oil) is to be avoided.

If the oil must be changed the system must be drained completely (see also paragraph 9.1 “Preparing for decommissioning”).
Ensure that also all lines and actuators within the system have been completely drained.
Bleeding actions have to be carried out if necessary.
As with the initial filling, the hydraulic system must be bled after each subsequent refill.

8.3.6 Hydraulic accumulators

Risk of personal injury and damage to property!

Accumulators are a potential source of hazards. Gas leakage may result in serious injury or even death. Particular care must be taken when working on hydraulic systems with accumulators as inappropriate behaviour may result in serious injury.

- Never perform welding or soldering work or any mechanical processing on accumulators!

Risk of personal injury and damage to property!

If air or oxygen is used as an accumulator medium, there is a high risk of explosion! If uncleaned gases are used, the contaminating substances contained therein or the water content may lead to unforeseeable and uncontrollable behaviour of the device.

- Only use high purity 99,99% Nitrogen (grade 4.0) as gas in accumulators!

Risk of personal injury and damage to property!

When draining the nitrogen from the accumulator the atmospheric oxygen will be displaced. In very small of not properly ventilated rooms this may result in fainting or even suffocation.

- Before discharging the nitrogen accumulator pressure the doors and windows of the room in which the accumulator is located must be opened.
- Do not stand in the direct vicinity of the gas relief point.

Risk of personal injury and damage to property!

The draining of the nitrogen from the accumulator may result in an excessive increase in pressure.

- Before discharging the nitrogen accumulator pressure, the doors and windows of the room in which the accumulator is located must be opened.

Risk of injury!

Due to the fast discharge of the gas pressure the components and component parts affected will be subjected to extreme cooling. In extreme cases contact with unprotected skin may result in supercooling in the form of burns!

- When discharging accumulators wear thermal gloves and avoid contact with supercooled components. Wait for a reasonable period of time until the supercooled components have reached ambient temperature again!

In order for the accumulator to function as intended, the gas pre-charge pressure is to be checked periodically according to the information on the product specific hydraulic circuit diagram.
Note that the gas pressure is temperature depended. The pressure should be compared against the actual ambient temperature at that moment.

In the same regard the ambient temperature must be observed carefully when re-filling or pre-charging an accumulator. Ensure that the correct set point is derived for the applicable ambient temperature so that at increasing temperatures the admissible accumulator pressure is not exceeded.

For maintenance the relevant stipulations of ISO 4413 (paragraph 7.3.2.2) in its current version must be observed, as well as those in the operating instructions of the accumulator manufacturer.
Furthermore there are legally prescribed inspections for accumulators which have to be undertaken at defined intervals. Adhering to these inspection is the responsibility of the operator.

Service, maintenance and/or replacement of hydraulic accumulator components may only be carried out by sufficiently trained personnel (see paragraph 2.6 “Obligations of the operator”) on the basis of written instructions and using by the manufacturer approved and certified parts and materials.
Only testing and filling devices and procedures that are recommended by the accumulator manufacturer may be used.

Ensure that the gas valve is securely closed after each inspection or adjustment.

Before dismantling hydraulic accumulators both the pressure on the liquid and gas side of the accumulator must be reduced to ambient pressure (i.e. the accumulator must be in a complete depressurized condition).

8.3.7 Hose assemblies and compensators

Hose assemblies and compensators consist of an elastic part (hose or diaphragm) and fittings mounted on both sides.

Hose assemblies and compensators are components requiring constant monitoring. They should be replaced immediately if one of the following conditions are determined during inspection:

- Damage of the outer layer down to the core (e.g. abrasion points, cuts or cracks).
- Visible traces of overheating or fire, being: carbonization, blistering or fouling due to partial heat impact (hot spots).
- Embrittlement of the outer layer (formation of cracks in the elastic part).
- Deformation not corresponding to the original shape of the components in both depressurized and pressurized condition.
- Leaks.
- Damage or deformation of the fitting (sealing function impaired).

- Corrosion of the fitting, reducing function and stability.
- Hose working loose from the fitting.
- Storage time and service life are exceeded.

8.3.8 Piping & tubing

Piping consists of the pipes and the connection elements. Connection types are:

- Form-type fitting
- Flare-type fitting
- Welded conical fitting
- Compression joint
- Flange connection

The piping must be checked at least once every six months (or more frequently depending on operating conditions and use). In order to allow for a proper visual inspection prior cleaning may be required. Piping must be inspected on:

- **Corrosion** - If there are signs of corrosion the component must be checked for damage and must be assessed with respect to further reliable use. If necessary, this component must be replaced or repaired in a professional manner. In all cases provide for corrosion protection.
- **Crack formation** - In case of crack formation or leaks at welded seams, the cause has to be determined and remedied. The components concerned are to be replaced or repaired in a professional manner.
- **Leaks** - In case of leaks at fittings of flanges, the connections must be re-tightened once and this must be recorded. If leaks at these fittings remain the connections must be carefully checked for the cause of the leakage. Seals may need to be renewed and/or fitting or flanges may need to be replaced.
- **Indication of the application of external force** - If there are signs of an application of external force the cause must be determined and remedied. The component and also adjacent pressurized components must be checked for damage and assessed with respect to further reliable use. If necessary components must be replaced or repaired in a professional manner.

8.3.9 Oil coolers

The following type of coolers may be installed on the specific hydraulic power unit:

- Oil-water cooler

  If the cooling power of an oil-water cooler is reduced, follow the manufacturer's operating instructions. When water filters are used in the cooling water circuit, the water filter elements must be checked at least once every six months and cleaned if necessary.

- Oil-air cooler

  When using oil-air coolers, the fan and lamellas must be checked regularly for contamination and cleaned if necessary.

8.3.10 External inspection of tanks and steel components

The external inspection is a visual inspection and must be undertaken at least once every six months (or more frequently depending on operating conditions and use).
In order to allow for a proper visual inspection, prior cleaning may be required. Equipment must be inspected on:

- **Corrosion** - If there are signs of corrosion the concerning component must be checked for damage and must be assessed with respect to further reliable use. If necessary, component must be replaced or repaired in a professional manner. In all cases provide for corrosion protection.
- **Crack formation** - In the case of crack formation or leaks at welded seams, the cause must be determined and remedied. The components concerned must be replaced or repaired in a professional manner.
- **Leaks** - In the case of leaks at components screwed into the tank the latter are to be re-tightened once and this must be recorded. If leaks remain at this point, it must be carefully checked for the cause of the leakage. Seals may need to be renewed and/or component may need to be replaced.
- **Dents due to the application of external force** - If there are signs of an application of external force the cause must be determined and remedied. The component concerned and also adjacent components must be checked for damage and must be assessed with respect to further reliable use. If necessary, components must be replaced or repaired in a professional manner.
  If there are signs of an application of external force on the tank, an internal inspection of the tank should be undertaken.

8.3.11 Internal inspection of the tank

The internal inspection is a visual inspection of the inside of the oil tank and is generally performed when the oil is changed. Oil change frequency depends on the result of the oil samples taken.
In order to perform the visual inspection, first the tank must be completely drained (see also paragraph 9.1 “Preparing for decommissioning”). If there is any contamination, internal cleaning must be carried out. The tank must be visually inspected on:

- **Corrosion** - If there are signs of corrosion the concerned location must be checked for damage and must be assessed with respect to further reliable use. If necessary, the tank must be replaced or repaired in a professional manner. In all cases provide for corrosion protection.
- **Crack formation** - In the case of crack formation or leaks at welded seams, the cause must be determined and remedied. The welded seams concerned are to be repaired in a professional manner.
- **Foreign bodies** - If foreign bodies are detected they are to be removed from the tank. Their origin and the cause of their presence must be established. Suitable measures must be introduced to ensure a safe operation of the hydraulic power unit.
- **Screw connections** - Check whether screw connections are tight. This includes fittings and flange connections. Tighten loose parts where necessary.

Particular characteristics with walk-in tanks
Prerequisite: the inspector must not suffer from claustrophobia and must be physically fit enough to move around in a confined space.
Recommendation: Before commencing the work inside a tank inform the fire department and/or a first aider/paramedic to ensure that they are on standby.
If the inspector has to move his whole body completely into the oil tank, he must be suitably harnessed and secured by at least a second person outside the oil tank.

Preparation
For his own safety, the inspector must:

- Prepare means of rescue before entering the tank
- Take of watch and jewellery
- Wear a cap or a hair net
- Wear protective clothing (tight-fitting overall with zips and no outside pockets)
- Use a lamp suitable for explosive atmospheres

Risk of personal injury and damage to property!

There is a risk of suffocation inside tanks. The breathable air in a tank must contain sufficient oxygen for it to remain breathable for the relevant personnel without posing any risks.

- Before entering the tank open all manholes and access openings.
- Ensure sufficient ventilation with breathable air, if necessary by means of forced ventilation.

8.4 Spare and wear parts

Risk of personal injury and damage to property due to the use of incorrect spare parts!

Spare parts not complying with the ones listed in the product-specific documentation may cause mechanical hazards or malfunctioning of the machine.

- Only use components listed in the product-specific documentation (parts list).
- Only use new seals with the required resistance to the medium.
- Check material numbers, sealing material may differ despite being of identical appearance.

9 Decommissioning

9.1 Preparing for decommissioning

Provide for an oil collecting tank that is large enough to accommodate the total oil volume to be drained. The total volume of the hydraulic power unit comprises the volumes of the tank, accumulators, the line system and connected drives.
Observe the related instructions for the complete machine. Unless otherwise specified in the operating instructions of the complete machine, the following steps must be taken:

- Avoid danger caused by adjacent machines.
- Do not allow uninvolved persons to remain in the concerned area.
- Loads should be lowered or safely supported.

9.2 Decommissioning the hydraulic power unit

- Switch of the electrical power and ensure that it is locked so that it cannot be switched on unintentionally.
- Switch of and secure the hydraulic pressure supply.
- Depressurize the accumulator on both the oil and gas side.
- Drain the oil into the collecting tank provided. Ensure complete draining of also all lines and drives and actuators. If necessary, carry out bleeding measures.
- Decommission the machine as described in the overall machine instructions.

10 Disassembly

Only disassemble the component parts as far as is necessary to undertake the required work. As a basic principle, all disassembled parts should be professionally reassembled at their intended place.

10.1 Preparing for disassembly

Serious injury due to the hydraulic power unit falling over or from uncontrolled movements!

When the unit is full, movements of the oil will cause displacement of the centre of gravity, which may result in the hydraulic power unit losing its stability.

- Before dismantling, drain the oil from the hydraulic power unit as described in chapter 9 “Decommissioning”.

Serious injury due to the hydraulic power unit falling over or from uncontrolled movements!

- Ensure sufficient stability of the hydraulic power unit.
- Only loosen the fixing bolts of the hydraulic power unit, if applicable, when stability has been ensured in another way.

Serious injury or even death when undertaking the disassembly under pressure and with electrical voltage applied!

If the hydraulic system is not depressurized, high-pressure oil will leak while dismantling. If the electrical voltage of the system is not switched off, there is a risk of electric shock.

- Ensure that the relevant parts of the hydraulic system are depressurized and de-energized.

Danger to life due to tumbling, falling or uncontrolled movement of the hydraulic power unit when using unsuitable attachment points!

After a longer period of use, the attachment points may no longer be in place, or sufficiently stable or no longer identifiable as such more.

- Refer to the product-specific documentation for the intended lifting points and only use the ones mentioned there.
- Check the stability of the lifting points if you intend transporting the hydraulic power unit after dismantling.
- Replace missing and/or defective lifting points, if possible. This work should be carried out in a professional manner.
- Insert the screw-in lifting points into the tapped hole and hand tighten fully.
- If necessary, mark the unrecognizable lifting points using easily visible colour.

Ensuring safety:
Always observe the related instructions for the complete machine. Unless otherwise specified in the operating instructions of the complete machine, the following steps must be taken:

- Complete the decommissioning as described in Chapter 9 of these operating instructions.
- Do not allow uninvolved persons to remain in the concerned area.

10.2 Disassembling the hydraulic power unit

- For disassembly the work steps as described in chapter 5 “Installation” must be followed but in reverse order.
- Despite prior draining of the oil some oil will still seep out of the hydraulic (line) system. All outlets must therefore be closed using suitable plugs.

After disassembly is complete, observe the information in chapter 4 for safe transportation of the product.

11 Disposal

Careless disposal of the hydraulic power unit, its components and the oil can lead to pollution of the environment. Therefore observe the following points:

- Dispose of the product/components in accordance with the national regulations in your country and/or your company-internal specifications.
- Dispose of oil according to the currently applicable safety data sheets.

12 Extension and conversion

The operator of the product bares the sole responsibility for any extensions to or conversions of the product that are executed by the operator and change the design and/or condition of the product as supplied.
Any statements made by Doedijns regarding the product will then become invalid.
The hydraulic power unit is a partly completed machine in terms of EU Machinery Directive 2006/42/EC. For the product a declaration of incorporation is issued. In the case of extensions to or conversion of the hydraulic power unit this declaration will become invalid. The operator then becomes responsible for complying with all requirements arising from the EU Machinery Directive or any other European Directive for the modified unit.

13 Troubleshooting

Risk of personal injury and damage to property!

Depending on the system, troubleshooting may give rise to a wide range of potential hazards.

- Troubleshooting must only be undertaken when the safety equipment is active.
- Proceed with extreme caution if safety equipment has to be deactivated in order to be able to search for errors/faults. If possible, operate the machine in set-up mode with reduced performance when identifying faults.

Successful troubleshooting within a hydraulic power unit requires precise knowledge of the set-up and the mode of operation of the individual components and the total system. A combination of hydraulic and electrical systems and electronics makes troubleshooting even more complex. For effective troubleshooting, the hydraulic and electrical circuit diagrams, parts lists and any functional diagrams and descriptions must be available.

13.1 How to proceed with troubleshooting

Always work systematically and focused, even when under time pressure. Random and imprudent disassembly and readjustment of settings can, in the worst-case scenario, result in the inability to determine the original cause of the fault.

- First get a general idea of how the hydraulic power unit works in conjunction with the entire system.
- Try to establish whether the hydraulic power unit was working properly in conjunction with the entire system before the problem first occurred.
- Try to determine any changes within the entire system into which the hydraulic power unit is integrated.
- Were any changes made to the operating conditions or operating range of the hydraulic power unit?
- Were any changes or repair work undertaken on the entire system (machine/system, electrics, controls) or on the hydraulic power unit?
- Was the hydraulic power unit or machine used as intended?
- How did the malfunction become apparent?
- Try to get a clear idea of the cause of the fault.
- If necessary, ask the actual (machine) operator

13.2 Overview of the impact of defects

The following tables contain errors/faults and their consequences, the causes of which are not exclusively attributable to the hydraulic power unit. The listed error sources, possible causes and remedies refer exclusively to the hydraulic power unit. Also frequently look at the control system or connection technology when seeking the causes of faults.
The following list is meant as an aid but does not claim to be comprehensive.

Tabular classification of the impact of defects:

A. Excessive / abnormal noises
B. Insufficient power / torque / pressure in the drives
C. Irregular drive movements (pressure and volume fluctuations)
D. Operating or oil temperature too high
E. Contaminated oil

Table 13.1 Impact of defect A : Excessive / abnormal noises

#	Part	Possible cause	Action
1	Suction conditions	Oil level in the tank is too low	Check and remedy the cause of the oil loss, top up the oil.
		Breather filter contaminated or too small	Clean or replace breather filter.
		Valve in suction line is only partially open	Fully open the valve.
		Suction line plugged, not tight	Clean, seal the suction line.
		Suction filter plugged or too small	Clean or replace suction filter. Note: In compliance with EN ISO 4413:2008-07,the use of suction filters is not recommended.
		Location over 1000 m above sea level	Provide for structural changes after consultation with Doedijns.
2	Pump	Pump seals or the pump itself defective	Replace pump seals or the pump according to the manufacturer specifications.
		Vibrating controller system, e.g. pressure controller	Check for sufficient bleeding and correct basic setting of the controller according to the manufacturer specifications.
3	Pressure valves	Flow noises and vibrations due to wrong setting	Check and, if necessary, correct settings acc. to the product specific specifications.
4	Oil	Viscosity too high (temperature too low)	Before starting the machine function, temper the hydraulic power unit; if necessary, use oil of a lower viscosity class.
		Oil foams (proportion of air too great)	Check and remedy the cause of the ingress of air.

Table 13.2 Impact of defect B : Insufficient power, torque or pressure at the drives

#	Part	Possible cause	Action
1	Pressure valves	Operating pressure setting too low	Check and, if necessary, correct settings acc. to the product specific specifications.
2	Directional valves	Incorrect spool position (e.g. pressureless circulation; valve does not switch)	Check for jammed plug-in connection and correct current feed of the solenoid.
3	Piping and hose assemblies to a drive	Pressure loss too high due to incorrect dimensioning	Replace the piping and hose assemblies with ones with larger nominal widths.
4	Other	Total values for flow- and load resistance and/or leaks too large	Check the hydraulic design after consulting with Doedijns

Table 13.3 Impact of defect C : The pump is switched on or off too frequently

#	Part	Possible cause	Action
1	Pump	For machines with accumulators, the pump delivery volume is too low.	Check the design of the pump/accumulator circuit; enlarge the pump or accumulator if necessary.
2	Accumulator	The accumulator valve is closed	Check the accumulator valve position.
		The gas pre-load pressure is not correct	Check the gas pre-load pressure and, if necessary, correct the pre-load pressure.
		The operating and set pressures (of e.g. pressure switches/transmitters) do not comply with the requirements.	Check and, if necessary, correct settings acc. to the product specific specifications.

Table 13.4 Impact of defect D : Oil temperature too high

#	Part	Possible cause	Action
1	Pump	Partial load operation of the machine, pump delivery volume cannot be adjusted in the case of fixed displacement pumps	Check the hydraulic design after consulting with Doedijns.
2	Pressure relief valve	Incorrect setting of pressure relief valves, usually too low. Part of the pump delivery volume flows back to the tank via a pressure relief valve.	Check and, if necessary, correct the settings according to the product specific specifications.
3	Heat radiation	Insufficient heat dissipation due to too little oil in the tank	Check the oil level in the tank and, if necessary, refill the tank.
		Insufficient heat radiation due to encapsulation or lack of ventilation	Provide for forced ventilation if necessary.
4	Heat exchanger	For oil/water heat exchangers: - Too little flow of cooling water - Temperature of cooling water too high - Too little cooling water in the system - Inlet pressure too low - Deposits in the heat exchanger	Check whether the coolants (water, air) comply with the requirements of the technical specification.
		For oil/air heat exchangers: - The air flow is impaired - Ambient temperature too high	Check whether the heat exchanger operates within the requirements of the technical specification.
5	Other	Increased reduction in efficiency due to changed conditions, also wear.	Perform maintenance work, replace components if necessary.

Table 13.5 Impact of defect E : Contaminated oil

#	Part	Possible cause	Action
1	Particulate contamination	- Deposition of dirt due to insufficiently cleaned components (e.g. piping) during installation. - Deposition of dirt during the filling of oil - Deposition of dirt due to improperly undertaken maintenance and repair work - Ingress from the environment, e.g. via piston rods, breather filters - Abrasion of components	- Determine the causes of particle contamination - Rectify the causes - Flush the hydraulic system
2	Water in the oil	Corrosion of an oil/water heat exchanger due to water quality deviating from the heat exchanger material specification.	Examine the water quality, replace the heat exchanger if necessary.
		Pressure surges on the cooling water side of an oil/water heat exchanger.	Lock valves must only be arranged in the cooling water supply line.

14 Technical data

For technical data refer to the product-specific documentation.

15 Glossary

Assembly	An assembly comprises two or more components and/or sub-assemblies that are preassembled in a suitable form (also see hydraulic assembly).
Attachment devices	Attachment devices are separate devices used to bridge the connection between a crane and a load in order to lift the latter. Attachment devices are e.g. lifting straps, belts, chains or spreader beams
Component	Any part with a (partial) function in the sense of the technical overall system. Components in the hydraulic system include e.g. valves, filters, cylinders, hydraulic connection elements, etc..
Danger	Potentially occurring event having a detrimental impact on life and/or body.
Danger area, hazard area	Any area in a machine and/or around a machine in which a person may be exposed to a dangerous or hazardous situation.
Decommissioning	Preparation for an extended standstill of the device/system with the options for re-commissioning or disassembly.
Drive (actuator), hydraulic	Component converting the hydraulic energy of the oil into mechanical energy / movement (e.g. hydraulic motors, cylinders).
Extended standstill	Shutdown for e.g. several weeks.
Floor conveyors	Floor conveyors are means of transport for the horizontal transport that are mostly used within the company at ground level.
Hazard	Potential source of damage.
Hydraulic accumulator	Gas loaded pressure tank: Bladder-type accumulator, diaphragm-type accumulator and piston-type accumulator.
Hydraulic assembly	Hydraulic assemblies include e.g. valve stands, accumulator stations, motor-pump sets, hydraulic pump unit, circulation stations for filtration or cooling. Hydraulic assemblies are not covered by the scope of EC Machinery Directive 2006/42/EC and therefore do not constitute partly completed machinery.
Hydraulic fluid	Generally valid designation for hydraulic fluids in hydraulic systems; in these operating instructions, the term “oil” is used in line with actual practice.
Hydraulic power unit	A hydraulic power unit is the drive system for hydraulic machines. The hydraulic power unit constitutes partly completed machinery in terms of the EU Machinery Directive 2006/42/EC. Drives are explicitly not regarded as components of the hydraulic power unit. The term “hydraulic system” describes a combination of hydraulic power units, assemblies or components that are only set up and connected hydraulically at the place of use. A hydraulic system is basically part of a machine. A hydraulic system itself, however, does not constitute a machine.
Hydraulics (fluid technology)	Transfer, control and distribution of energy using a pressurized fluid medium.
Injury	Physical injury or damage to health.
Leak	A leak is the unwanted outflow of any liquid from the closed hydraulic line system and/or the pressurized components, which is sufficient to form a drop.

Lifting points	Lifting points are fixtures in the form of lugs that are connected to the load by means of welded or screw connections. They are used to lift or secure the load during transport.
Lifting tool	Devices and equipment for lifting loads, e.g. bridge cranes, gantry cranes, winches.
Line system	Any combination of lines (hoses, piping or bores) and hydraulic connection elements allowing for the intended flow of the oil between tanks, pumps, valves, accumulators, actuators, filters, etc.
Machinery	Definition taken from the EU Machinery Directive 2006/42/EC: "Machinery" is "*an assembly of linked parts or components, at least one of which moves, joined together for a specific application.*" For the complete definition of the term "machinery", please refer to EU Machinery Directive 2006/42/EC.
Maximum operating pressure	The maximum pressure with which the hydraulic system or parts of the system may be operated under uniform (constant) conditions.
Nominal pressure	Nominal pressure is a certain pressure value assigned to a component, a hydraulic line system or a hydraulic system as designation, specifying that it belongs to a certain pressure level.
Oil	Generally valid designation for hydraulic media in hydraulic systems; in these instructions the term "oil" is used in the practical sense.
Partly completed machinery	Definition taken from the EU Machinery Directive 2006/42/EC: "Partly completed machinery" is an *"assembly which is almost machinery but which cannot in itself perform a specific application. A drive system is partly completed machinery. Partly completed machinery is only intended to be incorporated into or assembled with other machinery or other partly completed machinery or equipment, thereby forming machinery to which this Directive applies."*
Pressure	Physical unit for Force per unit area. [1 N/m² = 1 Pascal], [1 bar = 100 kPa]
Product-specific documentation	The product-specific documentation complements the "General Installation, Operation & Maintenance Instructions for hydraulic power units and hydraulic assemblies" (this document) by adding specific information pertaining to your product. The product-specific documentation includes e.g. technical specifications, hydraulic circuit diagram, parts list, general arrangement drawing(s) and a description of the functional or logic mode of operation of the product.
Safety equipment	Safety equipment means components of machinery that serve the protection of human beings from all potential dangers resulting from the machine.
System	In this document the term "system" in terms of the EC Machinery Directive 2006/24/EC is used synonymously with the term "machine".
Tank	The component in a hydraulic system that collects all the oil during operation and standstill. It is not used for storing hydraulic energy.